

FIG. 47. TYPICAL CONVECTOR CONNECTIONS

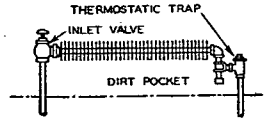

FIG. 48. TYPICAL CONNECTIONS TO FINNED PIPE CONVECTOR

low pressure or vacuum return. A typical arrangement of a flash leg, with sizes required for varying capacities, is given in Fig. 43.

CONNECTIONS TO HEATING UNITS

Riser, radiator and convector connections must not only be properly pitched at the time they are installed, but must be arranged so that the pitch will be maintained under the strains of expansion and contraction. These connections may be made by swing joints which permit the expansion or contraction to occur under heating and cooling without bending of pipes. To take care of expansion in long risers, either expansion joints of commercial construction or pipe swing joints are used. Anchoring of pipes between expansion joints is desirable.

Two satisfactory methods of making runouts for one-pipe systems for either the up-feed or the down-feed type are shown in Fig. 44. Where the vertical distance is limited and the runouts must run above the floor, the radiator may be set on pedestals or raised by means of high legs. Two methods of connecting a unit heater to a one-pipe steam heating system are illustrated in Fig. 2 (and also in Fig. 5 of Chapter 24).

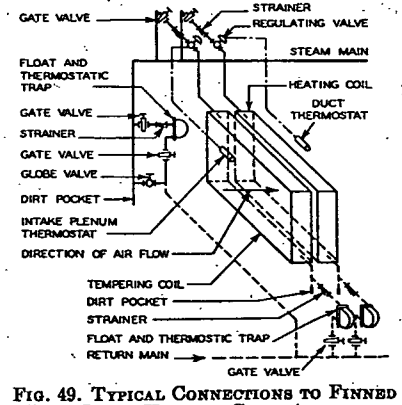

FIG. 49. TYPICAL CONNECTIONS TO FINNED TUBE BLAST HEATING COILS ARRANGED FOR SERIES FLOW OF AIR

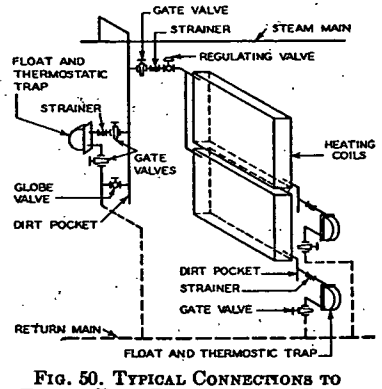

FIG. 50. TYPICAL CONNECTIONS TO FINNED TUBE BLAST HEATING COILS ARRANGED FOR PARALLEL FLOW OF AIR

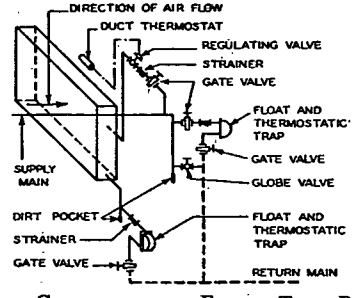

FIG. 51. TYPICAL CONNECTIONS TO FINNED TUBE BLAST HEATING COILS OF THE STEAM DISTRIBUTING OR NON-FREEZE TYPE

Typical two-pipe radiator connections are shown in Figs. 45 and 46. While these show top inlet supply connections which are preferred, it is also possible to connect the supply to the bottom of the radiator. Short radiators may be connected with top supply and bottom return on the same end.

A typical method of connecting convectors is shown in Fig. 47. Sometimes the supply valve is omitted on convector connections, and a damper is supplied in the outlet grille for heat control.

A typical connection for finned pipe convectors is shown in Fig. 48.

Typical connections to blast heaters are shown in Figs. 49, 50, and 51. Fig. 52 shows a typical return and connection for blast heaters connected to high pressure systems.

A typical two-pipe connection to a unit heater is indicated in Fig. 53.

CONTROL VALVES

Gate valves are recommended in all cases where service demands that the valve be either entirely open or entirely closed, but they should never

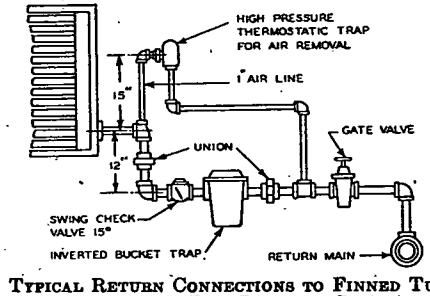

FIG. 52. TYPICAL RETURN CONNECTIONS TO FINNED TUBE BLAST HEATERS WITH HIGH PRESSURE STEAM