PLAINTIFF'S EXHIBIT

TEX-121

ADDENDUM TO THE OPERATING MANUAL

FLUID CATALYTIC CRACKING UNIT

PLANT 3B

TEXACO INC.

PUGET SOUND PLANT

ESTIMATE 3910

BECHTEL INCORPORATED

HOUSTON, TEXAS

1973

TABLE OF CONTENTS

TABLE OF CONTENTS

	Page No.
1. General Description	1
A. Introduction	1
B. Basis of Design	1
General	1
C. Description of Additions & Modifications	1
Reactor Feed Heat Section	1
2. Control Features	3
A. Principal Control Features	3
B. Reactor Feed Heat Section	3
C. Emergency Box Cooler	4
3. Preparation for Operation	5
A. Introduction	5
B. Drying the Reactor Charge Heater	5
4. Startup Procedure	8
A. Introduction	8
B. Steam Purge and Tightness Test	8
C. Pressure With Fuel Gas	8
D. Introduce Oil	8
5. Operating Variables	10
A. Introduction	10
B. Reactor Charge Heater Firing	10
C. Heater Sootblowers	10
D. Emergency Cooler	12

6. Shutting Down Procedure 13

A. Introduction 13

B. Heater Decoking 13

7. Appendix

7.1 Process and Utility Diagram

7.2 Vessel Drawings

7.3 Combustion Equipment

7.4 Heat Exchangers

7.5 Pump Data and Curves

7.6 Instrument Data

1. GENERAL DESCRIPTION

I - GENERAL DESCRIPTION

A. INTRODUCTION

This addendum to the Operating Manual for the Fluid Catalytic Cracking Unit at the Puget Sound Works of TEXACO Inc., Anacortes, Washington, covers the revamp of the FCC Unit. The principal new equipment for this revamp is:

Reactor Charge Heater

Emergency Box Cooler

Fresh Feed Pumps

B. BASIS OF DESIGN

General

The process design of the FCCU section is based on feeding 30,000 BPSD of hot fresh feed to the charge drum and feed preheat exchangers. Some 6,000 BPSD of hot intermediate recycle gas oil are combined with the fresh feed for a total heater charge of 36,000 BPSD. The heater is designed for 750°F outlet temperature. The emergency box cooler is designed for 36,000 BPSD and 200°F outlet temperature. Process flow conditions for the preheat section are shown on process flow diagram 3-RA-40.

C. DESCRIPTION OF ADDITIONS AND MODIFICATIONS TO THE UNIT

This section describes only additions and significant modifications to the FCC Unit. Reference should be made to the Operating Manual for the FCC Unit for a description of the existing facilities.

Reactor Feed Heat Section (Reference PFD 3-RA-40)

Hot gas oil from the Crude Unit and Deasphalting Unit and/or cool feed from storage are charged through the existing light gas oil-reactor feed exchanger, 3B-E4, and the existing slurry quench-reactor feed exchanger, 3B-E5 A&B. This stream is combined with the hot recycle gas oil and the combined stream is heated in the new reactor charge heater, 3B-F3. The preheated combined stream flows to the reactor feed riser.

A new emergency box cooler is provided. Activation of the pushbutton, or low pressure drop across the spent or regenerated catalyst slide valve, will cause the valve in the line to the feed riser to close, the valve in the

WA-TEX 000869

oil line to the emergency box cooler, 3B-E40, to open, and the valve in the service water to the emergency box cooler, 3B-E40, to open. Hot reactor feed will be diverted from the feed riser, through the emergency box cooler, 3B-E40, and the cooled reactor feed flows either to the hot charge drum, 3B-C23, via 3LIC-62VB, or to storage via line 3B-O-1.

WA-TEX 000870

2. CONTROL FEATURES

2 - CONTROL FEATURES

A. PRINCIPAL CONTROL FEATURES

This section describes only additions and signifcant modifications to the FCC Unit controls. Reference should be made to the Operating Manual for the FCC Unit for a description of existing controls.

Reactor Feed Heat Section (Reference P&ID 3-RA-41)

The fresh feed flow controller, 3FRC-30, and the recycle feed flow controllers, 3FRC-11 and 3FRC-302, are left in place. Since a flow controller, 3FIC-600, is provided for the combined fresh feed and recycle streams, the flow controller for the fresh feed stream, or one of the recycle feed streams, must be taken out of service and the related control valve or bypass valve placed in the full open position. The fresh feed flow controller, 3FRC-30, is, preferably, taken out of service as there is no danger of "starving" the combined fresh feed and recycle feed flow controller, 3FIC-600, with the fresh feed flow controller out of service.

Total feed to the feed riser is controlled upstream of the reactor charge heater, 3B-F3, by a master controller, 3FIC-600. The master controller, 3FIC-600, makes equal distribution of the charge to the six coils of the reactor charge heater, 3B-F3, by setting uniform rates on the individual coil flow controllers, 3FFIC-620, 3FFIC-621, 3FFIC-601, 3FFIC-602, 3FFIC-603, and 3FFIC-604. Each heater coil is provided with a low flow switch, 3FSL-620, 3FSL-621, 3FSL-601, 3FSL-602, 3FSL-603, and 3FLS-604. Low flow through any heater coil will actuate common low flow alarm 3FAL-624. A further sustained reduction in flow through any heater coil will cause the fuel supply to the heater to shut off. A momentary reduction in flow through a heater coil will not cause the fuel supply to the heater to shut off, due to the action of time delay relay 3FY-622. Bypass switches 3FHS-620, 3FHS-621, 3FHS-601, 3FHS-602, 3FHS-603, and 3FHS-604 are provided to inhibit the heater fuel shutoff function of each low flow switch. A selector switch, 3FHS-623, allows the flow through any one heater coil to be recorded, 3FR-623.

The combined oil oultet temperature from the reactor charge heater, 3B-F3, is on temperature control, 3TIC-302, by adjustment of the amount of fuel oil or fuel gas to the burners. A selector switch, 3HS-606, provides a convenient means of firing fuel oil or fuel gas, or both. In this latter case, one fuel control valve, 3PV-641 or 3FV-606, is remotely positioned by a hand controller, 3HIC-606, to set a constant firing rate, while the other fuel control valve is automatically positioned by the temperature controller, 3TIC-302, to trim the firing operation as required.

WA-TEX 000872

In the event of a power failure, the reactor charge heater outlet temperature transmitter, 3TT-302, will be powered by batteries. If the batteries should fail or weaken, the output signal from the temperature transmitter, 3TT-302, will be low and high heater firing could result. A low temperature switch, 3TSL-302, is provided to prevent this occurrence. If the output signal from the temperature transmitter, 3TT-302, is low, the low temperature switch, 3TSL-302, causes the output signal from the temperature controller, 3TIC-302, to be replaced by the output signal from the hand controller, 3HIC-302. With proper setting of the hand controller, 3HIC-302, high heater firing is avoided.

Emergency Box Cooler

Low pressure drop across the spent catalyst slide valve, PdCL-14A, or low pressure drop across the regenerator catalyst slide valve, PdCL-14B, or activation of the pushbutton will (1) close the riser inlet valve, 3PdCL-14VN, (2) close the recycle gas oil valve, 3FRC-11, (3) close the slurry recycle valve 3FRC-302, (4) open the emergency box cooler process inlet valve, 3PdCV-14VB, (5) open the emergency box cooler water inlet valve, 3PdCL-14VM, (6) open the fresh feed pump discharge bypass valve, 3PdCL-14VH, to the blowdown drum, (7) close the spent catalyst slide valves, 3PdCL-14VF and 3PdCL-14VG, (8) close the regenerated catalyst slide valves, 3PdCL-14VC and 3PdCL-14VD, (9) open emergency steam valve, 3PdCL-14VE, and (10) close slurry quench reactor feed exchangers temperature control valve 3PdCL-14VK.

A light cycly oil line is provided that ties in just downstream of the emergency box cooler process inlet line block valve, 3PdCV-14VB, to permit flushing of the emergency box cooler, 3B-E40, when not in use. Flow of light cycle oil through this line is limited by a restricting orifice, 3FO-608.

WA-TEX 000873

3. PREPARATION FOR OPERATION

3 - PREPARATIONS FOR OPERATIONS

A. INTRODUCTION

This section describes only those preparations for operations that are necessitated by the addition of the reactor charge heater, 3B-F3. Reference should be made to the Operating Manual for the FCCU for a general description of preparations for operations.

B. DRYING THE REACTOR CHARGE HEATER

The masonry in all heaters, firebrick, or refractory linings, must be dried by slow heating. Damage from cracking and expansion strains will occur if damp settings are heated too rapidly. The vendor's recommended drying procedure should be followed. An alternate procedure is given below:

1. Check that the fuel gas system has been purged, and that it is blinded or otherwise secured against leakage of gas into the heater. Remove blinds in the gas supply header just prior to lighting burners. If natural gas is available, it should be used to dry out the heater.

   If fuel gas is not available, fuel oil will be fired to dry out the heater. The fuel oil system must be thoroughly cleaned and charged with fuel oil. The fuel oil circulation should be established. Fuel oil temperature should be approximately 280°F.

2. Break flanges at the oil coil outlets, venting them to atmosphere, or otherwise provide means for venting steam from the coils to the atmosphere.

3. Blowdown condensate drains on atomizing steam lines, snuffing steam lines, and coil steam lines.

4. Purge the heater firebox with steam for at least 15 minutes, to eliminate all combustible gas from the firebox. The damper and air registers should be wide open. A steam plume should be readily noticeable from the top of the stack.

5. Light an alternate pattern of burners. During the drying period, rapid changes in temperature or highly localized temperature must be avoided. The lowest possible burner

WA-TEX 000875

flame and maximum number of burners should be used for better heat distribution, while obtaining the desired temperature. The burners should be alternated at hourly intervals, for uniform heat distribution, and the performance of all burners should be verified.

The purpose of the dryout is to eliminate water from the furnace masonry. It follows that maximum ventilation should be provided. The stack dampers should be fully open. All registers of unfired burners should be fully open.

6. During the drying period, the heater arch temperature is used as the point of regulation. Raise the heater temperature at 50 to 75°F per hour to 500°F. Maintain at 500°F for 24 hours. Increase the temperature at 50 to 75°F per hour to 750°F. Maintain at 750°F for 24 hours. Increase the temperature at 50 to 75°F per hour to 1000°F.

   At near 500°F, steam should be carefully introduced into the coils. Steam should not be introduced into the coils, particularly in vertically installed coils, until temperatures have progressed above the steam condensation temperature. Introduction of steam into cold coils will cause considerable "water hammer".

   The most accurate indication of readiness of a furnace for operation is the shell temperature. When the fires are started in a new furnace, the moisture of the outer surface of the refractory evaporates into the combustion gases, but much of the moisture held deeper in the refractory is driven back into the insulation next to the shell. During this period, the furnace shell remains cold. Then, as heat density in the combustion chamber is increased, the lining heats through and the moisture frm the insulation begins to evaporate. This causes the furnace shell to heat up by the generation of steam on the adjacent insulation. When this moisture has been thoroughly evaporated, however, the shell temperature will again fall. If the operator keeps some progressive account of the shell temperature, he will note this rise and fall during the drying out process, and when the shell temperature has decreased to the rated casing temperature, the furnace can be considered ready for operation.

WA-TEX 000876

The 1000°F temperature may be maintained for a few hours, and then gradually reduced at not more than 75°F per hour. When the heater has cooled to about 350°F, the steam to the coils may be discontinued. The burners may be extinguished at about 300°F, and further cooling continued by natural draft.

7. Upon completion of drying, the heater coils should be drained, blown out, and flanged up. Everything is left in readiness for process operation.

8. After cooling of the heater, the masonry and internals should be inspected, and repairs made if indicated.

WA-TEX 000877

4. STARTUP PROCEDURE

4 - STARTUP PROCEDURE

A. INTRODUCTION

The procedure given here is for initial startup of the reactor charge heater, 3B-F3, and commissioning of the emergency cooler, 3B-E40, with the existing FCCU in operation. Feed to the FCCU is flowing through the reactor charge heater bypass line. Reference should be made to the Operating Manual for the FCCU for a description of the startup procedure for the existing FCCU.

It is assumed the reactor charge heater, 3B-F3, and the emergency cooler, 3B-E40, have been made ready for operation as described in the preceding Section III. It is assumed that all utilities are available and ready for service.

The reactor charge heater, 3B-F3, and the emergency cooler, 3B-E40, are steam-purged, tightness-tested, and pressured with fuel gas. Reactor charge heater burners are lit on low fire. Oil is gradually diverted from the reactor charge heater bypass line through the reactor charge heater to the reactor riser. When all the oil is flowing through the heater, the feed rate and operating conditions should be adjusted to desired operating levels.

B. STEAM PURGE AND TIGHTNESS-TEST

Introduce steam through the steamout connection at line 3B-0-204-10" and through the steamout connections at each reactor charge heater pass. Purge through the reactor charge heater, 3B-F3, and the emergency cooler, 3B-E40. Vent steam and air at all high point vents. Drain condensate at all low point drains. When the system has been thoroughly purged, close vents and drains and tightness-test the system by gradually increasing the pressure to 100 psig with steam.

C. PRESSURE WITH FUEL GAS

After a successful tightness test, reduce the steam pressure to about 15 psig. Make a temporary connection and pressure the system to about 25 psig with fuel gas while all steam to the system is discontinued. Drain steam condensate from all low point drains. Make sure that all steam condensate is drained, as hot oil is to be introduced into the system.

D. INTRODUCE OIL

The emergency cooler, 3B-E40, is flushed with light cycle oil. The emergency dump system is not put into service at this time. Valving should be arranged such that if relief valve 3PSV-127A operates, it can discharge to storage.

WA-TEX 000879

Light a few burners in the reactor charge heater, 3B-F3, and bring the flue gas temperature at the arch to about 300°F. With the master heater flow controller, 3FIC-600, on manual control and the heater pass flow control valves closed, slowly open the block valve in line 3B-O-204-10" and admit oil to the heater inlet header. At this point, it should be recognized that hot oil is introduced into a wet system. The hot oil should be brought in slowly, and with caution. It must be remembered that a volume of water will expand to about 1600 volumes of steam when vaporized at 212°F and at atmospheric pressure. This vaporization takes place with violent force and, when in a closed place, is capable of causing physical damage to piping and equipment.

With the individual pass flow controllers on manual control, slowly admit oil through the heater passes, one pass at a time, to the block valve in the heater discharge header, 3B-O-213-10". Open the block valve in line, 3B-O-215-8", to the emergency cooler and permit the hot oil to flow through the emergency cooler, through the jump over from the emergency cooler discharge line to the emergency tankage (slops) header. After the system is free of water, close the block valve in line, 3B-O-215-8", to the emergency cooler and the block valve in the heater feed line, 3B-O-204-10". Open the block valve in the heater discharge line, 3B-O-219-6", and the block valve in the line to the emergency cooler and permit hot oil to back through the heater discharge line and the emergency cooler to the slops header. After the heater discharge line is free of water, close the block valve in the jump over line to the slops header and isolate the emergency cooler. Close the individual pass flow control valves.

With the individual pass flow controllers receiving their set point from master flow controller 3FIC-600, and with master flow controller 3FIC-600 on manual control, slowly start oil flow through the reactor charge heater, 3B-F3, while reducing flow through the reactor charge heater bypass. Light additional burners and adjust firing as required to maintain the oil temperature to the reactor riser. Commission the emergency dump system to the emergency cooler, 3B-E40.

When all of the oil is passing through the reactor charge heater, 3B-F3, and the heater bypass is closed, place the heater outlet temperature controller, 3TIC-302, and the heater master flow controller, 3FIC-600, on automatic control. Note that when the heater master flow controller is on automatic control, the fresh feed flow controller, 3FRC-30, or one of the recycle feed flow controllers, 3FRC-11 or 3FRC-302, must be taken out of service with the respective control valve or bypass valve in the open position. Adjust feed and recycle flow rates and operating conditions as directed by supervision.

WA-TEX 000880

5. OPERATING VARIABLES

5 - OPERATING VARIABLES

A. INTRODUCTION

Reference should be made to the Operating Manual for the FCCU for a description of the operating variables. The following discussion is limited to the reactor charge heater, 3B-F3.

B. REACTOR CHARGE HEATER FIRING

Control the combined pass outlet temperature of the heater with temperature controller 3TIC-302. This controller resets the pressure controller regulating the fuel gas supply to the gas burners of the heater, or resets the flow controller regulating the fuel oil supply to the fuel oil burners of the heater. During reduced firing rates, it may be necessary to take burners out of service to maintain the design burner fuel gas pressure to avoid burner backfiring. Maintain the burner air and firebox pressure to obtain clear burner flame and the design excess air in the flue gasses. Burner firing must be even, so that there is no flame impingement on the tubes or furnace walls. Flame impingement will cause localized hot spots, and coking or tube failure can result. Visual inspection of the tubes for hot spots must be done routinely, several times per shift.

C. HEATER SOOTBLOWERS

Electrically-driven rotary sootblowers are provided in the convection section of the reactor charge heater, 3B-F3, for cleaning the extended surface tubes during oil firing operations. Steam is used as the blowing medium. The sootblowers should be operated every 8 hours, or on indication of higher stack gas temperature, when oil is being fired. The sootblowers can be operated automatic-sequential or manually. The sootblowers are conveniently operated from the Vulcan EC-15 automatic-sequential controller.

Automatic-Sequential Operation

1. Place the start-run-stop (S-R-S) selector switch in the stop position.
2. Place the 4 toggle switches in the up (auto) position.
3. Place the steam supply selector switch in the auto position. The steam supply valve, 3PV-658, will open. The adjustable time delay (15 minutes maximum) for warmup will run out before blower operation will begin. High pressure switch 3PSH-658, downstream of the steam supply valve, must be satisfied before the sootblowers will sequence.

WA-TEX 000882

4. Place the start-run-stop (S-R-S) selector switch in the start position and hold momentarily, then release. The blowers will then operate in sequence.

5. On completion of the sootblowing cycle, the unit will shut down. Place the steam supply switch in the close position. Open the circuit breaker to remove power supply to the controller.

Individual Manual Operation

The sootblowers can be operated individually in any sequence from the Vulcan EC-15 automatic-sequential controller or from the sootblower location.

1. Perform steps 1 through 3 of the automatic-sequential operation procedure, or place the steam supply selector switch in the open position.

2. Manual operation of a sootblower from the controller is accomplished by depressing the three-way toggle switch for the desired sootblower. Blowing will stop when the selected blower completes its cycle.

3. Manual operation of a sootblower at the sootblower location is accomplished by operation of the pushbutton in the sootblower housing.

4. After manual operation, return the steam supply selector switch to the off position.

Automatic-Sequential Controller

In addition to the control and switching functions described above, the Vulcan EC-15 automatic-sequential controller has the following features:

1. A light labeled "CO" to indicate that the controller is operating.

2. A light labeled "LV" to indicate that power has been lost.

3. A light labeled "RF" to indicate that a sootblower has failed to rotate.

4. A light labeled "LHP" to indicate that the steam header has not come up to pressure.

5. A light for each sootblower to indicate operation of that sootblower.

6. An ammeter to indicate the power consumption of the operating sootblower.

WA-TEX 000883

D. EMERGENCY COOLER

Valving in the piping to and from the emergency cooler is arranged such that oil can freely flow through the cooler to storage in the event emergency valve 3PdCV-14VB opens. During periods of cold weather, steam should be utilized to prevent freezing of water in the cooler.

WA-TEX 000884

6. SHUTDOWN PROCEDURE

6 - SHUTTING DOWN PROCEDURE

A. INTRODUCTION

Reference should be made to the Operating Manual for the FCCU for a description of shutting down procedures. The following discussion is limited to the reactor charge heater, 3B-F3, and the emergency cooler, 3B-E40.

During normal shutdowns, firing of the reactor charge heater is reduced as feed rate is reduced and then discontinued. The heater is steamed out in conjunction with the remainder of the FCCU. A procedure for heater decoking is given at the end of this section.

During an emergency shutdown, firing of the reactor charge heater, 3B-F3, may be stopped by operation of emergency shutdown switch 3HS-601. Oil feed may be diverted from the reactor riser to the emergency cooler, 3B-E40, by operation of the emergency pushbutton.

B. HEATER DECOKING

The FCCU need not necessarily be taken out of service for heater decoking. The FCCU can be returned to the operating mode that was used before the reactor charge heater was installed. The reactor charge heater can then be isolated, purged with steam and decoked as described in the following paragraphs. After heater decoking, the heater is returned to service by the procedures given in Section 4.

Means are provided for steam-air decoking the tubes in the 3B-F3 reactor charge heater.

The typical decoking manifolds are shown on P&ID 3-RA-41.

Internal coke deposition may be removed from heater tubes by steam-air decoking. This is accomplished in two consecutive operations. The spalling operation is removal of coke by cracking and fragmentizing the coke by external heating of the tubes, and blowing the loosened coke from the coils. The burning operation is removal of coke by controlled combustion, (i.e., burning,) of coke with air in the presence of steam, which carries the products of combustion from the coils. The decoking procedure is described in four steps:

Preparation

Coke Spalling

Coke Burning

Cleanup

Preparation

1. The tubes are steamed free of oil, in the normal manner, at shutdown.

2. The appropriate decoking manifold arrangement is connected to the coils.

WA-TEX 000886

4. Verify that all tube hangers and guides are present and in good condition; if not, repair or replace as required before proceeding with decoking operations.

5. Verify that plant air, steam, and service water are available to the manifold.

Spalling

1. Establish service water flows as quench water to the quench drum, 3B-C40.

2. The burners shall be lighted with nonluminous flames, if possible. It is advantageous to light the fires during the afternoon, so that the burning portion of the decoking operation can take place at night when red spots on the tubes can more easily be detected. Operate with a minimum amount of excess air, so as to reduce external tube oxidation.

3. Establish steam flow through the coils. Initially, a high flow rate should be maintained to flush oil that may still be deposited on the coke. The rate will be decreased during coke spalling to prevent erosion by coke particles.

4. Increase the bridgewall temperature at a rate of approximately 300°F per hour to 1100-1150°F, with a maximum temperature of 1300°F.

5. Increase steam flow through the coil being decoked to produce a mass velocity of 18 pounds/square foot/second.

6. If spalling has not started at the above temperature, the following steps will be taken until spalling does start:

   a. Reverse the flow through the coil.

   b. Alternately decrease and increase steam flow.

   c. Lower flue gas temperature by 100-200°F.

   d. Add a small amount of air, for not more than 5 minutes, then be sure to close off the air.

7. The rate of spalling is determined by observing the quenched effluent. Spalling rate is judged by appearance of quench water stream.

   a. Light grey - containing soot or fine coke particles.

   b. Dark grey to black - containing increased size and quantity of coke.

WA-TEX 000887

8. When heavy spalling starts, decrease steam flow to prevent erosion. The amount of steam flow rate is dependent on operator's judgment; the pressure in coil inlet and observation of the effluent is the guide. As effluent darkens, steam flow is decreased and inlet pressure observed. As effluent becomes lighter, steam flow is increased and the observed inlet pressure may be a guide for flow adjustment. High velocity may produce fine dust. This is determined by reducing steam flow for 10 to 15 minutes and observing the effluent. Should find dust continue, further reduce the steam flow to make sure the dust is not produced by high velocity.

9. Continue spalling operation until assured that spalling has stopped.

Burning

1. Reduce the radiant section flue gas outlet temperature about 50-100°F.

2. Reduce the steam flow to produce a rate of 5650 LB/HR.

3. Gradually introduce air to the coils at a quantity equal to one-tenth of the weight of the steam, i.e., 5650 LB/HR. Observe the appearance of the tubes. Do not permit the tubes' temperature to exceed 1250-1300°F., i.e., dark red color. Decrease air flow, if necessary, to avoid high temperature. With a good coke burning operation, the progress of the burn can be observed by tube color. As the burning coke in the tube progresses, the tube temperature, hence red color, also progresses.

   Do not allow the tubes to attain a cherry red color. If the temperature rises, decrease the air flow.

4. After about one hour of burning, the flow is reversed. If coke burn is heavy, it is advisable to periodically increase the steam flow for short periods, to avoid plugging.

5. The effluent is observed throughout the burning operation. The appearance of the effluent during spalling and burning indicates the progress.

   a. Greyish-milky is the appearance before and after decoking.

   b. Light grey appearance indicates fine soot particles.

   c. Dark grey to black indicates larger particle size and greater volume of coke.

   d. A reddish-brown color appears during coke burning and blowing out period.

WA-TEX 000888

6. When coke burning is completed, the reddish-brown color disappears and decoking is completed.

Cleanup

1. Upon completion of coke burning, discontinue air flow.

2. Temporarily increase the steam flow to full line pressure. Hold for a few minutes, and then reverse in direction. Repeat this three or four times, to remove all loose ash and scale.

3. Maintain low steam flow and decrease firing at approximately 500°F per hour rate, as indicated by radiant section outlet flue gas. When radiant tube metal temperature has dropped to 500°F, stop steam flow.

4. At 400-450°F radiant section outlet flue gas temperature, discontinue firing. Follow plant safety practices in discontinuing heater firing. Discontinue steam to tubes.

5. Flush the tubes thoroughly with service water. A hydrostatic test of the tubes may be made following the water flush.

6. Upon completion of the water wash, the tubes are dried. Re-establish the air flow to remove water. Relight several burners to bring the radiant section flue gas temperature to around 400°F.

7. Intermittently discontinue water quench and observe the blowoff line effluent. In this manner, it may be determined when coil is dry.

8. After completion of drying, discontinue heater firing. Follow the plant safety practices in discontinuing the heater firing. Stop air flow.

9. Disconnnect the decoking manifold from the heater coils. Replace the removable normal crossovers and swingout spools. Also turn the Figure 8 blinds to normal. The heater is made ready for normal service.

WA-TEX 000889

7. APPENDIX

7. APPENDIX

7.1 Process and Utility Diagrams

7.2 Vessel Drawings

7.3 Combustion Equipment

7.4 Heat Exchangers

7.5 Pump Data and Curves

7.6 Instrument Data

7.1 PROCESS AND UTILITY DIAGRAMS

TABLE OF CONTENTS

SECTION 7.1 PROCESS AND UTILITY DIAGRAMS

P&ID	Reactor-Regenerator Section FCC Unit	3-RA-4
P&ID	Fractionation Section FCC Unit	3-RA-5
P&ID, Utility	Water System FCCU & GRU	3-RA-8
P&ID, Utility	Stm. Cond. & Boiler Feed Water FCCU & GRU	3-RA-9
P&ID, Utility	Blowdown, Pumpout & Emergency Cooling FCCU & GRU	3-RA-10
P&ID, Utility	Plt, Inst & Aeration Air, Fuel Oil & Gas FCCU & GRU	3-RA-11
Plot Plan	FCCU & GRU	3-RA-14
Process Flow Diagram	FCCU Unit Reactor Feed Heat and Emergency Cooling	3-RA-40
P&ID	Feed Preheat FCCU	3-RA-41
Plot Plan	FCCU Heater and Emergency Cooler	3-RA-42
Utility Usage Diagram	FCCU	3-RA-43
Flag Flow Diagram	FCCU	3-RA-44
Electrical Diagram	FCCU - Single Line Diagram	3-AP-24

ITEM NUMBERS

19	36"OD x .375"WALL SAW FABRICATED STEEL PIPE
312	300# SCRD. F.S. GATE VALVE
319	600# SCRD. F.S. GATE VALVE
324-15	600# SCRD. F.S. GATE VALVE, 15.88SV TRIM & STEM
310	300# WELD NECK FLANGE 316" R.F.
6310-31	300# 1160, C.S. GATE VALVE, 16" R.F., CRANE 351 OR 13, BOLTED BNT.
6317-31	300# 1160, C.S. GATE VALVE, 16" R.F., CRANE 351 OR 13, BOLTED B.E.T.
618	300# 1160, C.S. GATE VALVE, 16" R.F., PAC. 3350 OR EQ.
617	300# 1160, C.S. GATE VALVE, 16" R.F. PAC. 3350 OR EQ.
617-31	300# 1160, C.S. GATE VALVE, 16" R.F. SPECIAL
614	
1005	300# FLG. "Y" STRAINER 316" R.F.
1013	
1701	150# FLG. BELLOWS TYPE EXPANSION JOINT 316" R.F.
1770	WATER SPRAY NOZ. ASSEMBLY-STEAM DISPERSING TYPE-40 G.P.M.
1777	WATER SPRAY NOZ. ASSEMBLY-STEAM DISPERSING TYPE-15 G.P.M.
6610-31	300# FLGD. GATE VALVE, 1 CR-16 MO, 316" R.F., CRANE 142 OR EQ.
6637	300# FLGD. GATE VALVE, 1 CR-16 MO, 316" R.F., PAC-3350-1 OR EQ.
6637-31	300# FLGD. GATE VALVE, 1 CR-16 MO, 316" R.F., PAC-3350-1 OR EQ.

LEGEND

PIPING SYMBOLS

GV	GATE VALVE	CV	CHECK VALVE
GLV	GLOBE VALVE		
P.P.	PROJECTION TYPE PENETRATION		
		DG	VALVE WITH BLAST PROOF SEE DETAIL "D"
CV	CONTROL VALVE (CLOSES ON AIR FAILURE)	CV	CONTROL VALVE (OPENS ON AIR FAILURE)
SV	SAFETY RELIEF VALVE	AU	AERATION UNIT S-STEAM, A-AIR, W-WATER SEE DETAIL "A"
	INSULATED LINE & THICKNESS (INSULATION THICKNESS IN INCHES)	PU	PURGE UNIT S-SOTTANDS AIR, N-N2 SEE DETAIL "B"
	TRACING CORD & LETTER (TRACING CORD LETTER IN TRIANGLE)		INDICATING TRANSMITTER
	PIPING SELECT. LEAD		CAPILLARY TUBING

PLANT NUMBER
INSTRUMENT IDENTIFICATION
INSTRUMENT NUMBER

INSTRUMENT SYMBOLS

	LOCAL MOUNTED		TRANSMITTER MAXIMUM PRESS. TAP L.P. LOW PRESS. TAP
	BOARD MOUNTED		TRANSMITTER OR PRESSURE SWITCH BOARD MOUNTED
	PNEUMATIC LINE (SMALL DASH) ELECTRONIC AIR LINE		INDICATING TRANSMITTER
	PNEUMATIC LEAD		CAPILLARY TUBING

INSTRUMENT IDENTIFICATION

ALL INSTRUMENTS ARE CODED IN ACCORDANCE WITH I.S.A. STANDARDS EXCEPT AS NOTED

LINE IDENTIFICATION

PIPING SPEC. — LINE SIZE — PLANT NO. (BECHTEL) — PLANT LETTER (T.Y. CO.) — TEXACO SERVICE DESIG. — LINE SERIAL NO.

PIPING SPECIFICATION

J3R-3118	150# S.P., C.S. 1/8" CORR. ALLOWANCE
J3C-3118	150# S.P., C.S. 1/8" CORR. ALLOWANCE
J3T-3118	150# S.P., C.S. 1/8" CORR. ALLOWANCE
J0Y-4118	300# V.P., C.S. 1/8" & 1/16" CORR. ALLOWANCE
J3T-3116	150# S.P., C.S. 1/16" CORR. ALLOWANCE
J3T-3119	300# S.P., C.S. 1/16" CORR. ALLOWANCE
J6-3119	125# NOM. RATING, 1/16" CORR. ALLOWANCE
J0Y-6318	300# NOM. RATING, S.P., 1/16" CORR. ALLOWANCE
J0-3118	150# NOM. RATING, S.P., 1/16" CORR. ALLOWANCE

SERVICE DESIGNATION

D	HYDROCARBONS
CY	CATALYST HYDROCARBON PRESENT
Y	CATALYST NO HYDROCARBON PRESENT
A	AIR-PROCESS, PLANT, AERATION
ST	STEAM, CONDENSATE, SPRAY WATER
FG	FLUE GAS

NOTES

REFERENCE DRAWINGS

P.F.D. FCCU FRACTIONATION SECTION	3-RA-6
P.F.D. CO BOILER	3-RA-13
P.F.D. AIR BLOWERS & CATALYST STORAGE	3-RA-15
P.F.D. STEAM & CONDENSATE	3-RA-9
P.F.D. AIR, FUEL GAS, & FUEL OIL	3-RA-11
LIST OF REVISIONS TO THIS DRAWING	3-RA-16

BECHTEL - 10095 TEXACO EST. - 3910

SYMBOLS

- EXISTING
- NEW
- REMOVE
- RELOCATE
- NOT USED - DO NOT REMOVE
- DENOTES TIE-IN NUMBERS

NOTES

1. REVISIONS OF MAJOR SYSTEMS ARE DESIGNATED BY THE SYMBOLS SHOWN ABOVE, MINOR REVISIONS ARE CIRCLED AND INCLUDE A TRIANGULAR REVISION MARK.
2. PIPING SERVICE SPECIFICATION FOR NEW LINES IS IN ACCORDANCE WITH GEMS J-208, TABLE 2
3. LINE NUMBER SUFFIXES FOR INSULATION ON NEW LINES ARE IDENTIFIED AS FOLLOWS:
   - PP - PERSONNEL PROTECTION
   - CC - COLD CONSERVATION
   - PHC - PARTIAL HEAT CONSERVATION
   - FHC - FULL HEAT CONSERVATION
   - OTC - OPERATING TEMPERATURE CONTROL
   - ST - STEAM TRACED
   - NI - NO INSULATION
4. REPLACE EXISTING 10" LINE TO INLET 6" PISTON OPERATED VALVE, 3PdCL-14B WITH NEW 9 CR PIPE & VALVE - 8PdCL-14VN, EXISTING VALVE 3PdCL-14VB WILL BE INSTALLED IN EMERGENCY COOLER INLET LINE. SEE DWG. B-RA-41. (4)
5. PUSH BUTTON OR LOW PRESSURE DROP SIGNAL ACROSS THE SPENT CATALYST OR REGENERATOR CATALYST SLIDE VALVE WILL AUTOMATICALLY CLOSE INLET VALVE TO RISER AND WILL PERFORM THE FOLLOWING ACTIONS SHOWN ON DWG. 3-RA-41: OPEN PROCESS VALVE TO EMERGENCY COOLER, OPEN WATER VALVE TO EMERGENCY COOLER, CLOSE THE SLURRY RECYCLE CONTROL VALVE & CLOSE RECYCLE GAS OIL TO 3B-F3 AT 3FRC-11. (5)

LINE IDENTIFICATION

1A - 0 - 422 - 8" - 113A - N1

- 1A — TEXACO PLANT NUMBER
- 0 — TEXACO SERVICE SYMBOL
- 422 — SIZE NUMBER
- 8" — SIZE
- 113A — TEXACO PIPING MATERIAL SERVICE SPECIFICATION
- N1 — INSULATION REQUIREMENTS

FLUE GAS TO CO BOILER (4)

TOTAL REACTOR FEED INCLUDING RECYCLE GAS OIL 3B-GC-213 (4) 16"-113A-750°F-FHC

COMBUSTION AIR FROM MAIN AIR BLOWERS

NORMAL CATALYST ADDITION

STARTUP CATALYST ADDITION & SHUTDOWN CATALYST WITHDRAWAL

CATALYST CLEANUP LINE

LIFT AIR FROM LIFT AIR BLOWER

REACTOR EFFLUENT TO FRACTIONATOR

TORCH OIL

SEE NOTE "S"

TO 3PdCL 14B-B & V-N, SEE NOTE "S" (5)

TO 3PdCL 14V-N, SEE NOTE "S"

No.	DATE	TEXACO REVISIONS	BY
1	3/8/61	ADDED INST. SYM. & LEG. PER LETTER W.O.-201 (BECHTEL ADDED VALVE NO. 1800-2115, ADDED LINE NOS. PER DWG. 3-RA-41)	
2	4/6/61	REVISED 9 CR SPEC TO 5 CR	
3	4/27/61	REVISED PER DRAWING DRAFTING REVD	
4	5/5/61	ISSUED FOR CONSTRUCTION	
5	7/7/61	ADDITIONS TO LINE NUMBERS 1550BD FOR APPROVAL	

BECHTEL CORPORATION
SAN FRANCISCO

THE TEXAS COMPANY
PUGET SOUND WORKS

PROCESS PIPING & INSTRUMENT DIAGRAM
REACTOR & REGENERATOR SECTION
FLUID CATALYTIC CRACKING UNIT

BECHTEL 2525 3-RA-4 M

BECHTEL
HOUSTON

TEXACO INC.
PUGET SOUND PLANT

PROCESS PIPING & INSTRUMENT DIAGRAM
REACTOR & REGENERATOR SECTION
FLUID CATALYTIC CRACKING UNIT

BECHTEL - 10095 TEXACO EST. - 3910

3-RA-4 20A

WA-TEX 000894

LEGEND

ITEM NUMBERS

28	SCH 80 SEAMLESS PIPE
37	36" FABRICATED STEEL PIPE ⅜" WALL
155	600# SCRD. NEEDLE TYPE GLOBE VALVE
201	150# SCRD BRONZE GATE VALVE
2151-15	
333-15	600# S.W., F.E GATE VALVE
389	1500# CAST COCK, RELIANCE MODEL 202
600	150# FLGD. C.S. GATE VALVE, ¼" R.F., 11-14 CHR. TR. S.S.
602	150# FLGD. C.S. GATE VALVE, ¼" R.F. MONEL TR. & S.
607	150# FLGD. C.S. GATE VALVE, ¼" R.F. PAC. DISC OR EQ.
611	300# FLGD. C.S., GATE VALVE, ¼" R.F., CRANE 33XR
614-7-M	300# FLGD. 9 CHR. ¼ MO GATE VALVE R.T.J.
615	300# FLGD. C.S. GATE VALVE, ¼" R.F. PAC 3330-9
614-7-33	300# FLGD. 5CHR. ½ MO. GATE VALVE, OR.
745	600# FLGD. F.S. BLOWOFF VALVE, ¼" R.F.
840	
900	150# FLGD. C.S. LUB. PLUG, ¼" R.F., WR OPER.
907	150# FLGD. C.S. LUB. PLUG, ¼" R.F., GEAR OPER.
1002	
1003	300# FLGD. C.S. "Y" STRAINER, ¼" R.F.
1308	
1350	SAMPLE COOLER PER DWG 50-DL-16A
1701	150# FLGD BELLOW TYPE EXPANSION JOINT, ¼" R.F.
4310	300# F.S. LARGE DIAMETER WELD NECK FLANGE
4702	

LEGEND

PIPING SYMBOLS

	GATE VALVE		SPECTACLE BLIND 1557
	GLOBE VALVE		PLUG COCK
	CHECK VALVE		
	HAND CONTROL VALVE		
	STRAINER	T.S.	TEMPORARY STRAINER
	CONTROL VALVE AIR OR HYDRAULIC OPER.		SPECTACLE BLIND OPERATED
	CONTROL VALVE AIR OR HYDRAULIC CLOSE		ANGLE VALVE
	SAFETY VALVE		BUTTERFLY CONTROL VALVE WITH HANDWHEEL OPERATOR
			ANGLE CONTROL VALVE 3000 # AIR (MOTOR OPER) SPRING FAILURE CLOSE
			STEAM TRACED SEWER

INSTRUMENT SYMBOLS

	LOCAL MOUNTED		TRANSMITTER
	BOARD MOUNTED	SPU	PURGE UNIT (TOTAL METER) PURGING FLUID, FLUSHING OIL, FUEL GAS, AIR, ETC.
	PRESSURE LINE		ELECTRICAL LEAD
	INSTRUMENT AIR LINE		CAPILLARY TUBING

SPI — PLANT NUMBER
INSTRUMENT IDENTIFICATION
INSTRUMENT NUMBER

INSTRUMENT IDENTIFICATION

ALL INSTRUMENTS ARE CODED IN ACCORDANCE WITH I.S.A. STANDARD EXCEPT AS NOTED. FOR RELAYS REFER TO DWG. NO. 50-EA-4.

LINE IDENTIFICATION

PIPING SPEC. — SIZE — EXPANSION — LINE SERIAL NO. — TEXACO SERVICE DESIGNATION — TEXACO PLANT LETTER

FLUSHING OIL SYSTEM IDENTIFICATION

(15) — IDENTIFICATION NUMBERING OF FLUSHING OIL BRANCH FROM HEADER. SEE DETAILS THIS DWG.

PIPING SPECIFICATION

JO-51B	150# GR GATES, C.S. 1/16" CORROSION ALLOWANCE
JO-53B	150# R.F. COCKS, C.S., 1/16" CORROSION ALLOWANCE
JO-61B	300# R.F. GATES C.S. 1/16" CORROSION ALLOWANCE
JOV-61B	300# R.F. GATES, 5% Cr ½" MO. 1/16" CORROSION ALLOWANCE
JOV-C31B	300# R.F. GATES, C.S. 1/16" CORROSION ALLOWANCE
JO-51HB	150# R.F. GATES, C.S. 1/16" CORROSION ALLOWANCE
JO-53HB	150# R.F. COCKS, C.S. 1/16" CORROSION ALLOWANCE
JBF-61B	300# R.F. GATES C.S. 1/16" CORROSION ALLOWANCE
JPW-51B	150# R.F. GATES C.S. 1/16" CORROSION ALLOWANCE
JCW-52B	125# F.F. GATES C.I., 1/8" CORROSION ALLOWANCE

SERVICE DESIGNATION

O	HYDROCARBON & LIQUID OR VAPOR FUEL OIL & GAS
OT	HYDROCARBONS, CATALYST PRESENT
PW	WASTE WATER, SOUR WATER
ST	STEAM & CONDENSATE
CW	COOLING WATER
W	SERVICE WATER, TEST WATER
BF	BOILER FEEDWATER

REFERENCE DRAWINGS

PROCESS FLOW, REACTION & REGENERATION SECTION FCCU	3-RA-6
PROCESS FLOW, WASTE WATER STRIPPING SECTION FCCU	3-RA-9
UTILITY FLOW, WATER SYSTEMS FCCU	3-RA-8
UTILITY FLOW, STM. COND. & BOILER FEED WATER FCCU	3-RA-9
PROCESS FLOW, COMPRESSION SECT. FCC GAS RECOVERY PLANT	4-RA-6
PROCESS FLOW, ABSORPTION SECT. FCC GAS RECOVERY PLANT	4-RA-7
PROCESS FLOW, DIST. & TREATING SECT. FCC GAS RECOVERY PLT.	4-RA-8
FLOW, TANKAGE & INTERCONNECTING LINES SHEET NO. 2	21-RA-2
PROCESS FLOW, BLOWDOWN, SAMPLING, CARBONS	3-RA-10
LIST OF REVISIONS TO THIS DRAWING	3-RA-19
PIPING, SEAL OIL & FLUSHING OIL	4-RA-11

NOTES

1. FOR LETTER CODE FOR STEAM TRACED LINES, SEE TABLE II, SPECIFICATION M-3. USE INSULATION THICKNESS SHOWN ON LINE TABLE UNLESS NOTED
2. FOR TYPICAL WEATHERPROOFING, BY-PASS & DRAIN VALVES ON COOLING WATER SUPPLY & RETURN RISERS, SEE DWGS. 50-DL-183, & 50-DL-185.

11-29-55	FOR LIST OF CHANGES SEE DWG 3-RA-19-1					
7/16/56	FOR LIST OF CHANGES SEE DWG 3-RA-19-1	WC				
10/4/57	FOR LIST OF CHANGES SEE DWG 3-RA-19-1	WC				
8/14/58	FOR LIST OF REVISIONS SEE DWG 3-RA-19-1	SR				
10/7/59	ISSUED FOR APPROVAL	RCH				

BECHTEL CORPORATION
SAN FRANCISCO

THE TEXAS COMPANY
PUGET SOUND WORKS

PROCESS PIPING & INSTRUMENT DIAGRAM
FRACTIONATION SECTION
FLUID CATALYTIC CRACKING UNIT

BECHTEL 2525 3-RA-5 M

BECHTEL 12099 TEXACO EDT. 9910

SYMBOLS

- EXISTING
- NEW
- REMOVE
- RELOCATE
- NOT USED - DO NOT REMOVE
- DENOTES TIE-IN NUMBERS

NOTES

1. REVISIONS OF MAJOR SYSTEMS ARE DESIGNATED BY THE SYMBOLS SHOWN ABOVE. MINOR REVISIONS ARE CIRCLED AND INCLUDE A TRIANGULAR REVISION MARK.
2. PIPING SERVICE SPECIFICATIONS FOR NEW LINES ARE IN ACCORDANCE WITH GEMS J-208 TABLE 7
3. LINE NO. SUFFIXES FOR INSULATION ON NEW LINES ARE IDENTIFIED AS FOLLOWS:
   - PP PERSONNEL PROTECTION
   - CC COLD CONSERVATION
   - PHC PARTIAL HEAT CONSERVATION
   - FHC FULL HEAT CONSERVATION
   - OTC OPERATING TEMPERATURE CONTROL
   - ST STEAM TRACED & INSULATED
   - NI NO INSULATION
4. PUSH BUTTON OR LOW PRESSURE DROP SIGNAL ACROSS THE SPENT CATALYST OR REGENERATED CATALYST SLIDE VALVE WILL AUTOMATICALLY OPEN VALVE TO EMERGENCY COOLER, CLOSE INLET VALVE TO RISER SHOWN IN DWG. 3-RA-4. OPEN EMERGENCY COOLER WATER SHUTOFF VALVE, CLOSE THE SLURRY RECYCLE CONTROL VALVE AND CLOSE RECYCLE GAS OIL TO 38-FS AT STRUC-13.

LINE IDENTIFICATION

1A - O - 432 - 6" - 113A - NI

TEXACO PLANT NUMBER — TEXACO SERVICE SYMBOL — SIZE — NUMBER — INSULATION REQUIREMENTS — TEXACO PIPING MATERIAL SERVICE SPECIFICATION

WA-TEX 000895

1	7/14/59	REVISED MISCELLANEOUS ON LINES 38-GT-1, 38-GT-10, 38-GT-2 & 38-GT-3			5/6	7/6
2	7/31/59	ADDED TIE-IN 38-20-6 & 38-GT @ PUMP 38-G2			1/6	7/6
3	8-18-59	ADDED VALVE TAG NO. 607, ADDED SPEC & CODE TO REPLACEMENT INLET VALVE			2/6	7/6
4	8-28-59	REVISED PER DRAWING 3-AA-105 REV. 1				7/6
5	11/11/59	REVISED PER DRAWING 3-AA-105 - REV. 0			1/6	7/6
6	12/16/59	ISSUED FOR CONST.			1/6	7/6
7	2/24/60	UPGRADED TO 300 # AND ISSUED FOR APPROVAL			1/6	7/6

SCALE — DESIGNED — DRAWN

BECHTEL HOUSTON

TEXACO INC. — PUGET SOUND PLANT

PROCESS PIPING & INST DIAGRAM
FRACTIONATION SECTION
FLUID CATALYTIC CRACKING UNIT

BECHTEL 12099 — TEXACO 9910 — 3-RA-5 — 18A

38-0-265-8"-J15-NI

CV-104E2

CV-115H2

INTERMEDIATE GAS OIL TO STORAGE

INTERMEDIATE GAS OIL TO DEASPHALTING UNIT

EXTRACT. FRACTIONS PRODUCT TO STORAGE

LIGHT CYC. GAS OIL TO OXBOW STORAGE (COOLED)

WET GAS TO RECOVERY UNIT - COMPRESSOR 48-K1A

FRACTIONATOR OVERHEAD LIQUID TO GAS RECOVERY UNIT

RICH SPONGE OIL FROM GAS RECOVERY UNIT

SLURRY FROM GAS RECOVERY UNIT REBOILERS

SLURRY TO GAS RECOVERY UNIT REBOILERS

LEAN SPONGE OIL TO GAS RECOVERY UNIT

LIGHT CYCLE GAS OIL TO FLUSHING OIL SYSTEM & FOR START-UP

LIGHT CYCLE GAS OIL TO HYDROTREATER (UNIT)

FROM HYDROTREATER CHARGE ACCUMULATOR LEVEL TIC-1951

CUTTER STOCK TO DEASPHALTING UNIT

GAS BY-PASS FROM HYDROTREATER

COMPRESSOR BY PASS FROM GAS RECOVERY UNIT

WASTE WATER TO SURGE DRUM

TO HYDROTREATER RECORDER 7-FR-39

OVERFLOW FROM 48-C4

TO 48-C7

SLURRY HYDROCARBON FROM 48-E4

38-GT-G8A SPARE

38-GT8A TURBINE

REVISION & NOTES

1. EXTENDED LINE NUMBER 15"-50-87-10 TO 15"-50-87-11
2. REVISED LINE 36-0-13 & 38-0-34 SPEC. FROM 30-DIB TO 30-DIB
3. REVISED 3 WAY-N WATERING OF BLOCK VALVES
4. ADDED TIE-IN BEING 15"-50-87-9 FROM 12"-50-87-8 TO 15"-50-87-8
5. ADDED 3"-50-87-1 LINE TO LINE 12"-50-87-8

LEGEND

(3"-HC) DENOTES PIPING, EQUIP & INSTR. ADDED ON C-1111D

DENOTES TIE-IN NUMBERS

Stearns-Roger INCORPORATED

DRAWING STATUS

DRAWING	ISSUED AS	DATE
DRFT. RELEASE	1	10-10-60
DRFT. RELEASE	2	11-7-60
DRFT. RELEASE	3	11-21-60
ISSUED FOR APPROVAL	A	12-2-60
ISSUED FOR CONSTRUCTION	B	12-22-60

1	10-10-60	ISSUED FOR ESTIMATE SCOPE				
2	10-26-60	REVISED PER DWG. 50-DL-16A & 16B				
3	11-7-60	REVISED PER DWG. 50-DL-16A & 16B				
A	11-21-60	ISSUED FOR APPROVAL				
B	12-22-60	REVISED PIPING	RP			

6400 B
APPROVED AS FOR TEXACO CO. 12-30-60

J SR JOB N° C-1111D DWG. N° 2223 SHT. N° 03-1-05 7-9-46

LEGEND

PIPING SYMBOLS

	GATE VALVE		HYDRANT TYPE VALVE
H.R.	FIRE HOSE RACK	D.F.	DRINKING FOUNTAIN
	UNDERGROUND PIPE		
W A S	UTILITY STATION W-WATER, A-AIR, S-STEAM		INSULATION, STEAM TRACED, CODE "A"

INSTRUMENT SYMBOLS

	LOCALLY MOUNTED		
	PNEUM. LINES & ELEC. CONN.		

INSTRUMENT IDENTIFICATION

PLANT NUMBER
STW 115 — INSTRUMENT IDENTIFICATION / INSTRUMENT NUMBER

LINE IDENTIFICATION

(4"-SS-CW-1) (CW-51A)

- PIPING SPEC. (BECHTEL)
- LINE SERIAL NUMBER
- T.CO. SERVICE DESIGNATION
- PLANT LETTER (T.T.CO.)
- PLANT NUMBER (BECHTEL)
- LINE SIZE

SERVICE DESIGNATION

CW	COOLING WATER
DW	DRINKING WATER
FW	FIRE WATER
W	SERVICE WATER

PIPING SPECIFICATION

JCW-51B	100# C.S., ⅛" CORR. ALLOWANCE
JDW-51B	125# F.R. C.S. GALV.
JFW-51B	150# R.F., C.S., ⅛" CORR. ALLOWANCE

DENOTES TIE-IN NUMBERS
DENOTES PIPING, EQUIPMENT + INSTRUMENTS ADDED ON C-1111O.

REFERENCE DRAWINGS

PROCESS P&I.D. REACTOR & REGENERATION SECT. FCCU.	3-RA-1
PROCESS P&I.D. FRACTIONATION SECTION, FCCU.	3-RA-2
PROCESS P&I.D., WASTE WATER STRIPPING SECTION, FCCU	3-RA-3
PROCESS P&I.D. COMPRESSION SECTION, GAS RECOVERY UNIT	6-RA-4
PROCESS P&I.D. ABSORPTION SECTION GAS RECOVERY UNIT	6-RA-5
PROC. P&I.D. DISTILLATION & TREATING SECT. GAS RECOVERY UNIT	6-RA-6
PROCESS P.&I.D. WASTE WATER TREATMENT SECTION, FCCU	3-AA-7
PROCESS P & I D, CO. BOILER SECTION, FCCU	3-RA-13
PROCESS P&I.D. CATALYST STORAGE & REGEN. FCCU	3-RA-14
P&I.D., FIRE DOMESTIC SERVICE & COOLING WATER SYS.	22-RA-1
FIRE PROTECTION OVERALL	22-R2-1

BECHTEL #10095 TEXACO EST. 8910

SYMBOLS

- EXISTING
- NEW
- REMOVE
- RELOCATE
- NOT USED (DO NOT REMOVE)

DENOTES TIE-IN NUMBERS

NOTES

1. REVISIONS OF MAJOR SYSTEMS ARE DESIGNATED BY THE SYMBOLS SHOWN ABOVE. MINOR REVISIONS ARE CIRCLED AND INCLUDE A TRIANGULAR REVISION MARK.
2. PIPING SERVICE SPECIFICATIONS FOR NEW LINES ARE IN ACCORDANCE WITH GEMS J-205 TABLE 7.
3. LINE NUMBER SUFFIXES FOR INSULATION ARE IDENTIFIED AS FOLLOWS:

PP	PERSONNEL PROTECTION
CC	COLD CONSERVATION
PHC	PARTIAL HEAT CONSERVATION
FHC	FULL HEAT CONSERVATION
OTC	OPERATING TEMPERATURE CONTROL
ST	STEAM TRACED
NI	NO INSULATION

LINE IDENTIFICATION

1A - O - 432 - 6" - J13A - NI

- 1A — TEXACO PLANT NUMBER
- O — TEXACO SERVICE SYMBOL
- 432 — SIZE NUMBER
- 6" — SIZE
- J13A — TEXACO PIPING MATERIAL SERVICE SPECIFICATION
- NI — INSULATION REQUIREMENTS

Stearns-Roger INCORPORATED

DRAWING STATUS

DRAWING	ISSUE No.	DATE
DESIGN (PRELIMINARY)	1	3/31/72
DESIGN (PRELIMINARY)	5	3/30/72
APPROVED & RELEASED FOR CONSTRUCTION	12	7/14/72

12A	7/13/72	REVISED PER ESTIMATE BASIS	TRH					
11	7/7/72	FOR LIST OF REVISIONS SEE DWG # 3-RA-1-1-3	JCD					
10A	6/26/72	FOR LIST OF REVISIONS, SEE DWG # 3-RA-1-1-3	D.L.					
9A	6/14/72	FOR LIST OF REVISIONS, SEE DWG # 3-RA-1-1-3	SR					
8A	6/9/72	FOR LIST OF REVISIONS, SEE DWG # 3-RA-1-1-3	TC					
7A	5-5-72	ISSUED FOR CONSTRUCTION REVISED PIPING SPECIFICATIONS, 5.11.72	SR					
6A	5/10/72	ISSUED FOR APPROVAL	J.L.L.					
No.	DATE	REVISIONS	BY	CHK'D	APP'D			

ISSUE | APPROVED BY S-RON

BECHTEL CORPORATION
SAN FRANCISCO

THE TEXAS COMPANY
PUGET SOUND WORKS

UTILITY PIPING & INSTRUMENT DIAGRAM
WATER SYSTEM
FCCU & GAS RECOVERY UNIT

BECHTEL	Job No. 2525	Drawing No. 3-RA-8	Rev. K

6400 D
APPROVED BY THE TEXAS CO. 7-19-72 5-25-72

12A	7/13/72	REVISED TIE-IN SHEET, DELETED TIE IN 48-S-12553, LINES 10-CW-101 AND 10-CW-102, ADDED TIE-IN 48-S-12553						
11	6-6-72	PIPING VALVES & INSTR. AS PER MK WI - 3RA1 REVISED LINES & TIE-INS	JA					
10A	6/26/72	REVISED PER DRAWING 3-RA-1 REV. 1	LH					
9A	6/14/72	REVISED PER DRAWING 3-AA-108 - REV. 0	TC					
8A	6/9/72	ISSUED FOR CONSTRUCTION	TC					
7A	5/10/72	REVISED TO JOB AWARD ISSUED FOR APPROVAL	TC					
No.	Date	Revisions	By	Chk'd				

SCALE 3/8" | DESIGNED | DRAWN

BECHTEL
HOUSTON

TEXACO INC.
PUGET SOUND PLANT

UTILITY PIPING & INSTRUMENT DIAGRAM
WATER SYSTEM
FCCU & GAS RECOVERY UNIT

BECHTEL	Job No. 10095	Drawing No. 3-RA-8	Rev. 12A
TEXACO	8910		

1 S-R Job No. C-1111O DWG No 22213 SHT. No 03-108 7-1-72

WA-TEX 000896

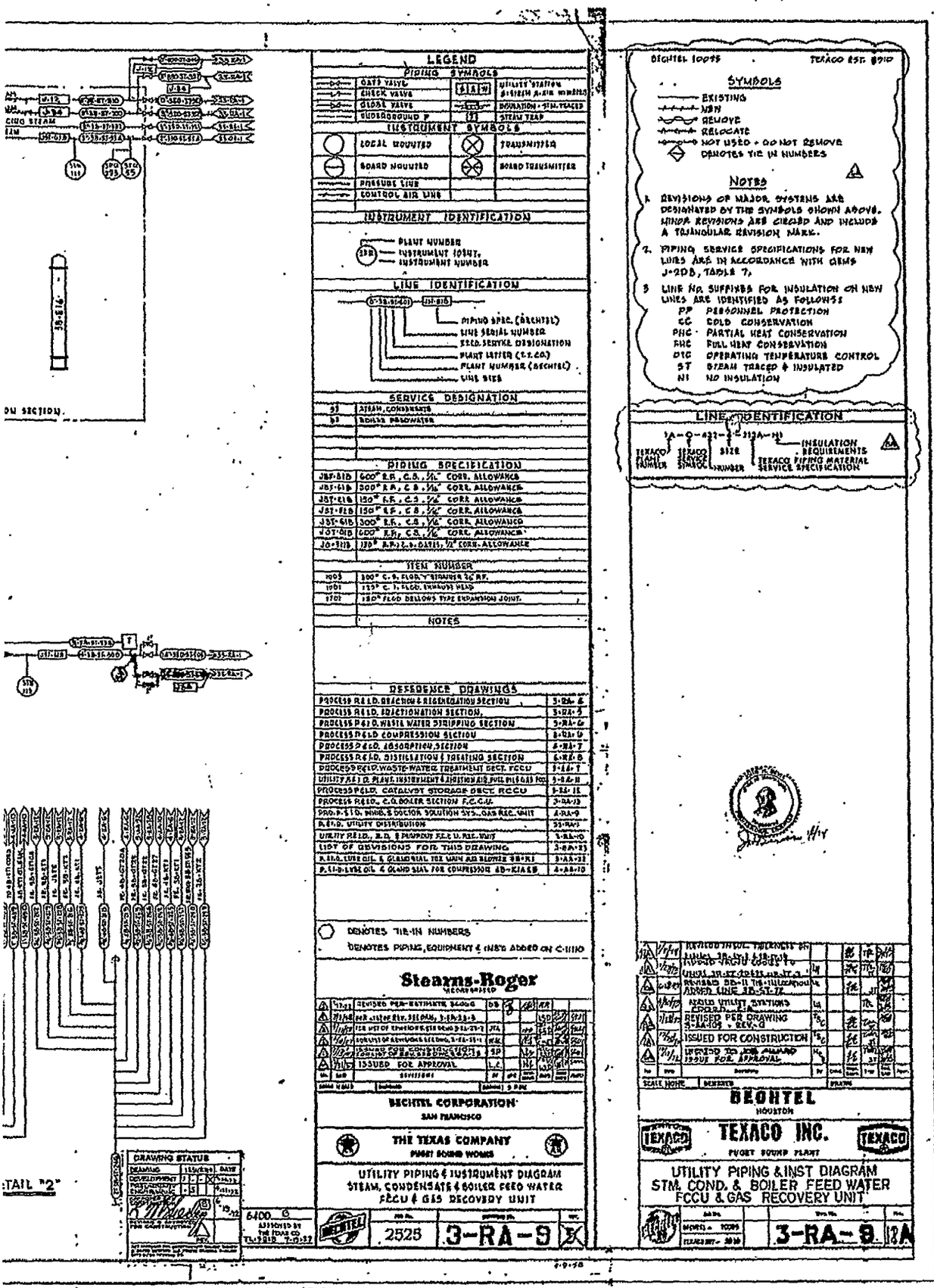

S-R JOB Nº C-1110 DWG Nº 2225B SHT Nº 03-1-09

WA-TEX 000897

LEGEND

PIPING SYMBOLS

—GV—	GATE VALVE		
—CV—	CHECK VALVE		
—SB—	SPECTACLE BLIND		
F.O.	FLUSHING OIL CONNECTION		

INSTRUMENT SYMBOLS

○	LOCAL MOUNTED	⊗	TRANSMITTER
⊖	BOARD MOUNTED		

INSTRUMENT IDENTIFICATION

PI 51 — PLANT NO. / INSTRUMENT IDENTIFICATION / INSTRUMENT NO.

LINE IDENTIFICATION

3"-SB-0-11B-J0-11B

- PIPING SPECIFICATION
- LINE SERIAL NO.
- T.T.CO. SERVICE DESIGNATION
- PLANT LETTER (T.T.CO.)
- PLANT NO. (BECHTEL)
- LINE SIZE

SERVICE DESIGNATION

O	HYDROCARBONS, LIQUID OR VAPOR, FUEL GAS
OV	OIL OR VAPOR-CATALYST PRESENT
ST	STEAM & CONDENSATE, FEED WATER
W	SERVICE WATER

PIPING SPECIFICATION

J0-11B	150# R.F. GATES C.S. 1/16" CORR. ALLOW.
J0-25B	150# R.F. GATES, C.S. 1/4" CORR. ALLOW.
J0-11B	150# R.F. GATES, C.S. 1/16" CORR. ALLOW.
J0T-611B	300# R.J. GATES, 1/8" CORR. ALLOWANCE
J0-99B	150# R.J. GATES, C.S. 1/16" CORR. ALLOW.

ITEM NUMBERS

G1B	300# FLGD. C.S. GATE VALVE, RING JOINT
B19-21	300# FLGD. C.S. BALL VALVE, RING JOINT, WITH FLUSHING OIL TAP
G1T	300# FLG. C.S. GATE VALVE W/ H.W. HAND WHEEL, 12 SEAL
1P03	300# FLG. "T" STRAINER, 3/16" S.P.
1101	150# FLG. DRESSER STYLE EXPANSION JOINT 3/16" S.P.

NOTES

○ DENOTES TIE-IN NUMBERS

* DENOTES PIPING, EQUIPMENT & INSTRUMENTS ADDED ON C-1111O

FROM WASTE WATER STRIPPERS AREA #2

REFERENCE DRAWINGS

PROCESS P & I.D. PROJECT SECT. FLUID CATALYTIC CRACKING UNIT	3-RA-A
PROCESS P & I.D. WASTE WATER STRIPPING SECT. FCCU	3-RA-G
UTILITY P & I.D. PLANT INST. & FLUE GAS, FCC UNIT	3-RA-11
PROCESS P & I.D. COMPRESSION SECT. GAS RECOVERY UNIT	4-RA-C
PROCESS P & I.D. ABSORPTION SECT. GAS RECOVERY UNIT	4-RA-7
PROCESS P & I.D. DIST. & TREATING SECT. GAS RECOVERY UNIT	4-RA-8
PROC. P & I.D. AMINE & DOCTOR SOLN. SYS. GAS. RECOVERY UNIT	4-RA-9
PROCESS FLOW DIAG. BLOWDOWN SYS.	19-RA-E
P & I.D. TANKAGE & INTERCONNECTING LINES SHEET NO. 9	51-RA-3

BECHTEL 10095 — TEXACO EST. 5910

SYMBOLS

EXISTING
NEW
REMOVE
RELOCATE
NOT USED

△4 DENOTES TIE-IN NUMBERS

NOTES

1. REVISIONS OF MAJOR SYSTEMS ARE DESIGNATED BY THE SYMBOLS SHOWN ABOVE. MINOR REVISIONS ARE CIRCLED AND INCLUDE A TRIANGULAR REVISION MARK.
2. PIPING SERVICE SPECIFICATIONS FOR NEW LINES ARE IN ACCORDANCE WITH GEMS J-205 TABLE 1.
3. LINE NUMBER SUFFIXES FOR INSULATION ARE △4 IDENTIFIED AS FOLLOWS:

PP	PERSONNEL PROTECTION
CC	COLD CONSERVATION
PHC	PARTIAL HEAT CONSERVATION
FHC	FULL HEAT CONSERVATION
OTC	OPERATING TEMPERATURE CONTROL
ST	STEAM TRACED
NI	NO INSULATION

△4

LINE IDENTIFICATION

1A-O-422-6"-J1DA-N1

- TEXACO PLANT NUMBER
- TEXACO SERVICE SYMBOL
- SIZE
- NUMBER
- INSULATION REQUIREMENTS
- TEXACO PIPING MATERIAL SERVICE SPECIFICATION

10/4/73

△4	10/4/73	RELOCATED TIE-IN 38-52						
△3	10/3/73	ADDED EQUIP. 09-F-3, 38-S-10, 4 LINE NO 38-O-12B-J0S-N/4"3910	JHH					
No.	Date	Revisions	By	Chkd	Proj Engr	Engr	Ck'd	Appr

SCALE — DESIGNED — DRAWN

BECHTEL
HOUSTON

TEXACO INC.
PUGET SOUND PLANT

UTILITY PIPING & INSTRUMENT DIAGRAM
BLOWDOWN, PUMPOUT, & EMERGENCY COOLING
FLUID CATALYTIC CRACKING UNIT

BECHTEL — 10095 | TEXACO EST — 5910 | 3-RA-10 | 7A

△4	12/21/72	REVISED PER REF. 36400, REF DWG 3-RA-10	RS					
△3	5/31/73	REVISED PER ESTIMATE 36400	PMM					
△2	7/17/73	TOE LIST OF REV. 3 PER DWG 3-RA-10-3	DFD					
△1	8/28/73	TOE LIST OF REV. 3 PER DWG 3-RA-10-3	GL					
△	10/4/73	REVISED PER ESTIMATE 36400 REF DWG 3-RA-10-0	GL					
△	8-10-73	ISSUED FOR APPROVAL	SP					
No.	Date	Revisions	By	Chkd	Proj Engr	Engr	Ck'd	Appr

DRAWN: NONE — DESIGNED — CHECKED: R. FOU

BECHTEL CORPORATION
SAN FRANCISCO

THE TEXAS COMPANY
PUGET SOUND WORKS

UTILITY PIPING & INSTRUMENT DIAGRAM
BLOWDOWN, PUMPOUT & EMERGENCY COOLING
FLUID CATALYTIC CRACKING UNIT

DRAWING STATUS

DRAWING	ISSUE NO.	DATE
DEVELOPMENT	1	7/5/73
PRELIMINARY	2	7/16/73
APPROVED FOR CONSTRUCTION	3	8/24/73
REVISED FOR CONSTRUCTION	4	9/3/73

Stearns-Roger Incorporated

6400 B
APPROVED BY DU SOUTH CO.
7-16-73 7-17-73

BECHTEL | 2525 | 3-RA-10 | X

S-R JOB No. C-1111O DWG. NO. 22218 SHT. NO. 03-1-10 6/25/73

WA-TEX 000898

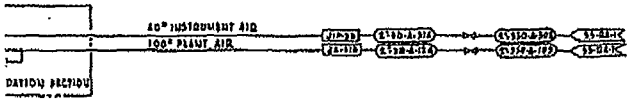

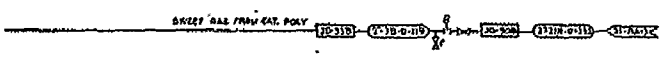

LEGEND

PIPING SYMBOLS

	GATE VALVE		SPECTACLE BLIND OPERATING
	SPECTACLE BLIND		INSULATION-STM. TRACED
	CHECK VALVE		PLUG VALVE
	SAFETY VALVE	WSIA	UTILITY STATION NUMBER, S-STM., A-AIR

INSTRUMENT SYMBOLS

	LOCAL MOUNTED		TRANSMITTER
	BOARD MOUNTED		COMBINATION SERVICE
	PNEU. LINE & MISC. CONN.		
	INSTR. ELECTRICAL LEAD		

INSTRUMENT IDENTIFICATION

PLANT NUMBER
INSTRUMENT IDENTIFICATION
INSTRUMENT NUMBER

LINE IDENTIFICATION

PIPING SPECIFICATION
LINE SERIAL NUMBER
TEXAS CO. SERVICE DESIGNATION
PLANT LETTER (T.T.CO.)
PLANT NUMBER (BECHTEL)
LINE SIZE

SERVICE DESIGNATION

A	PLANT AIR, INSTRUMENT AIR & AERATION AIR.
O	FUEL OIL & FUEL GAS

PIPING SPECIFICATION

JJ-31S	1250# MOM. RATING, 1/8" CORR. ALLOW.
JO-30S	150# R.R. 1/8" NOM. CORR. ALLOW.
JO-63S	150# R.R. COCKS, 1/8" CORR. ALLOW.
JO-61S	300# R.R. GATES, 1/8 CORR. ALLOW.
JJP-3S	125# NOM. RATING

ITEM NUMBERS

896	12"ø FLGD., F.F. HORIZONTAL SWING CHECK VALVE WITH HYDRAULIC DASH POT OR SIMILAR DAMPENING MECHANISM
617	300# FLGD. C.S. GATE VALVE, 11/16" B.P.
694	125# FLGD., I.R.B.B.T. GATE VALVE

⬡ DENOTES TIE-IN NUMBER
* DENOTES PIPING, EQUIPMENT & INSTRUMENTS ADDED ON E-11110.

REFERENCE DRAWINGS

PROCESS P.&I.D., REACTOR & REGENERATION SECT., F.C.C.U.	3-RA-1
UTILITY P.&I.D., WATER SYSTEM F.C.C.U.	3-RA-5
UTILITY P.&I.D., STM. COND. & BOILER FEED WATER F.C.C.U.	3-RA-9
UTILITY P.&I.D., BLOWDOWN & PUMPOUT F.C.C.U.	3-RA-10
PROCESS P.&I.D., CAT. STORAGE SECT. F.C.C.U. GAS REC. UNIT	3-RA-11
PROCESS P.&I.D., C.O. BOILER SECTION, F.C.C.U.	3-RA-13
PROCESS P.&I.D., WATER WATER TREATMENT SECT. FCCU	3-AA-7
LIST OF REVISIONS TO THIS DRAWING	3-RA-31
PROCESS P.&I.D., DISTILLATION & TREATING SECT. GAS REC. UNIT	4-RA-5
P.&I.D. TANKAGE & INTERCONNECTING LINES	31-RA-5
UTILITY DISTRIBUTION	35-RA-1

6	8/8/72	REVISED PER REVISIONS 3640C	TAU				
5	7/31/70	FOR LIST OF REVISIONS SEE DWG 3-RA-1-3	WJD				
4	6/4/70	FOR LIST OF REVISIONS SEE DWG 3-RA-1-3	G.L.				
3	4/1/70	FOR LIST OF REVISIONS, SEE DWG. 3-RA-11-3	WJD				
2	2/11/70	For List of Revisions See Dwg. No. 3-RA-11-3	GL				
1	1/16/70	For List of Revisions See Dwg. No. 3-RA-11-3	GL				
0	5/15/67	ISSUED FOR APPROVAL	GP				

Stearns-Roger

DRAWING STATUS

DRAWING	ISSUE NO.	DATE
APPROVED FOR CONSTRUCTION	5	8/8/72
APPROVED FOR CONSTRUCTION	6	8/8/72
APPROVED FOR CONSTRUCTION	7	8/8/72

APPROVED AT THE TEXAS CO. Tacoma 7-24-67

BECHTEL CORPORATION
SAN FRANCISCO

THE TEXAS COMPANY
PUGET SOUND WORKS

UTILITY PIPING & INSTRUMENT DIAGRAM
PLANT, INSTRUMENT & AERATION AIR, FUEL OIL & GAS
FCCU & GAS RECOVERY UNIT

BECHTEL 2525 3-RA-11 X

BECHTEL - 10095 TEXACO EST. 5910

SYMBOLS

EXISTING
NEW
REMOVE
RELOCATE
NOT USED- DO NOT REMOVE
DENOTES TIE-IN NUMBERS

NOTES

1. REVISION OF MAJOR SYSTEMS ARE DESIGNATED BY THE SYMBOLS SHOWN ABOVE, MINOR REVISIONS ARE CIRCLED AND INCLUDE A TRIANGULAR REVISION MARK.
2. PIPING SERVICE SPECIFICATIONS FOR NEW LINES ARE IN ACCORDANCE WITH CEMS J-208, TABLE 7.
3. LINE NUMBER SUFFIXES FOR INSULATION ARE IDENTIFIED AS FOLLOWS:
   - PP PERSONNEL PROTECTION
   - CC COLD CONSERVATION
   - PHC PARTIAL HEAT CONSERVATION
   - FHC FULL HEAT CONSERVATION
   - OTC OPERATING TEMPERATURE CONTROL
   - ST STEAM TRACED
   - NI NO INSULATION

LINE IDENTIFICATION

1A - O - 632 - A - 12A - NI

TEXACO PLANT NUMBER | TEXACO SERVICE SYMBOL | SIZE | NUMBER | TEXACO PIPING MATERIAL SERVICE SPECIFICATION | INSULATION REQUIREMENTS

WA-TEX 000899

3	9/6/73	REVISED SPEC. NO. LINES 3A-O-632-A-12A					
2	6-8-73	ADDED BLOCK VALVE SPECIFICATION NO. 3A-O-632-A-12A, CHANGE CONNECTIONS					
1	2/6/73	REVISED PER DRAWING 3AA-11, REV. 0					
0	7/11/72	ISSUED FOR CONSTRUCTION					
	7/11/72	ISSUE FOR APPROVAL					

BECHTEL
HOUSTON

TEXACO INC.
PUGET SOUND PLANT

UTILITY PIPING & INST DIAGRAM
PLT. INST & AERATION AIR, FUEL OIL & GAS
FCCU & GAS RECOVERY UNIT

BECHTEL - 10095 | TEXACO EST. 5910 | 3-RA-11 | 11A

S-R JOB No. E-11110 DWG. No. 22219 SHT. No. 03-1-11. 6/15/70

EQUIPMENT LIST PLANT 3

38-C1	REACTIONATOR
38-C2	OVERHEAD ACCUMULATOR
38-C3	AIR SURGE DRUM
38-C4	PRODUCT STRIPPER
38-C5	CONDENSATE FLASH DRUM
38-C6	HOT CATALYST STORAGE HOPPER
38-C7	FRESH CATALYST STORAGE HOPPER
38-C8	WASTE WATER SURGE DRUM
38-C9	WASTE WATER STRIPPER
38-C10	AIR WATER CONTACT TOWER
38-C11	AIR WATER SEPARATOR
38-C12	CATALYST FINES HOPPER
38-C14	REACTOR
38-C15	REGENERATOR
38-C16	FUEL GAS KNOCKOUT DRUM
38-C17	INT. BOILER BLOWDOWN DRUM
38-C18	CONT. BOILER BLOWDOWN DRUM
38-C19	BLOWDOWN DRUM
38-C20	SEAL TANK
38-C21	6V PASS SEAL TANK
(SEE BELOW FOR "D" NO. CONT'N)	
38-D1	CONDENSATE STORAGE
38-D2	PHOSPHATE MIXING
38-D3	COMPRESSOR LUBE OIL MAKEUP
38-E1 A-K	FRACT. OVERHEAD CONDENSERS
38-E2	INTERMEDIATE REFLUX STM. GEN'R.
38-E3	SLURRY QUENCH STM. GEN'R.
38-E4	FRESH FEED L.O.O. EXCHANGER
38-E5 A&B	FRESH FEED PREHEATER
38-E6 A&B	LIGHT GAS OIL COOLER
38-E7	INTERMEDIATE GAS OIL COOLER
38-E8	I.M.O. - B.F.W. EXCHANGER
38-E9	FRACTIONATOR BOTTOMS COOLER
38-E10	SURFACE CONDENSER (AIR BLOWER TURBINE)
38-E11	FRACT. STM'G. - B.F.W. EXCHANGER
38-E12	WASTEWATER FEED STM'G. EXCHANGER
38-E13	W.W. STRIPPER REFLUX COOLER
38-E14 A&B	WASTEWATER COOLER
38-E15	EMERGENCY COOLING COIL
38-E16 (16A)	LUBE OIL COOLERS (38-K14 & 38-K14A)
38-E18 A&B	LUBE OIL COOLERS (38-K1)
38-E19 A&B	LUBE OIL COOLERS (38-K2)
38-F1	AIR HEATER
38-F2	CO BOILER
38-G50	FRESH FEED
38-G50A	COMMON SPARE (38-G50 & 38-GG)
38-G2 & 2A	REACT. OVHD. REFLUX & SPARE
38-G3 & 3A	SLURRY QUENCH & SPARE
38-G4 & 4A	INTERMEDIATE REFLUX & SPARE
38-G5	LIGHT GAS OIL
38-G5A	COMMON SPARE (38-G5 & 38-G7)
38-G6	RECYCLE GAS OIL
38-G7	INTERMEDIATE GAS OIL PRODUCT
38-G8 & 8A	FRACT. BOTTOMS PROD. & SPARE
38-G9 & 9A	SOUR WATER & SPARE
38-G10 & 10A	MAIN AIR BLOWER TURB. COND. & SPARE
38-G11	WASTE WATER STRIPPER FEED
38-G11A	COMMON SPARE (38-G11 & 38-G13)
38-G13 & 13A	WASTE WATER STRIPPER BOTTOMS & SPARE
38-G14	WASTE WATER STRIPPER REFLUX
38-G14 & 15A	REG. EXCHANGER & AIR WATER & SPARE
38-G16	SLOP OIL
38-G17	FCCU (BLOWDOWN) PUMPOUT
38-G18	PHOSPHATE INJECTION
38-G19	PHOSPHATE INJECTION
38-G20	PHOSPHATE INJECTION
38-G21 & 21A	LUBE OIL (38-K14 & 38-K14A)
38-G22 & 22A	LUBE OIL & SPARE (38-K1)
38-G23 & 23A	LUBE OIL & SPARE (38-K2)
38-G24	CO BOILER WASH WATER
38-G25	CONDENSATE RETURN
38-G29	SOUR GAS K.O. DRUM PUMPOUT
38-H1	AIR EJECTORS & CONDENSERS
38-K1	MAIN AIR BLOWER
38-K2	LIFT AIR BLOWER
38-K3 & 4A	FORCED DRAFT FAN & SPARE
38-T1	ELEVATOR (F.E.C. STRUCTURE)
38-C22	JOHNSON ELECTRAP
38-C23	FCCU HOT CHARGE DRUM
38-C24	48-K1A K.O. POT
38-C25	SOUR GAS K.O. DRUM

EQUIPMENT LIST PLANT 4

48-C1	ABSORBER DEETHANIZER
48-C2	SPONGE COLUMN
48-C3	DEBUTANIZER COLUMN
48-C4	SPLITTER COLUMN
48-C5	STEAM CONDENSATE DRUM
48-C6	INTERSTAGE SEPARATOR
48-C7	2ND STAGE SEPARATOR
48-C8	WATER DRAW OFF POT
48-C9	DEBUTANIZER OVERHEAD ACCUMULATOR
48-C10	SPLITTER OVERHEAD ACCUMULATOR
48-C11	HEAVY FCC GASO CAUSTIC TREATER
48-C12	LIGHT FCC GASO CAUSTIC TREATER
48-C13	GUM INHIBITOR DRUM
48-C14	CORROSION INHIBITOR DRUM
48-C15	JOHNSON ELECTRAP
48-C16	48-K1B K.O. POT
48-D1	DOCTOR SOLUTION MIXING TANK
48-E1	GAS COMPRESSOR INTERCOOLER
48-E2	GAS COMPRESSOR AFTERCOOLER
48-E3 A&B	ABSORPTION OIL COOLER
48-E4	ABS. DE-ETHANIZER 1ST INTERCOOLER
48-E7	LIGHT FCC GASOLINE PRECOOLER
48-E8	ABS DE-ETHANIZER OIL REBOILER
48-E9	ABS DE-ETHANIZER STEAM REBOILER
48-E10A&B	DEBUTANIZER OVERHEAD CONDENSER
48-E11	DEBUTANIZER REBOILER
48-E12	GASO SPLITTER OH CONDENSER (LIGHT)
48-E13	GASO SPLITTER REBOILERS
48-E14	HEAVY FCC GASO COOLER
48-E15	LIGHT FCC GASO COOLER
48-E16	SURFACE COND. GAS COMP TURB
48-E17	INHIBITOR DRUM HEATER
48-E18	HEAVY FCC GASOLINE AFTER COOLER
48-E19 A&B	LUBE OIL COOLERS (48-K1 A&B)
48-E50	SPLITTER FEED-BOTTOMS EXCHANGER
48-E51	SPLITTER REBOILER
48-G2 & 2A	ABSORPTION OIL CHARGE PUMP & SPARE
48-G4 & 4A	INTERSTAGE SEPARATOR LIQUID & SPARE
48-G5 & 5A	2ND STAGE SEPARATOR LIQUID & SPARE
48-G6 & 6A	LEAN SPONGE OIL & SPARE
48-G7	ABS. DEETH. 1ST INTERCOOLER CIRC.
48-G7A	COMMON SPARE FOR G7 & G8
48-G8	ABS. DEETH. 2ND INTERCOOLD CIRC.
48-G9&9A	ABS. DEETH. REBOILED & SPARE
48-G10	RECIRCULATED LEAN OIL
48-G11	DEBUTANIZER PROD
48-G11A	COMMON SPARE FOR G10 & G11
48-G12	SPLITTER BOTTOMS
48-G50A	COMMON SPARE FOR G12 & G-50
48-G50	SPLITTER REFLUX & PRODUCT
48-G14	NO 1 CAUSTIC CIRCULATING
48-G15	NO 2 CAUSTIC CIRCULATING
48-G18	INHIBITOR BLEND INJECTION (PROPORT)
48-G19	INHIBITOR CIRCULATING
48-G20&20A	COMPRESSOR TURB. COND. & SPARE
48-G21&21A	DEBUTANIZER REFLUX & SPARE
48-G22	CORROSION INHIBITOR INJECTION
48-G23	CORROSION INHIBITOR INJECTION
48-G24	DOCTOR SOLUTION INJECTION
48-G25	NO 3 CAUSTIC CIRCULATING
48-G26	NO 4 CAUSTIC CIRCULATING
48-G27(27A	LUBE OIL (48-K1A&B)
48-G16	WATER INJECTION (TO 48-K2)
48-H1	AIR EJECTORS & CONDENSERS
48-K1A	1ST. STAGE GAS COMPRESSOR
48-K1B	2ND. STAGE GAS COMPRESSOR
48-HZ	FREON REFRIGERATION SYSTEM
48-KE2A	ABSORBTION OIL CHILLER
48-KE2B	BUTANE REFRIGERANT CONDENSER

NOTE: ALL HORIZONTAL VESSELS ARE LOCATED TO SEAM-LINE AT ℄ OF VESSEL

SCALE IN FEET

ADDED LOCATING DIMENSIONS FOR 38-G16, 38-G17, 38-E8A, W.O.#7 AT 38-G11, STARTER BASE, 48-G6, 6A, 48-E4, 4A, 48-E4A, 48-E8, 48-E13, 48-E14, 48-E15, 48-E16, 48-E17, 48-E18, 48-E19A, 48-E19B, 48-E50, 48-E51, 48-G2, 2A, 48-G4, 4A, 48-G5, 5A, 48-G7, 7A, 48-G8, 8A, 48-G9, 9A, 48-G10, 48-G11, 48-G11A, 48-G12, 48-G50, 48-G50A, 48-G14, 48-G15, 48-G18, 48-G19, 48-G20, 20A, 48-G21, 21A, 48-G22, 48-G23, 48-G24, 48-G25, 48-G26, 48-G27, 27A, 48-G16, 48-H1, 48-K1A, 48-K1B, 48-HZ, 48-KE2A, 48-KE2B, RELOCATED 38-G6, 6A, 38-G7, 7A, 38-G8, 8A, 38-G11, 38-G12, 38-G12A, 38-G50, 38-G50A, 38-G14, 38-G15, 38-G18, 38-G19, 38-G20, 38-G21, 38-G22, 38-G23, 38-G24, 38-G25, 38-G26, 38-G27, 38-G16, 38-H1, 38-K1, 38-K2, 38-K3, 38-K4A, 38-T1, 38-C22, 38-C23, 38-C24, 38-C25, 38-E8, 38-E8A, 38-E13, 38-E14, 38-E15, 38-E16, 38-E17, 38-E18, 38-E19A, 38-E19B, 38-E50, 38-E51, 38-G2, 38-G2A, 38-G4, 38-G4A, 38-G5, 38-G5A, 38-G7, 38-G8, 38-G8A, 38-G9, 38-G9A, 38-G10, 38-G11, 38-G11A, 38-G12, 38-G13, 38-G13A, 38-G14, 38-G15, 38-G16, 38-G17, 38-G18, 38-G19, 38-G20, 38-G21, 38-G22, 38-G23, 38-G24, 38-G25, 38-G26, 38-G27

NOTES.

1. THIS FC (NEW) CONTROLS TOTAL FLOW BY RESETTING INDIVIDUAL HEATER COIL FLOW CONTROLLERS (NEW)
2. NORMAL OPERATION WITH 250 B/H ICGO RECYCLE AND NO HCGO RECYCLE. ALTERNATE CASE WITH 250 B/H HCGO RECYCLE AND NO ICGO RECYCLE.
3. PUSHBUTTON OR LOW PRESSURE DROP SIGNAL ACROSS THE SPENT OR REGENERATED CATALYST. SLIDE VALVE AUTOMATICALLY OPENS VALVES IN LINES TO EMERGENCY COOLER AND CLOSES INLET VALVE TO RISER. THE EXISTING VALVE AT THE RISER WILL BE RELOCATED AS THE EMERGENCY COOLER VALVE AND A NEW VALVE WILL BE INSTALLED AT THE RISER.
4. NORMAL OPERATION– HOT FEED FROM CRUDE AND DEASPHALTING UNITS. ALTERNATE OPERATION– COLD FEED FROM STORAGE.
5. STREAM 7 PROPERTIES ARE FROM TEXACO TEST RUN.
6. STREAM 8 PROPERTIES ARE FROM TEXACO'S NEW DESIGN.

SERVICE WATER

TO STORAGE

OR PdCL 14A & B

TO FEED RISER

TO LIGHT GAS OIL PRODUCT COOLERS

TO FRACTIONATOR

HCGO TO GAS RECOVERY UNIT REBOILERS

SYMBOLS

- EXISTING
- NEW
- REMOVE
- RELOCATE
- NOT USED DO NOT REMOVE
- REPLACE

NOTICE

THIS DRAWING AND THE INFORMATION HEREIN CONTAINED ARE THE PROPERTY OF TEXACO INC. WHICH HAS FURNISHED THEM IN CONFIDENCE UPON THE UNDERSTANDING AND CONDITION THAT ALL PERSONS, FIRMS OR CORPORATIONS RECEIVING SUCH DRAWING AND INFORMATION SHALL BY THE ACT OF RECEIVING THEM BE BOUND TO HAVE AGREED TO HAVE NO COPY, DUPLICATION, DISCLOSURE OR USE WHATSOEVER OF ALL OR ANY PART THEREOF EXCEPT AS EXPRESSLY AUTHORIZED IN WRITING BY TEXACO INC., NOT TO GIVE LEND OR OTHERWISE DISPOSE OF THIS DRAWING, AND TO RETURN THIS DRAWING PROMPTLY UPON REQUEST.

TEXACO INC.
ENGINEERING DEPARTMENT
HOUSTON, TEXAS

PROCESS FLOW DIAGRAM
FCC UNIT
REACTOR FEED HEAT AND EMERGENCY COOLING

BY	DATE	ESTIMATE	B. M.	BY	DATE	DESCRIPTION	SYMBOL
[illegible]	08 Mar 74			[illegible]	2/28/72	ISSUED FOR ESTIMATE 5410 FSP CRUDE EXPANSION-610	0
APPROVED		JOB		REVISIONS			

INITIALS: RvC

SCALE:

NUMBER ASSIGNED AND TRACING RECORD ENTERED — DATE

3-RA-40

WA-TEX 000901

PIPING SYMBOLS

- GATE VALVE (SEE NOTE 2)
- GLOBE VALVE
- CHECK VALVE
- BUTTERFLY VALVE
- ANGLE VALVE
- PRESSURE SAFETY VALVE
- BALL VALVE
- PRIMARY PROCESS LINE
- SECONDARY PROCESS OR UTILITY LINE
- PNEUMATIC INSTRUMENT LINE
- ELECTRIC INSTRUMENT LINE
- "Y" TYPE STRAINER
- CONE TYPE STRAINER
- HOSE CONNECTION
- SHUTDOWN SLIP OR MAINTENANCE BLIND
- OPERATIONAL OR SPECTACLE BLIND
- OPEN DRAIN HUB

FOR COMPLETE LIST OF INSTRUMENT SYMBOLS, REFER TO TEXACO STANDARD DRAWINGS IS-1789, IS-1790 AND IS-1791

Notes

20. 3B-P-218
3B-P-237
3B-ST-1
3B-ST-2
3B-ST-12
3B-ST-56
3B-ST-64
3B-MISC-114

UTILITY LEGEND

AP	PLANT AIR
AS	STARTING AIR
DOW	SEWER - OILY WATER
Gf	GAS REFINERY FUEL
Ig	INSTRUMENT AIR SUPPLY
Of	OIL FUEL
Rf	TO FLARE DRUM
S250	250# STEAM
S40	40# STEAM
Sc250	250" STEAM CONDENSATE
Wy	WATER - SERVICE

NOTES

1. LOCATE TOGETHER.
2. FOR HEATER DECOKING SEE DETAIL "A"
3. PUSH BUTTON OR LOW PRESSURE DROP SIGNAL ACCROSS THE SPENT CATALYST OR REGENERATOR CATALYST SLIDE VALVE WILL AUTOMATICALLY OPEN VALVE TO EMERGENCY COOLER, CLOSE INLET VALVE TO RISER SHOWN ON DWG. 3-RA-4, OPEN EMERGENCY COOLER WATER SHUTOFF VALVE, CLOSE THE SLURRY RECYCLE CONTROL VALVE AND CLOSE RECYCLE GAS OIL TO 3B-F3 AT 3FRC-11.
4. RELOCATE EXISTING FCC RISER INLET VALVE 3Pd CL 14VB AS CLOSE TO TEE AS POSSIBLE. PIPE FROM TEE TO VALVE TO BE 9 CR
5. CAN USE EXISTING TURBINE 3B-GT1A
6. ADJUSTABLE ORIFICE IN PNEUMATIC LINE TO EFFECT SLOW OPENING AND CLOSING OF VALVE 3Pd CL 14V-M.
7. ANGLE OF INTERSECTION SHOULD BE 45° OR LESS
8. REPLACE EXISTING FCC INLET PIPING WITH 9CR PIPE
9.
10. LINE NUMBER SUFFIXES FOR INSULATION ARE IDENTIFIED AS FOLLOWS:
    - PP - PERSONNEL PROTECTION
    - CC - COLD CONSERVATION
    - PHC - PARTIAL HEAT CONSERVATION
    - FHC - FULL HEAT CONSERVATION
    - OTC - OPERATING TEMPERATURE CONTROL
    - ST - STEAM TRACED & INSULATED
    - NI - NO INSULATION
11. UNLESS OTHERWISE SPECIFIED, THE VALVE SELECTION SHALL BE BY THE CONTRACTOR GEMS.
12. REFER TO GEMS J-10, PARA. 513 FOR TEXACO'S PHILOSOPHY WITH REGARDS TO BLINDS TO BE SUPPLIED BY THE CONTRACTOR. PARTICULAR ATTENTION SHOULD BE GIVEN TO THE MODIFICATION OF PARA. 513.1 WHICH COVERS SHUTDOWN BLINDS.
13. RELIEF VALVES 3-PSV-74&75 REQUIRE "P" SIZE ORIFICE
14. TRANSFER LINE PRESSURE DROP MUST BE CHECKED BY CONTRACTOR AFTER HEATER SELECTION HAS BEEN MADE

NOTICE

THIS DRAWING AND THE INFORMATION HEREIN CONTAINED ARE THE PROPERTY OF TEXACO AND WHICH HAS FURNISHED THEM IN CONFIDENCE UPON THE UNDERSTANDING AND CONDITION THAT ALL PERSONS THEREOF OR ORGANIZATIONS RECEIVING SUCH DRAWING AND INFORMATION SHALL BE THEY OR ORGANIZATIONS THEM OR THEIRS AGREED TO HOLD SAME IN CONFIDENCE, DISCLOSURE OR USE WHATSOEVER OF ALL OR ANY PART THEREOF EXCEPT AS SPECIFICALLY AUTHORIZED IN WRITING BY TEXACO INC., NOT TO GIVE, LEND OR OTHERWISE DISPOSE OF THIS DRAWING, AND TO RETURN THIS DRAWING PROMPTLY UPON REQUEST.

BECHTEL - 10095 TEXACO EST. - 3910

SYMBOLS

- EXISTING
- NEW
- REMOVE
- RELOCATE
- NOT USED (DO NOT REMOVE)
- DENOTES TIE-IN NUMBERS

NOTES

15. REVISIONS OF MAJOR SYSTEMS ARE DESIGNATED BY THE SYMBOLS SHOWN ABOVE. MINOR REVISIONS ARE CIRCLED AND INCLUDE A TRIANGULAR REVISION MARK.
16. PIPING SERVICE SPECIFICATIONS FOR NEW LINES ARE IN ACCORDANCE WITH GEMS J-208 TABLE 7.
17. LINE NUMBER SUFFIXES FOR INSULATION ARE IDENTIFIED AS FOLLOWS:
    - PP PERSONNEL PROTECTION
    - CC COLD CONSERVATION
    - PHC PARTIAL HEAT CONSERVATION
    - FHC FULL HEAT CONSERVATION
    - OTC OPERATING TEMPERATURE CONTROL
    - ST STEAM TRACED
    - NI NO INSULATION

LINE IDENTIFICATION

1A - Q - 432 - 4" - J13A - NI

- 1A — TEXACO PLANT NUMBER
- Q — TEXACO SERVICE SYMBOL
- 432 — SIZE NUMBER
- 4" — SIZE
- J13A — TEXACO PIPING MATERIAL SERVICE SPECIFICATION
- NI — INSULATION REQUIREMENTS

11A	10/8/73	REVISED INSUL. THICKNESS ON LINES PER NOTE 20				TA	
10A	11-28-73	ADDED "ST" TO LINES 3B-P-250 THRU 254; REVISED SPEC				TA	
9A	11/14/73	ADDED INSTR. NO. 3HIC-145 PER LETTER W/BH-701-10131173				TA	
8A	11/8/73	CHANGED 3PSOV-14V-K TO BOARD MOUNTED				TA	
7A	11/1/73	ADDED 3HIC-14V3 PER W/BH-253, 6-26-73				TA	
6A	11/ /73	REVISED PER DWG 3-AA-141 REV. 3A				TA	
5A	6/6/73	REVISED PER DWG 3-AA-141 REV. 2A				TA	
4A	5/21/73	REVISED PER DWG 3-AA-141 REV. 1	HH			TA	
3A	2-23-73	REVISED PER DRAWING 3-AA-141 - REV. 0	TSC				
2A	12/14/72	ISSUED FOR CONSTRUCTION	TSC			TA	
1A	11/1/72	UPDATED TO JOB AWARD ISSUED FOR APPROVAL	TSC				
		ADDED 1A-Q-432-4"-J13A-NI TO THE IN-HOT CHANGE DWG 3B-425 PER CLIENT LETTER W/BH-10-6-72	HH			TA	

No.	Date	Revisions	By	Chkd.	Design Supvr.	Engr.	Proj. Engr.	Approv.

SCALE NONE | DESIGNED | DRAWN

BECHTEL
HOUSTON

TEXACO INC.
PUGET SOUND PLANT

PROCESS PIPING & INST. DIAGRAM
FEED PREHEAT
FLUID CATALYTIC CRACKING UNIT

BECHTEL - 10095
TEXACO EST. - 3910
3-RA-41 11A

A.W.K.	3/1/72	ISSUED FOR ESTIMATE SHUTOFF VALVE EXPANSION - RIP	0
NO.	BY	DATE	DESCRIPTION	SYMBOL

REVISIONS

TEXACO INC.
ENGINEERING DEPARTMENT
HOUSTON, TEXAS

ENGINEERING FLOW DIAGRAM
FEED PREHEAT
FLUID CATALYTIC CRACKING UNIT

INITIALS	DATE STARTED	DATE FINISHED	SCALE: NONE
DRAWN BY	HJH		
CHECKED BY			NUMBER ASSIGNED AND TRACING RECORD ENTERED — DATE
APPROVED BY			
TRACING CHKD			
TRACING BY			3-RA-41

WA-TEX 000902

N

EQUIPMENT LIST

3B-E40	EMERGENCY COOLER
3B-F3	REACTOR CHARGE HEATER
3B-C40	QUENCH DRUM



WA-TEX 000903

No.	Date	Revisions	By	Chkd.	Engr. Engr.	Eng.	Prof. Engr.	Appr.
6	7/24/73	LOCATED ANALYZER BLDG.	FVH	CLB	[illegible]	[illegible]	[illegible]	
4	7-20-73	ADDED PIPE SUPPORT COL'S. P3-B,C,T4A	FVH	CLB	[illegible]		[illegible]	
3	6-11-73	LOCATED ANALYZER HOUSE, QUENCH DRUM & PIPERACK COLUMNS & SLEEPERS	J.F.	FVH	[illegible]	[illegible]	[illegible]	
2	11/22/72	ISSUED FOR CONSTRUCTION PER TEXACO LETTER NO WBH-66	[illegible]	[illegible]		[illegible]	[illegible]	
1		UPDATED TO JOB AWARD ISSUED FOR APPROVAL	TB	[illegible]				

SCALE | DESIGNED | DRAWN

BECHTEL
HOUSTON

TEXACO INC.
PUGET SOUND PLANT

PLOT PLAN
FCCU HEATER & EMERGENCY COOLER

Job No.		Dwg. No.	Rev.
BECHTEL - 10006		3-RA-42	5A
TEXACO EST - 3910			

NOTICE
THIS DRAWING AND THE INFORMATION HEREIN CONTAINED ARE THE PROPERTY OF TEXACO INC. WHICH HAS FURNISHED THEM IN CONFIDENCE UPON THE UNDERSTANDING AND CONDITION THAT ALL PERSONS, FIRMS OR CORPORATIONS RECEIVING SUCH DRAWING AND INFORMATION SHALL BY THE ACT OF RECEIVING THEM BE DEEMED TO HAVE AGREED TO MAKE NO COPY, SUPPLICATION, DISCLOSURE OR USE WHATSOEVER OF ALL OR ANY PART THEREOF EXCEPT AS EXPRESSLY AUTHORIZED IN WRITING BY TEXACO INC., NOT TO GIVE, LEND OR OTHERWISE DISPOSE OF THIS DRAWING, AND TO RETURN THIS DRAWING PROMPTLY UPON REQUEST.

TEXACO INC.
ENGINEERING DEPARTMENT
HOUSTON, TEXAS

PLOT PLAN
FCCU HEATER & EMERGENCY COOLER

INITIALS	DATES	
	STARTED	FINISHED
DRAWN BY:		
TRACED BY:		
CHECKED BY:		
TRACING MADE FROM DRAWING NO.		

SCALE:
NUMBER ASSIGNED AND TRACING RECORD ENTERED — DATE 2-17-72

3-AA-42

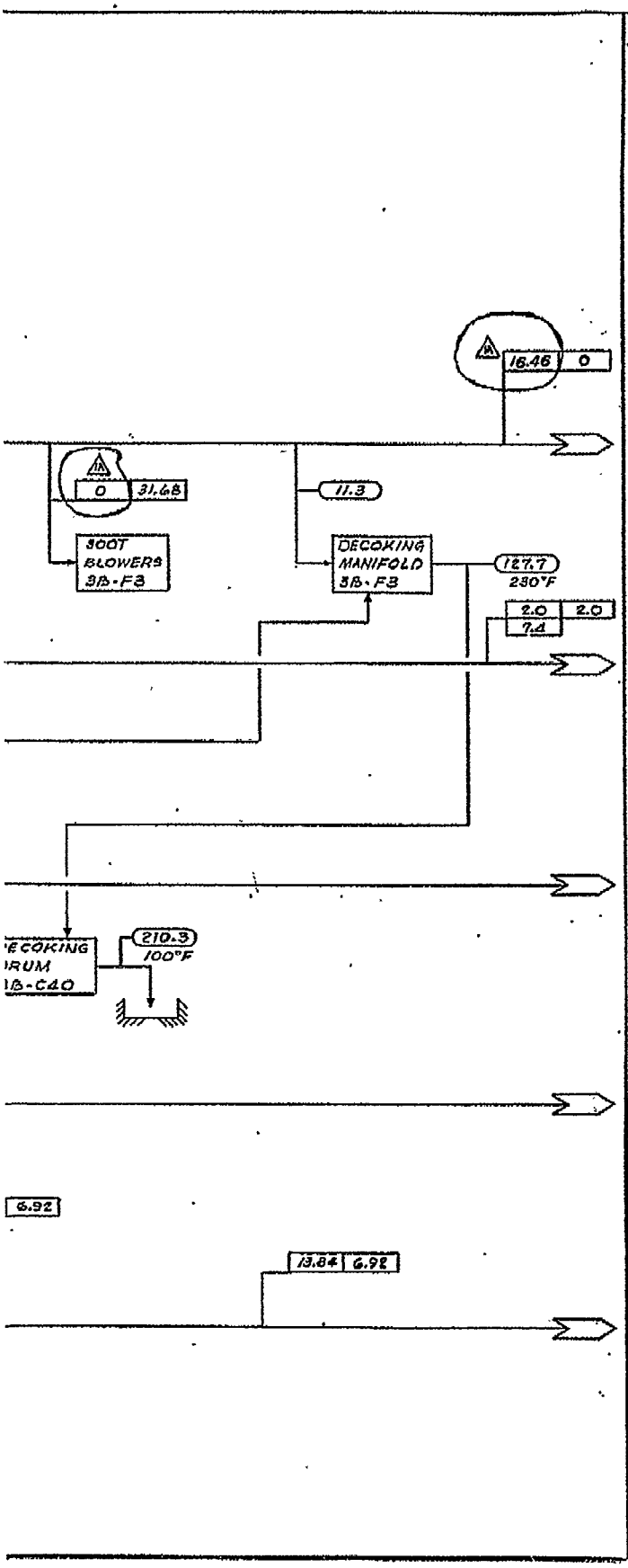

LEGEND

1	2
3	

1 - NORMAL OPERATION FIRING HEATER ON FUEL GAS.

2 - NORMAL OPERATION FIRING HEATER ON FUEL OIL.

3 - SPARE FRESH FEED PUMP OPERATING.

TEMP °F — DESIGN - DECOKING OPERATION

ALL FIGURES IN 1000 #/HR. EXCEPT AS NOTED

No.	Date	Revisions	By	Chkd.	Dept. Supvr.	Eng.	Proj. Engr.	Appr.
1A	8/4/73	ISSUED FOR INFORMATION	MHB		JL	TCL	JS	
2A	8/7/73	ISSUED FOR DESIGN	[illegible]		JE	TCL	[illegible]	

SCALE | DESIGNED | DRAWN

BECHTEL
HOUSTON

TEXACO INC.
PUGET SOUND PLANT

UTILITY USAGE DIAGRAM
FCCU UNIT PLANT 3B

BECHTEL - 10005
TEXACO EST - 3910

3-RA-43 | 1A

WA-TEX 000904

ER

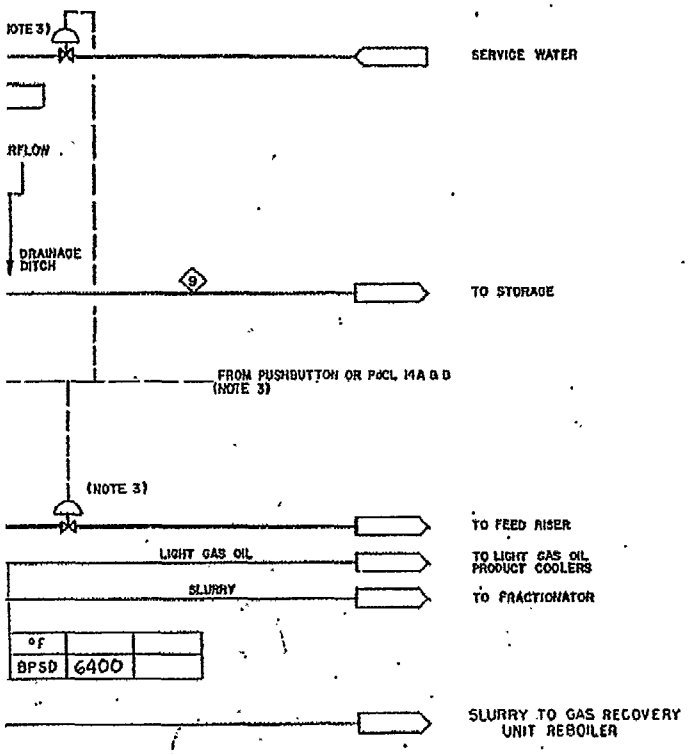

NOTES.

1. THIS FC(NEW) CONTROLS TOTAL FLOW BY RESETTING INDIVIDUAL HEATER COIL FLOW CONTROLLERS (NEW)
2. NORMAL OPERATION WITH 250 B/H ICGO RECYCLE AND NO HCGO RECYCLE. ALTERNATE CASE WITH 250 B/H HCGO RECYCLE AND NO ICGO RECYCLE.
3. PUSHBUTTON OR LOW PRESSURE DROP SIGNAL ACROSS THE SPENT OR REGENERATED CATALYST SLIDE VALVE AUTOMATICALLY OPENS VALVES IN LINES TO EMERGENCY COOLER AND CLOSES INLET VALVE TO RISER. THE EXISTING VALVE AT THE RISER WILL BE RELOCATED AS THE EMERGENCY COOLER VALVE AND A NEW VALVE WILL BE INSTALLED AT THE RISER.
4. NORMAL OPERATION—HOT FEED FROM CRUDE AND DEASPHALTING UNITS. ALTERNATE OPERATION— COLD FEED FROM STORAGE.
5. STREAM 7 PROPERTIES ARE FROM TEXACO TEST RUN.
6. STREAM 8 PROPERTIES ARE FROM TEXACO'S NEW DESIGN.
7. TI LOCATED ON LCGO STRIPPER OUTLET

WA-TEX 000905

No.	Date	Revisions	By	Chk'd	Dept. Supt.	Eng.	Prof. Engr.	Appr.
1	7/31/73	ISSUED FOR INFORMATION			FE	TA	3/4	
2	11/5/73	ISSUED FOR APPROVAL	LH		FE	TA	9/3	

SCALE | DESIGNED | DRAWN

BECHTEL
HOUSTON

TEXACO INC.
PUGET SOUND PLANT

FLAG FLOW DIAGRAM
REACTOR FEED HEAT AND
EMERGENCY COOLING FCC UNIT

Job No.	Dwg. No.	Rev.
BECHTEL - 10095 TEXACO EST - 3010	3-RA-44	1A

D

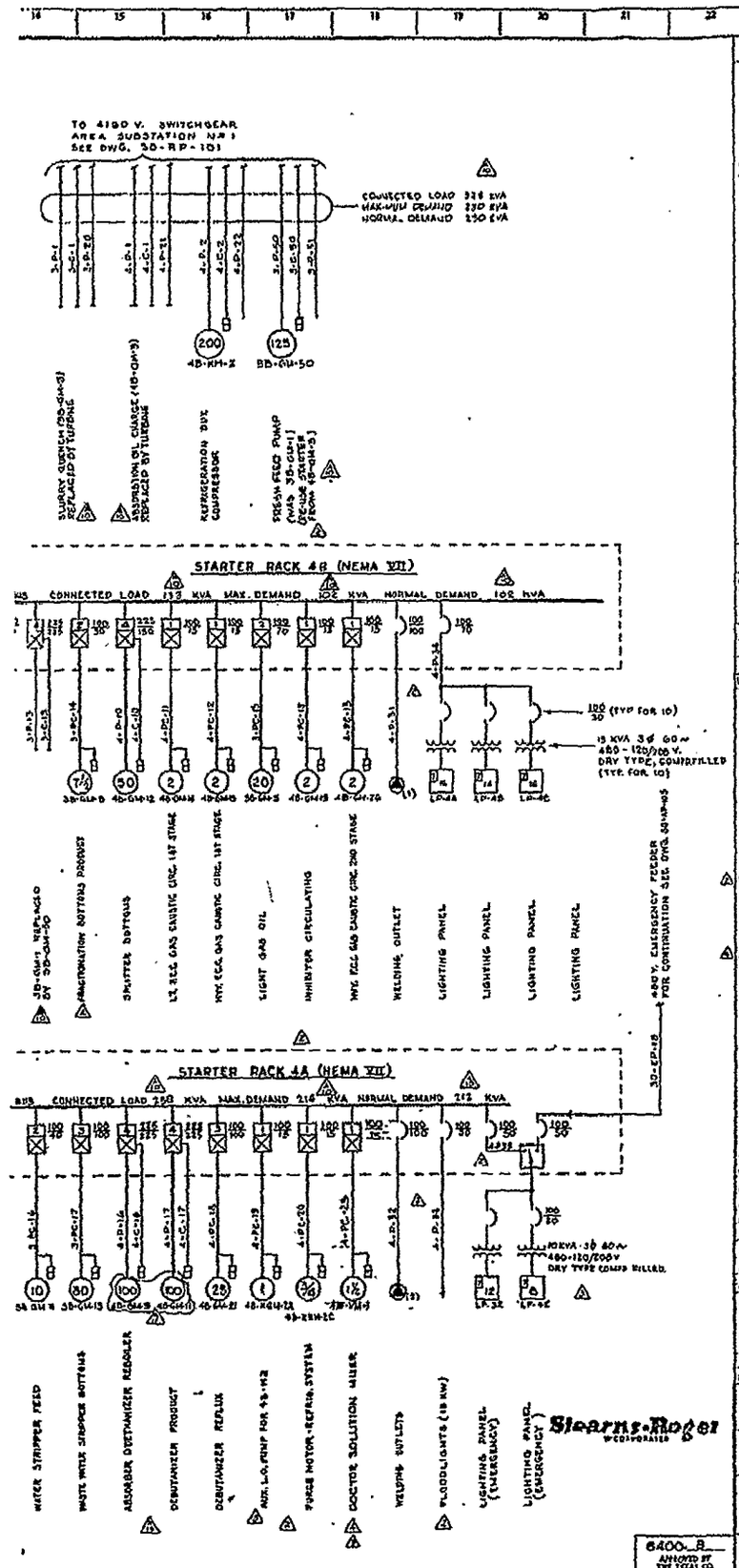

SIZE A

SYMBOLS

- COMBINATION AIR CIRCUIT BREAKER AND STARTER — UPPER NUMBER INDICATES BREAKER FRAME SIZE, LOWER NUMBER INDICATES BREAKER TRIP SETTING, NUMBER IN SQUARE INDICATES NEMA SIZE STARTER
- LIGHTING PANEL - 120/208 V. 4 WIRE, 3 ϕ — INDICATES ENCLOSURE TYPE, NUMBER INDICATES NUMBER OF CIRCUITS
- TRANSFORMER - RATING AS NOTED
- SQUIRREL CAGE INDUCTION MOTOR — NUMBER INDICATES HORSE POWER
- PUSH BUTTON STATION - START-STOP
- AIR CIRCUIT BREAKER — UPPER NUMBER INDICATES BREAKER FRAME SIZE, LOWER NUMBER INDICATES BREAKER TRIP SETTING
- LOAD BREAK DISCONNECT SWITCH
- WELDING OUTLET — NUMBER INDICATES NUMBER OF OUTLETS FOR THE CIRCUIT.
- AUTOMATIC TRANSFER PANEL
- POTHEAD OR STRESS CONE
- HAND-OFF-AUTO SELECTOR SWITCH

REFERENCE DRAWINGS

ONE-LINE DIAGRAM - ELECTRICAL DISTRIBUTION	3B-RP-101
- EMERGENCY POWER	3B-AP-103
CONDUIT & CONDUCTOR SCHEDULE	3-BP-23
	3-BP-27
	6-BP-7
	4-BP-26
[illegible]	3-BP-26

REVISION NOTES

1. CHANGED: 3B-GM-3, & 3B-GM-16 HP RATING, STARTER RACK 4A & 4B DESIGNATION, CONDUIT NOS. DELETED: 4B-GM-27, 4B-GM-23, & WELDING OUTLET CIRCUITS FROM STARTER RACK 3A & 4A. ADDED: PHOSPHATE MIXER, L.O. PUMP, PURGE MOTOR, & FLOODLIGHT LOAD.
2. ADDED: 3B-GM-18, 19, 20, & 4B-VM-1. CHANGED: 3B-GM-16, & 23A HP RATING, 3B-GM-16 CONTROL, 3B-GM-8 STARTER SIZE.

[illegible]	CHANGED WIRE HP RATING MIRS. NO. 4B-GM-3 & 4B-GM-1	[illegible]	[illegible]		[illegible]	[illegible]
[illegible]	ISSUED FOR CONSTRUCTION BECHTEL 100F10095	[illegible]	[illegible]		[illegible]	[illegible]
[illegible]	ISSUED FOR APPROVAL BECHTEL 100F10095	[illegible]	[illegible]		[illegible]	[illegible]
[illegible]	REV. PER EST. 3E00C	[illegible]	[illegible]	[illegible]		
[illegible]	ADDED MCC 3G	[illegible]	[illegible]	[illegible]	[illegible]	[illegible]
[illegible]	CHANGED 3B-GM-18 & 3B-GM-19 HP RATING & SIZE LOAD	[illegible]	[illegible]	[illegible]	[illegible]	[illegible]
[illegible]	CHANGED 3B-GM-16 & 23A HP RATING, 3B-GM-16 CONTROL	[illegible]	[illegible]	[illegible]	[illegible]	[illegible]
[illegible]	SEE REVISION NOTE 2.	[illegible]	[illegible]	[illegible]	[illegible]	[illegible]
[illegible]	CHANGED [illegible] SIZE, 3B-RP-3A CONTROL, [illegible] CIRCUIT	[illegible]	[illegible]	[illegible]	[illegible]	[illegible]
[illegible]	SEE REVISION NOTE 1	[illegible]	[illegible]	[illegible]	[illegible]	[illegible]
[illegible]	ISSUED FOR CONSTRUCTION PER [illegible]	[illegible]	[illegible]	[illegible]	[illegible]	[illegible]
[illegible]	ISSUED FOR APPROVAL	[illegible]	[illegible]	[illegible]	[illegible]	[illegible]
[illegible]	REVISIONS	[illegible]	[illegible]	[illegible]	[illegible]	[illegible]

NONE — DESIGNED BY [illegible] — DRAWN A. A. [illegible]

BECHTEL CORPORATION
SAN FRANCISCO

THE TEXAS COMPANY
PUGET SOUND WORKS

ELECTRICAL ONE-LINE DIAGRAM
F.C.C. & GAS RECOVERY UNIT SHT. 1

6400-B
APPROVED BY THE TEXAS CO. 7-3-57

BECHTEL — 2525 — 3-AP-24 — 11-A

WA-TEX 000906

7.2 VESSEL DRAWINGS

TABLE OF CONTENTS

SECTION 7.2 VESSEL DRAWINGS

Decoking Quench Drum - 3B-C4D 3-DC-40

SIZE D

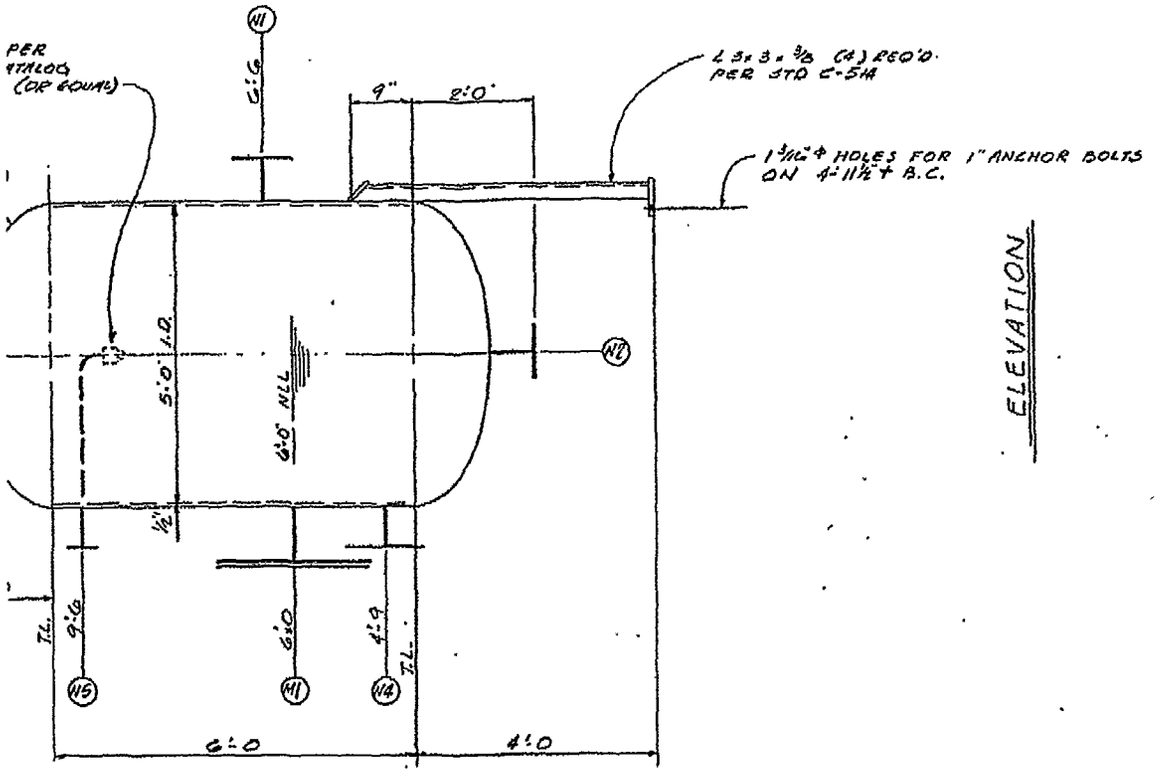

WA-TEX 000909

3	3/21/73	ADDED INSULATION (P.P.)	[illegible]	R	R	[illegible]	[illegible]	
2	2/28/73	RELEASED FOR CONSTR. REV. FULL JET NOZZ. MODEL # ADDED: ORIENT. CHGD NOZZLE N3 FROM 8"	J O H	[illegible]	R	[illegible]	[illegible]	
1	12/[illegible]/72	ISSUED FOR PURCHASE RELEASED SHELL AND HEAD MATERIAL	J O H	[illegible]	R	[illegible]	[illegible]	
0	11/1/72	ISSUED FOR QUOTES	J H	[illegible]		[illegible]	[illegible]	
No		REVISIONS	BY	CHKD	DESIGN SUPV	ENGR	PROJ ENGR	APPR

SCALE 3/8" = 1'-0 DESIGNED [illegible] DRAWN J. HOFFMUIR PROCESS CHIEF ENGR

BECHTEL
HOUSTON

TEXACO INC.
PUGET SOUND PLANT

DECOKING DRUM
ITEM 3B-C40
FCC & GAS RECOVERY UNIT

JOB No.	DRAWING No.	REV.
BECHTEL 10095 TEX EST 3910	3-DC-40	3A

ITEM DESCRIPTION	SPEC	DWG	REMARKS	M/R NO
FIREPROOFING			N.R.	
INSULATION THK			N.R.	
INSULATION SUPPORTS		135-8666		C-31
PLATF & LADDER			N.R.	
PIPE SUPPORT CLIPS			N.R.	
SUPP'TS FOR				
SURF PREP & SHOP PAINT	V-106			C-31
BOLT THREAD LUBRICANTS		93-9179-0		C-31
MANWAY DAVITS		75-8915-6		C-31
NOZZLES & MANWAYS		75-8921-6		C-31
SUPPORT LEGS		C-514		C-31
DOCUMENTS	C-504			C-31
TOLERANCES	F.IM9 & ADD			C-31
VESSEL CONSTRUCTION	F.IM9 & ADD			C-31

REFERENCE

4. REMOVABLE INTERNALS...

3. [redacted]

2. UNLESS OTHERWISE SHOWN OR NOTED
(a) NOZZLE & MANWAY EXTENSION FROM INSIDE OF SHELL TO FLANGE FACE SHALL BE 7" FOR NOZZLES, 12" FOR MANWAYS
(b) ELEVATIONS ARE ABOVE UNDERSIDE OF BASE ℄
(c) [redacted]
(d) ALL BOLT HOLES STRADDLE CENTERLINES (NORTH, SOUTH OR VERTICAL)
(e)

1. VESSEL MFR SHALL SUPPLY AND INSTALL ALL ITEMS SHOWN OR REFERENCED ON THIS DWG UNLESS OTHERWISE NOTED OR INDICATED IN REMARKS COLUMN (AT RIGHT)
INST = INSTALLATION ONLY NR = NOT REQ'D SURN = SUPPLY ONLY

GENERAL NOTES

TEE SPRAY
TLET
NT
TAIN
LET
WAY W/DAVIT
SERVICE & REMARKS
CONNECTIONS

7.3 COMBUSTION EQUIPMENT

TABLE OF CONTENTS

SECTION 7.3 COMBUSTION EQUIPMENT

Data Sheet for 3B-F3

3B-F3	General Arrangement	V.P.10095-F-01-HAC-40-6
	Combination Oil and Gas Burner	V.P.10095-F-01-HAC-67-2

This drawing and the design it covers are the property of BECHTEL. They are merely loaned and on the borrower's express agreement that they will not be reproduced, copied, loaned, exhibited, or used except in the limited way and private use permitted by any written consent given by the lender to the borrower.

FIRED HEATER DATA SHEET

Customer TEXACO INC. Manufacturer FOSTER WHEELER CORP
Location PUGET SOUND PLANT Equip. No. 3B-F3
Unit FCCU EXPANSION Req. No. 10095-F-01
Service REACTOR CHARGE HEATER Item No. 2
Number Required ONE Type V.C.H.C.
* Total Duty per Heater, MM Btu per Hr Absorbed 81.0

PROCESS DESIGN CONDITIONS

*Heater Section	RADIANT	CONVECTION
*Service		
*Heat Absorption, MM Btu per Hr.	81.0	
*Fluid	GAS OIL	
*Flow Rate, Lb per Hr.	473,371	
Flow Rate, BPD		
*Pressure Drop, psi (Allowable)	30 (2)	
Pressure Drop, psi (Calculated) CLEAN / MAX	18/30	
*Average Flux Density, Btu per Hr per Sq Ft (Allowable)/(Calculated)	12000/12000	/
Maximum Flux Density, Btu per Hr per Sq Ft (Allowable)/(Calculated)	/	/
Velocity Limitation	—	
Maximum Inside Flim Temperature, Deg F (Allowable)/(Calculated)	/	/
Fouling Factor	—	
Corrosion or Erosion Characteristics	—	
Inlet Conditions		
*Temperature, Deg F	521	
*Pressure, ~~(psia)~~ (psig)	70 (2)	
*Liquid Flow, Lb per Hr	473,371	
*Vapor Flow, Lb per Hr	—	
*Liquid, (Deg API) (Sp Gr at 60 F)	25.4	
*Vapor, Molecular Weight	—	
*Liquid Viscosity, Cp	0.54	
Outlet Conditions:		
*Temperature, Deg F	750	
*Pressure, ~~(psia)~~ (psig) CLEAN	52	
*Liquid Flow, Lb per Hr	473,371	
*Vapor Flow, Lb per Hr	—	
*Liquid, (Deg API) (Sp Gr at 60 F)		
*Vapor, Molecular Weight	—	
*Liquid Viscosity, Cp	0.24	

Remarks and Special Requirements:
*1. Distillation Data or Composition Attached
2. SELLERS PRESSURE DROP CALCULATIONS SHALL NOT TAKE CREDIT FOR STATIC HEAD BETWEEN HEATER INLETS AND OUTLETS.
* Items So Designated To Be Filled In By Buyer I.B.P. 400°F

No	DATE	REVISIONS	BY	CH'K	APPR
2	2-12-73	GENERAL REVISION, ISSUED FOR CONSTRUCTION	TL	[illegible]	[illegible]
1	9-14-72	ISSUED FOR PURCHASE	TL		[illegible]
0		ISSUED FOR QUOTATION	YB		

ORIGIN

BECHTEL

JOB No 10095
DRAWING No DS-3-F-1 REV 2

RBC SFE FORM 376A-6-71

SHEET 1 OF 6

WA-TEX 000912

MECHANICAL DESIGN CONDITIONS

General

*Plot Limitations | *Stack Limitations

*Tube Limitations | Other Limitations

*Required Drawings

*Structural Design Data: Wind Load _____ Seismic Factor _____

*List of Applicable Standards or Specifications: 1. 3.
2. 4. SEE ATTACHMENT

Coil Design

	Radiant	Convection
*Heater Section		
*Service	PROCESS	
*Design Pressure, psig	150	
*Design Fluid Temperature, Deg F	750	
*Corrosion Allowance: Tubes	1/8"	—
Fittings	1/8"	
Hydrostatic Test Pressure, psig	550	
Number of Passes/Tubes per pass	6 / 18	6 / 12
Overall Tube Length, Ft	33'-6	27'-6
Effective Tube Length, Ft	34'-6	26'-0
Bare Tubes: Number	108	18
Total Exposed Surface, Sq Ft	4860	552
Extended Surface Tubes: Number		54
Total Exposed Surface, Sq. Ft.		14,000
Tube Spacing, Center to Center, In. (Staggered) (In Line)	8	8
Tube Center to Furnace Wall, In. Min	6	
*Stress Relieve	YES - 241 MAX	
*Weld Inspection Requirements, X-Ray or Other	YES - 100%	

Tubes

Vertical or Horizontal	VERT	HORIZ
*Tube Material (ASTM Specification and Grade)	A-200 GR T-9	
Outside Diameter, In	4.5	
Wall Thickness, (Minimum) (Average), In	0.265	
Maximum Tube Wall Temperature, Deg F (Calculated)/(Design)	/900	/900
Inside Film Coefficient (Calculated) (Based on Outside Surface)		
Design Basis for Tube Wall Thickness	CEMS H-1M7	

Description of Extended Surface:

Type	—	FINS
Fin or ~~Stud~~ Material	—	11% CR E 18-8
Fin or ~~Stud~~ Dimensions HEIGHT X THICKNESS	—	1 x 0.105
Fin or ~~Stud~~ Spacing NO PER INCH	—	3
Maximum Fin or Stud Temperature	—	N.A.
Extension Ratio	—	

Plug-Type Headers

Manufacturer and Type		
*Material (ASTM Specification and Grade)		
Nominal Rating		
*Location	NONE	
*Welded or Rolled		

Return Bends

Manufacturer and Type	180° WELDED RETURN BEND	
*Material (ASTM Specification and Grade)	9%Cr-1%Mo	
Nominal Rating or Schedule	TO SUIT TUBE	
*Location	FIREBOX	HEADER BOX

R&C SFE FORM 3760 10-71

MECHANICAL DESIGN CONDITIONS (CONT'D)

Coil Design (Cont'd)

*Heater Section	RADIANT	CONVECTION
*Service		PROCESS
Terminals		
Manufacturer and Type	FLANGED	FLANGED
*Material (ASTM Specification and Grade)	A-182 GR F9	A-182 GR F9
Nominal Rating	TO SUIT TUBE	TO SUIT TUBE
*Location	OUTSIDE F.B.	OUTSIDE H.B.
*Welded or Rolled	WELDED	WELDED
Flange: Size and Rating	150# R.F.	150# R.F.
Location	SEE NOTE 1	
Stress Group To Complete		
*Nozzle Movement:		
*Direction		
*External Nozzle Load		
*Direction		
*Pipe Load Supported By Heater		
*Special Support Brackets Required		

Comments

Crossovers

*Welded or Flanged	WELDED	-
*Pipe Material (ATSM Specification and Grade)	A-200 GR T9	-
Pipe Size and Wall Thickness	4.5 x 0.205	-
Location	INTERNAL	-
Flange Rating	—	-

Tube Supports

Ends, Top, ~~Bottom~~		
Material	A-447 TP11	
Thickness		
Type and Thickness of Insulation	—	
Insulation Reinforcement	—	
Intermediate:		
Material		A-447 TP11
Spacing, Ft		13'-0
Type and Thickness of Coating		
Guides: Location	BOTTOM	
Material	1½ SCH 80 25-12 PIPE	

Notes

1) RADIANT OUTLETS ARE TO BE GROUPED

ASC SFE FORM 376C (8/71)

WA-TEX 000914

MECHANICAL DESIGN CONDITIONS (CONT'D)

Header Boxes
Location CONVECTION SECTION Material CARBON STEEL Thickness 3/16
Insulation: Material CASTABLE, LHV 1:2:4 MIX Thickness 2
Anchoring Material CARBON STEEL CHAIN LINK FENCING
Are Header Box Doors Bolted or Hinged? BOLTED

Burners
Manufacturer and Type JOHN ZINK - COMB GAS & OIL - "MA" Size 24 Number 7
Location RADIANT FLOOR
Size and Type of Pilots 3/4" - GAS - 1-PER BURNER
Heat Release per Burner at Design Excess Air and Draft: (MM Btu per hour)
Normal 14,000,000 Minimum 7,000,000 Maximum 16,800,000
Minimum Distance Burner Centerline to Tube Centerline:
Horizontal 6'-0 MIN. Vertical N.A.

Settings:
Exposed Vertical Walls:
Thickness Hot-Face Temperature: Design Calculated
Wall Construction
Outside Casing: Thickness Material Outside Temperature
Tieback Design and Material NONE Spacing
Support Material
Method of Fastening Tiebacks to Structure

Shielded Vertical Walls:
Thickness 5 Hot-Face Temperature: Design 2000 Calculated 1200
Wall Construction CASTABLE, LHV 1:2:4 MIX
Outside Casing: Thickness 1/4 MIN Material CARBON STEEL Outside Temperature
Tieback Design and Material V-CLIPS, SS TYPE 304 Spacing
Support Material
Method of Fastening Tiebacks to Structure WELDING

Arch:
Thickness 6 Hot-Face Temperature: Design 2000 Calculated
Arch Construction CASTABLE, L.H.V. 1:2:4 MIX
Outside Casing: Thickness 1/4 Material CARBON STEEL Outside Temperature <200
Tieback Design and Material V-CLIPS, SS TYPE 304 Spacing
Support Material
Method of Fastening Tiebacks to Structure WELDING

Floor:
Thickness 6 Hot-Face Temperature: Design 2000 Calculated
Floor Construction CASTABLE, LH 1:4 MIX
Minimum Floor Elevation
Outside Casing: Thickness 1/4 Material CARBON STEEL Outside Temperature <200

Convection Section:
Thickness 5 Design Hot-Face Temperature 2000
Construction CASTABLE, L.H.V. 1:2:4 MIX
Outside Casing: Thickness 3/16 Material CARBON STEEL Outside Temperature <200

H&C SFE FORM 378D (6/71)

MECHANICAL DESIGN CONDITIONS (CONT'D)

Settings (Cont'd)

Tieback Design and Material V-CLIPS, SS TYPE 304

Support Material

Method of Fastening Tiebacks to Structure WELDING

Internal Wall:

Type NONE Dimensions Material

Stack

Number ONE Self-Supporting or Guyed SELF SUPPORT Location TOP OF HEATER

Material CARBON STEEL A-36 Thickness Minimum Thickness 1/4

Inside Metal Diameter 6'-6" EXIT 4'-3" Height Above Grade 182'-5" Stack Length 122'-9"

Lining: Material Thickness

Type of Material or Reinforcement NONE

Extent of Lining

Dampers

Location: Stack or Bottom Air Plenum STACK

Material CARBON STEEL - 1/4 MIN Multiple or Single Leaf MULTIPLE

Description of Provision for Operation from Grade WINCH

Hot Ducts, Breeching, Flues, and Collectors

Material CARBON STEEL - 1/4 THICK ASTM Specification A-36 Size

Insulation: Type CASTABLE - LHV 1:2:4 MIX Thickness 1 1/2

Type of Anchoring Material CARBON STEEL CHAIN LINK FENCING

Size of Access Door into Breeching NONE

~~Cold Air Ducts and~~ Plenum

Material CARBON STEEL - 1/4" THICK ASTM Specification Size

Miscellaneous

Overall Dimensions of Furnace "CONV INLET, RAD OUTLET"

Platforms: Location BOTT RAD — SOOTBLOWERS — DECOKING CONN — STACK

Width MIN. 2'-6 3'-0 3'-0 CLEAR

Type of Floor 1/4 - CHECKERED PLATE

Stairs: Location TO BOTTOM RADIANT PLATFORM

Ladders: Location 1) FROM GRADE TO SOOTBLOWER PLATF W/ STEP-OFF AT RAD PLATF 2) SOOTBLOWER PLATF TO DECOKING CONN 3) SOOTBLOWER PLATF TO STACK PLATF

Access Doors: Location and Size 1) FLOOR 2) STACK

Observation Doors: Location and Size 1) 7-OBS DOORS RAD 2) 6-RAD FLOOR PEEPS

Miscellaneous Connections (Number and Size):

Draft 1"-150# RF - 6 Flue Gas Sample 1"-150# RF - 4

Temperature 1 1/2"-150# RF - 8 Smothering Steam 2" IPS - 6

Header Box Drain 1" - IPS - 2 Stack Drain 1 1/2" IPS - 1

Coil Drains NONE Other

MECHANICAL DESIGN CONDITIONS (CONT'D)

Painting and Galvanizing Requirements HEATER STEEL: SURFACE PREP. SSPC-SP3, PAINT 1.5 MILS MIN. D.F.T., TO FEDERAL SPEC TT-P-86, TYPE II
2) PLATFORMS, LADDERS, STAIRS AND LIGHT STRUCTURAL - GALVANIZED PER SPEC S-2M
3) STACKS, METALLIZED ON EXTERIOR USING THE METCO 120 SYSTEM

Are Painter's Trolley and Rail Included? NONE
Extent of Tube-Handling Facilities NONE
Explosion Doors: Location and Size 2 - 18" x 18"

Special Equipment (Soot Blowers, Air Preheaters, Noise Suppressors, Fans, Etc.)
1) 18 - TUBE SKIN THERMOCOUPLES
2) 4 - ROTARY SOOTBLOWERS W/ AUTOMATIC CONTROL PANEL
3) 1 - NOISE PLENUM

COMBUSTION DESIGN CONDITIONS

*Type of Fuel	OIL	GAS
*Excess Air, Percent	30%	20%
Guaranteed Efficiency, Percent (LHV) (See Note)	81.0	
Calculated Efficiency, Percent (LHV)	82.0	
Radiation Loss, Percent of Heat Release (LHV)	1.5	
Flue Gas Temperature, Deg F, Leaving Radiant Section	1530	
Flue Gas Termperature, Deg F, Leaving Convection Section	670	650
Flue Gas Mass Velocity Through Convection Section Lb/Sp Ft/Sec	0.44	0.40
Draft at Bridge Wall, In. H O 30% EXCESS AIR & 120% OF DESIGN	0.10	
Draft at Burners, In. H O	0.45	
*Ambient Air Temperature, Deg F	60	
*Altitude, Ft Above Sea Level	95	
Calculated Heat Release, MM Btu per Hr (LHV)	98.8	
Volumetric Heat Release, Btu per Hr per Cu Ft		

Note: A fuel saving of _____ MM Btu per hr will offset a $1,000 increase in furnace cost (erected).
A tube side pressure decrease of _____ psi will offset a $1,000 increase in furnace cost (erected).

FUEL CHARACTERISTICS

	OIL			GAS		
*Type of Fuel	MAX.	NORM.	MIN.	MAX.	NORM.	MIN
*Heating Value: HHV	18,560			1713	1211	869
LHV	17,000			1542	1090	782

*See Fuel Data Sheet

REFINERY FUEL GAS:	MAX.	NORM	MIN
PRESSURE PSIG	70	60	47
SPECIFIC GRAVITY	1.095	0.83	0.64
FUEL OIL:			
PRESSURE PSIG	250	235	200
TEMP °F	310	280	250
API GRAVITY	12	10	10
VISCOSITY SSU @ PT	95-102	150-170	280-320
SULFUR, PERCENT (BY WT)		1.2	

FUEL PRESSURES ARE UPSTEAM OF CONTROL VALVE

R & D SFE FORM 370F (6/71)

DS-3-F-71 ? 6 6

WA-TEX 000917

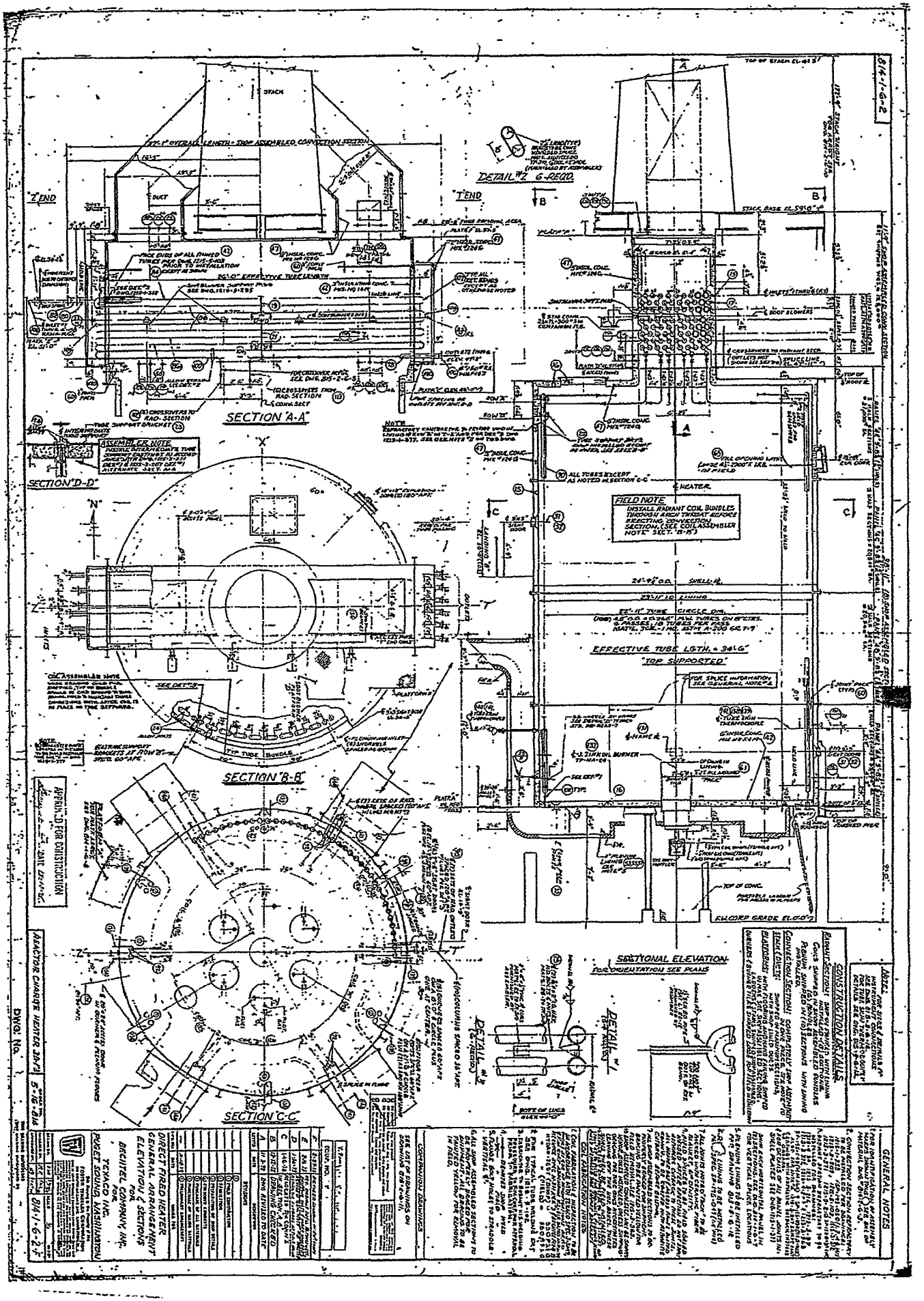
SECTION 'A-A'
SECTION 'B-B'
SECTION 'C-C'
SECTION 'D-D'
DETAIL #2 G-REQD.
SECTIONAL ELEVATION
FOR ORIENTATION SEE PLANS
EFFECTIVE TUBE LGTH. = 36'-0"
"TOP SUPPORTED"
FIELD NOTE
INSTALL RADIANT COIL BUNDLES THROUGH ARCH THROAT REFRACTORY SECTION. CONVECTION SECTION. (SEE COIL ASSEMBLER NOTE" SECT. "B-B")
"T" END
"L" END
STACK
STACK BASE EL 591'-0" ±
TOP OF STACK EL 681'-2"
ELCORP GRADE EL 0'-0"
CONSTRUCTION DETAILS
GENERAL NOTES
REACTOR CHARGE HEATER 39A-F
DIRECT FIRED HEATER
GENERAL ARRANGEMENT
ELEVATION & SECTIONS
FOR
TEXACO INC.
PUGET SOUND, WASHINGTON
BECHTEL CORPORATION INC.
DWG. No. B14-1-6-2-2
APPROVED FOR CONSTRUCTION
WA-TEX 000918

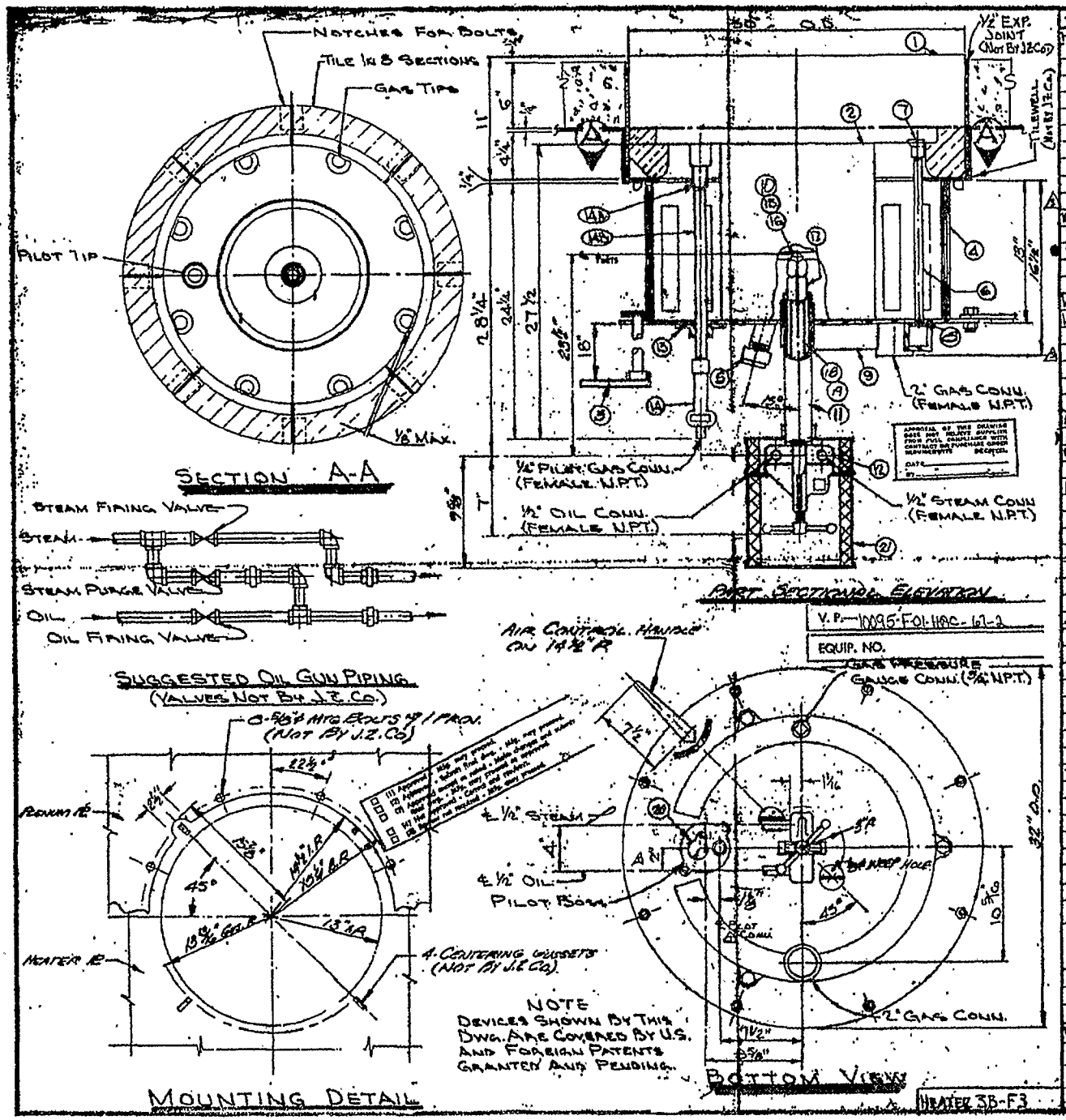

— PARTS LIST PER BURNER —

ITEM	QTY.	DESCRIPTION	PART No.	MAT'L
1	1	BURNER FLOOR TILE	MA-T-24B	B.F.C.
2	1	REGEN TILE	URG-19K-16B	C.F.141-A
3	1	AIR CONTROL ASS'Y	ST-2003	
4	1	AIR REGISTER ASSY	ST-2047	STEEL
5	2	PIPE CPLG'S & BUSH'G HEX	2"	STEEL
6	8	GAS NIPPLES	½" PIPE	STEEL
7	8	GAS TIPS	PAT.824-A	303 S.S.
8	28	GASKET	224-2½	ASB
9	1	GAS MANIFOLD	DR-21-24	C.I.
10	1	ATOMIZER SPUD	PAT-353-9	STEEL
10A				
11	1	OIL GUN GUIDE TUBE	1½ D.-½ WALL	STEEL
12	1	OIL BODY ASS'Y	CASTINGS	
13	1	PILOT BOSS	DSS-¾	C.I.
14	1	PILOT MIXER	HFC-¾	C.I.
14A	1	PILOT TIP	J-L-¾	CR. NI.
14B	1	PILOT NIPPLE	¾" PIPE	STEEL
15	1	OIL TIP	96B	CR. NI.
16	1	ATOMIZER	61-B	303 S.S.
17	1	SLEEVE	22B	CR. NI.
18	1	OIL TUBE	⅜" PIPE	STEEL
19	1	STEAM TUBE	1" PIPE	STEEL
20	1	LIGHTING PORT COVER	21-B	C.I.
21	1	OIL BODY MANIFOLD	STAMP	

FOR PARTS & DETAILS SEE J.Z. DWG. CA-ST-2003

FOR OPERATING PRESSURE SEE J.Z. CAPACITY CURVE # 209/P
F.W. CONTRACT N° 516-814

HEAT RELEASE PER BURNER (NET)
MAX. (NORMAL) CAPACITY
MAX'M: 14,000,000 BTU/HR.
MIN: 1,000,000 BTU/HR.

FUEL GAS	MAX.	NORMAL	MIN.
BTU/SCF (LHV)	1342	1270	1282
SP. GR.	0.655	0.85	0.648

GAS TIP DRILLING: 6-¼" ø (90° APART) & 6-5/32 ø
FIRING PORTS/CO-V-789-D
FUEL OIL 17,000 BTU/LB. (LHV)
API GR: 20
RECOMMENDED ATOMIZING VAPOR RATIO 0.50 LBS/LB

PILOT GAS PRESSURE: 6-5 PSIG
PILOT MIXER ORIFICE DRILLED: 1 ¼ ø

REVISION 3: ADDED PURGE CONNECTION MAT'L. MAR. 5-7-73
REVISION 2: CORRECTED PILOT BOSS PART NO. 4-22-
REVISION 1: REVISED PER CUST. APPROVED PRINT 1-25-72
USER: BECKFIELD GEORGE, VIRGINIA
JOBSITE: PUGET SOUND, WASHINGTON
P.O. No. NO-5-16-814-1 SHOP ORDER 626 ANT

JOHN ZINK COMPANY
TULSA OKLAHOMA

DETAIL JOHN ZINK MA-LA-
COMPL. OIL & GAS BURNER
(7" PIPE'D)
FOR: FOSTER WHEELER CORP.

DRAWN R.D.
CHECKED J.P.
SCALE: NONE

APPROVED
DATE 12-8-72

DWG FILE 516-814

WA-TEX 000919

HEATER 3B-F3

7.4 HEAT EXCHANGERS

TABLE OF CONTENTS

SECTION 7.4 HEAT EXCHANGERS

Data Sheet	Emergency Cooler	3B-E40
3B-E40	Emergency Cooler	3-DE-1

EXCHANGER SPECIFICATION SHEET

1	CUSTOMER AND PROJECT LOCATION TEXACO INC.		EXCHANGER MFR. SCOTT CO.
	PLANT PUGET SOUND		REQ. NO. E-61
3	EXCHANGER NO. 3B-E40		ITEM NO 1
4	SERVICE OF UNIT EMERGENCY COOLER		
5	SIZE	TYPE	CONNECTED IN SERIES PARALLEL
6	SURFACE PER UNIT 11,000 EFF.	SHELLS PER UNIT ONE	SURFACE PER SHELL EFF GR.

PERFORMANCE OF ONE UNIT

		BOX ~~SHELL~~ SIDE	TUBE SIDE
7	FLUID CIRCULATED	WATER	GAS OIL
8	TOTAL FLUID ENTERING LBS/HR	1,800,000	473,371
9	VAPOR		
10	LIQUID	1,800,000	473,371
11	STEAM		
12	NON-CONDENSIBLES		
13	FLUID VAPORIZED OR CONDENSED		
14	STEAM CONDENSED		
15	GRAVITY-LIQUID API		25.6
16	VISCOSITY-LIQUID Cp		0.44@750°F 1.5@380°F
17	MOLECULAR WEIGHT-VAPORS		
18	SPECIFIC HEAT-LIQUIDS	BTU/#	BTU/#
19	LATENT HEAT-VAPORS	B.T.U/#	BTU/#
20	TEMPERATURE IN	50 °F	750 °F
21	TEMPERATURE OUT	150 °F	250 °F
22	OPERATING PRESSURE PSIG		
23	NUMBER OF PASSES		6
	VELOCITY	FT/SEC	5.8 FT/SEC
	PRESSURE DROP ALLOW/CALC	#/SQ IN.	20/20 #/SQ IN
26	FOULING RESISTANCE MIN		
27			

28 HEAT EXCHANGED - BTU/HR 180,000,000 M.T.D. ~~(CORRECTED)~~ 325

29 TRANSFER RATE - SERVICE 50 CLEAN ACTUAL FOULING FACTOR

CONSTRUCTION

30	DESIGN PRESSURE	#/SQ.IN	150 #/SQ IN
31	TEST PRESSURE	#/SQ.IN	315 #/SQ IN
32	DESIGN TEMPERATURE	°F	800 °F

33 TUBES C.S. A-53 GR B NO 234 O.D. 4.5 BWG 0.237 AVG LENGTH 40'-0" PITCH 8" ▲◆□◆

34	SHELL	I.D. O.D.	THICKNESS
35	SHELL COVER		FLOATING HEAD COVER
36	CHANNEL		CHANNEL COVER
37	TUBE SHEETS - STATIONARY C.S. 1/2" THK		FLOATING
38	BAFFLES - CROSS	TYPE	THICKNESS
39	BAFFLE - LONG	TYPE	THICKNESS
40	TUBE SUPPORTS		THICKNESS
41	GASKETS		
42	CONNECTIONS - SHELL - IN	OUT	RATING
43	-CHANNEL-IN	OUT	RATING
44	CORROSION ALLOWANCE - SHELL SIDE		TUBE SIDE
45	CODE REQUIREMENTS	TEMA CLASS	SPEC. E-1D9
46	WEIGHTS - EACH SHELL	BUNDLE	FULL OF WATER

47 NOTE INDICATE AFTER EACH PART WHETHER STRESS RELIEVED (S R) AND WHETHER RADIOGRAPHED (X-R)

48 REMARKS - FOR ADDITIONAL INFORMATION SEE DRAWING 10095-3-DE-1

REV.	DATE					JOB NO	DRWG. NO.	REV.
	8-1-73	ISSUED FOR CONSTRUCTION	TL	RL	[illegible]	10095	DS-3-E-19	0

FORM H-158 PART B 9/66

SIZE D (A9A)

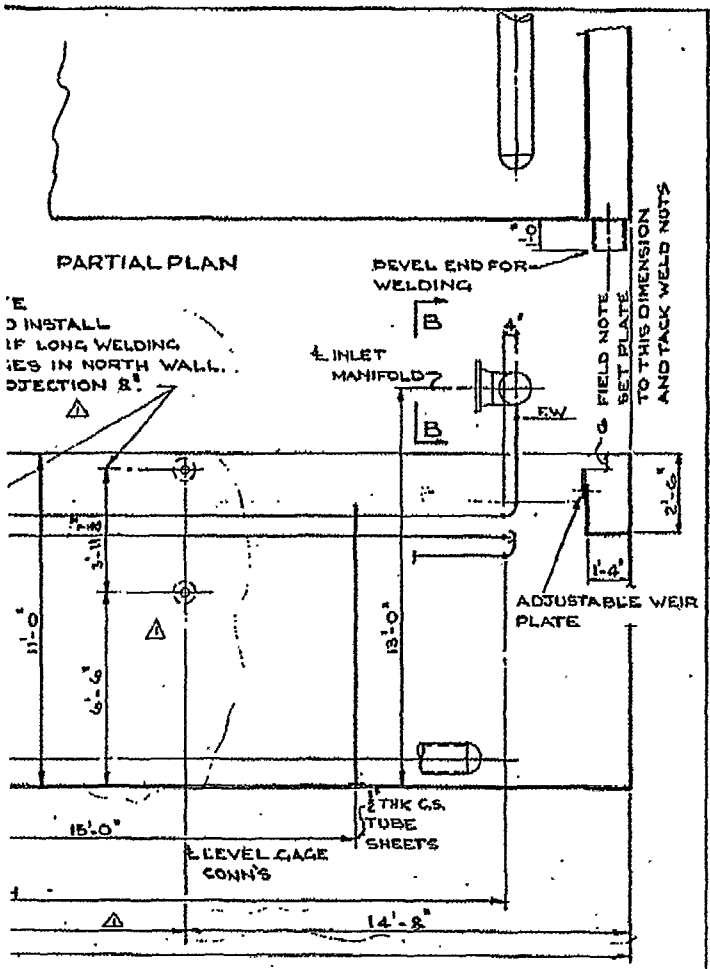

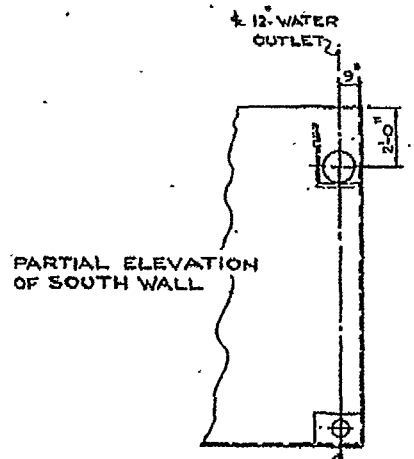

LIST OF MATERIAL

ITEM	QUAN	DESCRIPTION	ORDER NO
1	ONE	EMERGENCY EXCHANGER	E-61

GENERAL NOTES

1 FOR LOCATION SEE PLOT PLAN DRAWING 3-RA-42

2 BOX TO BE FABRICATED FROM ¼" C.S. ℄ AND SHIPPED TO SITE IN SECTIONS:
FLOOR IN TWO SECTIONS
END WALLS & SIDE WALLS, IN COMPLETE PANELS.

REFERENCE DRAWINGS

PLOT PLAN	3-RA-42
FOUNDATION DETAIL	

NO.	DATE	REVISIONS	BY	CHK	ENGR APPR	CHIEF DRFT	PROJ ENGR	CUST
2	7/31	ADDED INST CONNECTIONS	MC			TAT	DHS	
1	7/24	ISSUED FOR PURCHASE / CONSTRUCTION	PL	RAS				

SCALE | DESIGNED | DRAWN

BECHTEL CORPORATION

SAN FRANCISCO HOUSTON NEW YORK

TEXACO INC.

PUGET SOUND PLANT

ARRANGEMENT OF EMERGENCY EXCHANGER 3B-E40

JOB No.	DRAWING No.	REV.
BECHTEL - 10005	3 - DE - 1	1
TEXACO REF - 3910		

WA-TEX 000923

7.5 PUMPS

TABLE OF CONTENTS

SECTION 7.5 PUMP DATA AND CURVES

Summary Table 7.5-1

Data Sheets - All Pumps

Pump Curves - All Pumps

Table 7.5-1
Centrifugal Pump Summary Sheet
Plant 3B FCC Unit
Anacortes, Washington

	Performance Data								Construction Data								Driver Data			
	Flow Temp °F	GPM @ P.T.	Design Flow PSIG		Sp. GR @ P.T.	NPSH Feet Required	B.H.P.		Max Wrk'g PR PSIG	Material		Impeller Dia. Inches		No. of Stages	Shaft Seal	RPM	Rated H.P.	Type	Full Load Amps
Service		Design	Suction	Discharge			Design	Max		Case	Impeller	Rated	Max.						
Overhead Reflux	100	690	6	63	0.75	7.0	32	36	266	C.I.	C.I.	7-1/16	7-1/2	1	Mech.	3550	36	Turb	-
Slurry Quench	675	2380	11	84	0.76	8.0	142	175	300	11-13 Cr.	11-13 Cr.	15-3/8	16-1/2	1	Packed	1750	156	Turb	-
Fresh Feed	410	1018	3	130	0.78	9.0	105.5	117	667	Steel	C.I.	10-3/4	13-1/4	1	Mech.	3600	125	Motor	16.8
Spare	410	1018	3	130	0.78	9.0	105.5	117	667	Steel	C.I.	10-3/4	13-1/4	1	Mech.	3550	117	Turb	-

CENTRIFUGAL PUMP DATA SHEET

JOB NO. 10095 ITEM NO 3B-G50A
PURCHASE ORDER NO. 10095-G01
REQUISITION NO. 10095-G01
INQUIRY NO.
DATE REVISION

APPLICABLE TO: PROPOSALS ○ PURCHASE ○ AS BUILT ○
NOTE ( ) INDICATES INFORMATION TO BE COMPLETED BY PURCHASER;
☐ BY MANUFACTURER

FOR TEXACO INC. SITE PUGET SOUND
UNIT FLUID CATALYTIC CRACKING SERVICE FCC FRESH FEED
NO. PUMPS REQ'D 2 NO. MOTORS REQ'D 1 ITEM NO. 3B-G50 PROVIDED BY PUMP MFR MTD BY FIELD
NO. TURBINES REQ'D 1 ITEM NO 3B-G50A PROVIDED BY EXISTING MTD BY FIELD
PUMP MFR BYRON JACKSON SIZE AND TYPE 4X6X13¼H DSJ SERIAL NO. 731-H-0013/12

OPERATING CONDITIONS, EACH PUMP

LIQUID FCC FEED U.S. GPM at PT. NOR. 1018 RATED
DISCH. PRESS., PSIG 130
PT. F. NOR. 410 MAX. SUCT. PRESS., PSIG MAX. RATED 3.4
SP GR at PT 0.78 DIFF. PRESS., PSI 126.6
VAP PRESS. at PT, PSIA 11.8 DIFF. HEAD, FT 375
VIS. at PT, Ssu CP 1.0 NPSHA, FT 9, CORRECTED
CORR/ERDS CAUSED BY HYD. HP

PERFORMANCE

PROPOSAL CURVE NO 2771-1
RPM 3550 NPSHR (WATER) 9
EFF. 71% BHP RATED 105.5
MAX. BHP RATED IMP 117
MAX HEAD RATED IMP 480
MIN. CONTINUOUS GPM 110
ROTATION (VIEWED FROM CPLG END) CCW

CONSTRUCTION

NOZZLES	SIZE	RATING	FACING	LOCATION
SUCTION	6	300#	RF	TOP
DISCHARGE	4	300#	RF	TOP

CASE-MOUNT ☒CENTERLINE ☐FOOT ☐BRACKET ☐VERT (TYPE)
SPLIT ☐AXIAL ☒RAD: TYPE VOLUTE ☐SGL ☒DBL ☐DIFFUSER
PRESS ☐MAX. ALLOW. 667 PSIG 60 F. ☐HYDRO TEST 1000 PSIG
CONNECT ☒VENT ☒DRAIN ☐GAGE
IMPELLER DIA ☐RATED 10 9/16 (3) ☐MAX 13¼ ☐TYPE: D.S.
MOUNT ☐BETWEEN BRGS ☒OVERHUNG ☐WEAR RG. DIAM./CLRNC. 0.023
BEARINGS-TYPE: ☐RADIAL ND-3214LR ☐THRUST ND 4531215A
LUBE. ☐RING OIL ☐FLOOD ☐OIL MIST ☒SLINGER ☐PRESSURE
COUPLING ☐MFR FAST ☐MODEL B
DRIVER HALF MTD BY: ○PUMP MFR ○DRIVER MFR ☒PURCHASER
PACKING. ☐MFR & TYPE ☐SIZE/NO. OF RINGS
MECH. SEAL. ☐MFR & MODEL BW-QB API CLASS. CODE BSTFT
☐MFR CODE QB-2500-5D4K

SHOP TESTS

☒NON-WIT PERF ○WIT PERF
○NON-WIT HYDRO ☒WIT HYDRO
○NPSH REQ'D ○WIT NPSH
☒SHOP INSPECTION
○DISMANT & INSP AFTER TEST
○OTHER

MATERIALS

API CASE/TRIM CLASS ○
GEMS P-2M7
GEMS P-2B1
CASE - F.T.SEAL
BASEPLATE. ☐ FSDR

AUXILIARY PIPING

○C.W. PIPE PLAN F ○CU: ○S.S.: ○TUBING: ○PIPE
☐TOTAL COOLING WATER REQ'D, GPM 3/0 ○SIGHT F.I. REQ'D
○PACKING COOLING INJECTION REQ'D: ☐TOTAL GPM ☐PSIG
○SEAL FLUSH PIPE PLAN 21 ☒C.S. ○S.S ○TUBING ☒PIPE SCH 80 SOCK WELD
○EXTERNAL SEAL FLUSH FLUID ☐GPM ☐PSIG
○AUXILIARY SEAL PLAN ○C.S. ○S.S ○TUBING ○PIPE
○AUX. SEAL QUENCH FLUID WATER QUENCH PIPING BY PUMP MFR.

VERTICAL PUMPS

PIT OR SUMP DEPTH ○
MIN. SUBMERGENCE REQ'D. ☐
COLUMN PIPE ☐FLANGED ☐THREADED
LINE SHAFT ☐OPEN ☐ENCLOSED
BRGS ☐BOWL ☐LINE SHAFT
BRG LUBE ☐WATER ☐OIL ☐GREASE
FLOAT & ROD ○CS ○SS ○BRZ ○NONE
FLOAT SWITCH ☐
PUMP THRUST, LB ☐UP ☐DOWN

MOTOR DRIVER

HP 125 RPM 3600 FRAME 405TS VOLTS/PHASE/CYCLES 4000 V-3P-60
MFR. AC BEARINGS BALL LUBE GRS
TYPE HORIZ INSUL B FULL LOAD AMPS 16.8
ENC TEFC TEMP RISE, C 80 LOCKED ROTOR AMPS 110
○VHS ○VSS VERT. THRUST CAP., LB SERVICE FACTOR 1.0

APPROX WT. PUMP & BASE 2000
MOTOR 2320 TURBINE

API STANDARD 610 GOVERNS UNLESS OTHERWISE NOTED

FORM NO 130 (REVISED APRIL 71)

NO	DATE							
3	1-22-74	ISSUED FOR CONSTRUCTION						
2	1/15/73	REVISED SEAL FLUSH PLAN	JT			JOB NO	DRAWING NO	REV.
1	12/12/72	ISSUED FOR PURCHASE	JT	TAN	MB	10095	DS-3B-G-1	3
0	10/2/72	ISSUED FOR QUOTATION	JT			SHEET 1 OF 1		

BECHTEL

WA-TEX 000927

CENTRIFUGAL PUMP DATA SHEET

JOB NO. 10095 ITEM NO 3B-G2
PURCHASE ORDER NO
REQUISITION NO.
INQUIRY NO.
DATE . REVISION

APPLICABLE TO: PROPOSALS ○ PURCHASE ○ AS BUILT ○
NOTE ( ) INDICATES INFORMATION TO BE COMPLETED BY PURCHASER;
☐ BY MANUFACTURER

FOR TEXACO, INC. SITE PUGET SOUND
UNIT ECC UNIT SERVICE OVERHEAD REFLUX
NO PUMPS REQ'D NO. MOTORS REQ'D ITEM NO. PROVIDED BY MTD BY
NO. TURBINES REQ'D 1 ITEM NO. 3B-GT2 PROVIDED BY MTD BY
PUMP MFR UNITED SIZE AND TYPE 4" TC-AA SERIAL NO. 74799/800 SPARE

OPERATING CONDITIONS, EACH PUMP

LIQUID GASOLINE U.S. GPM at PT, NOR 690 RATED
DISCH. PRESS., PSIG 62.6
PT. F. NOR 100 MAX SUCT. PRESS., PSIG MAX RATED 6.0
SP GR at PT 0.75 DIFF. PRESS., PSI 56.6
VAP. PRESS. at PT, PSIA 16.2 DIFF. HEAD, FT 174
VIS. at PT, Sus CP .75 NPSHA, FT 15
CORR/EROS CAUSED BY HYD. HP

PERFORMANCE

PROPOSAL CURVE NO.
RPM 3550 NPSHR (WATER)
EFF. 73.5 BHP RATED 32
MAX. BHP RATED IMP 36
MAX. HEAD RATED IMP 210
MIN. CONTINUOUS GPM —
ROTATION (VIEWED FROM CPLG END) CCW

CONSTRUCTION

NOZZLES	SIZE	RATING	FACING	LOCATION
SUCTION	6"	250#	FF	TOP
DISCHARGE	4"	250#	FF	TOP

CASE-MOUNT ☒ CENTERLINE ☐ FOOT ☐ BRACKET ☐ VERT. (TYPE)
SPLIT ☐ AXIAL ☒ RAD; TYPE VOLUTE ☐ SGL ☒ DBL ☐ DIFFUSER
PRESS ☐ MAX ALLOW. 266.6 PSIG 600° F. ☐ HYDRO TEST 400 PSIG
CONNECT ☒ VENT ☒ DRAIN ☐ GAGE
IMPELLER DIA ☒ RATED 7 11/16 ☒ MAX. 7 1/2 ☐ TYPE:
MOUNT ☐ BETWEEN BRGS ☒ OVERHUNG ☐ WEAR RG DIAM./CLRNC
BEARINGS-TYPE ☒ RADIAL BALL ☒ THRUST BALL
LUBE ☒ RING OIL ☐ FLOOD ☐ OIL MIST ☐ FLINGER ☐ PRESSURE
COUPLING ☒ MFR FALK ☐ MODEL SPACER TYPE
DRIVER HALF MTD BY ○ PUMP MFR ○ DRIVER MFR ○ PURCHASER
PACKING ☐ MFR & TYPE ☐ SIZE/NO. OF RINGS 8 - 3/8"
MECH SEAL ☐ MFR & MODEL API CLASS. CODE
☐ MFR CODE

SHOP TESTS

○ NON-WIT PERF ○ WIT PERF
○ NON-WIT HYDRO ○ WIT HYDRO
○ NPSH REQ'D ○ WIT NPSH
○ SHOP INSPECTION
○ DISMANT & INSP AFTER TEST
○ OTHER

MATERIALS

API CASE/TRIM CLASS ○
BASEPLATE. ☐

AUXILIARY PIPING

○ C.W. PIPE PLAN ○ CU; ○ S.S., ○ TUBING; ○ PIPE
☐ TOTAL COOLING WATER REQ'D, GPM ○ SIGHT F.I. REQ'D
○ PACKING COOLING INJECTION REQ'D: ☐ TOTAL GPM ☐ PSIG
○ SEAL FLUSH PIPE PLAN ○ C.S. ○ S.S. ○ TUBING ○ PIPE
○ EXTERNAL SEAL FLUSH FLUID ☐ GPM ☐ PSIG
○ AUXILIARY SEAL PLAN ○ C.S. ○ S.S. ○ TUBING ○ PIPE
○ AUX. SEAL QUENCH FLUID

VERTICAL PUMPS

PIT OR SUMP DEPTH ○
MIN. SUBMERGENCE REQ'D ☐
COLUMN PIPE. ☐ FLANGED ☐ THREADED
LINE SHAFT ☐ OPEN ☐ ENCLOSED
BRGS. ☐ BOWL. ☐ LINE SHAFT
BRG. LUBE ☐ WATER ☐ OIL ☐ GREASE
FLOAT & ROD ○ C.S ○ S.S ○ BRZ ○ NONE
FLOAT SWITCH ☐
PUMP THRUST, LB ☐ UP ☐ DOWN

MOTOR DRIVER

HP RPM FRAME VOLTS/PHASE/CYCLES
MFR BEARINGS LUBE
TYPE INSUL FULL LOAD AMPS
ENC TEMP RISE, C LOCKED ROTOR AMPS
○ VHS ○ VSS VERT THRUST CAP., LB SERVICE FACTOR

APPROX. WT. PUMP & BASE
MOTOR TURBINE

API STANDARD 610 GOVERNS UNLESS OTHERWISE NOTED (1) EXISTING PUMP- INSTALLED NEW TURBINE DRIVER.

FORM NO. 130 (REVISED APRIL 71)

NO	DATE			JOB NO.	DRAWING NO.	REV.
D	1-22-74	ISSUED FOR CONST.	JES TG	10095	DS-3-G-2	D

SHEET 1 OF 1

WA-TEX 000928

CENTRIFUGAL PUMP DATA SHEET

JOB NO. 10095 ITEM NO. 3B-G3
PURCHASE ORDER NO.
REQUISITION NO.
INQUIRY NO.
DATE REVISION

APPLICABLE TO: PROPOSALS ○ PURCHASE ○ AS BUILT ○
NOTE ( ) INDICATES INFORMATION TO BE COMPLETED BY PURCHASER:
☐ BY MANUFACTURER

FOR TEXACO, INC. SITE PUGET SOUND
UNIT FCC UNIT SERVICE SLURRY QUENCH PUMP
NO. PUMPS REQ'D NO. MOTORS REQ'D ITEM NO. PROVIDED BY MTD BY
NO. TURBINES REQ'D 1 ITEM NO. 3B-GT3 PROVIDED BY MTD BY
PUMP MFR BINGHAM SIZE AND TYPE 8X10X16 1/2 CF-H-S SERIAL NO. 33086/87

OPERATING CONDITIONS, EACH PUMP

LIQUID SLURRY OIL U.S. GPM at PT. NOR. 2380 RATED
DISCH. PRESS., PSIG 83.7
PT. F. NOR. 675 MAX. SUCT. PRESS., PSIG MAX. RATED 11
SP GR at PT 0.763 DIFF. PRESS., PSI 72.7
VAP PRESS. at PT. PSIA 17 DIFF. HEAD, FT 220
VIS. at PT. Sec .43 CS NPSHA, FT 27
CORR/EROS CAUSED BY HYD. HP

PERFORMANCE

PROPOSAL CURVE NO.
RPM 1760 NPSHR (WATER) 27
EFF. 71 BHP RATED 142
MAX. BHP RATED IMP 175
MAX. HEAD RATED IMP 250
MIN. CONTINUOUS GPM —
ROTATION (VIEWED FROM CPLG END) CCW

CONSTRUCTION

NOZZLES	SIZE	RATING	FACING	LOCATION
SUCTION	10"	300#	RJ	END
DISCHARGE	8"	300#	RJ	TOP

CASE-MOUNT ☒ CENTERLINE ☐ FOOT ☐ BRACKET ☐ VERT. (TYPE)
SPLIT ☐ AXIAL ☐ RAD; TYPE VOLUTE ☐ SGL ☒ DBL ☐ DIFFUSER
PRESS ☐ MAX. ALLOW. 300 PSIG 60° F. ☐ HYDRO TEST 450 PSIG
CONNECT ☒ VENT ☒ FRAIN ☐ GAGE
IMPELLER DIA ☐ RATED 15 3/8 ☐ MAX. 16 1/2 ☐ TYPE: CLOSED
MOUNT ☐ BETWEEN BRGS ☒ OVERHUNG ☐ WEAR. RG. DIAM./CLRNC.
BEARINGS-TYPE ☐ RADIAL BALL ☒ THRUST BALL
LUBE ☒ RING OIL ☐ FLOOD ☐ OIL MIST ☐ FLINGER ☐ PRESSURE
COUPLING ☐ MRF FALK ☐ MODEL SPACER TYPE
DRIVER HALF MTD BY: ○ PUMP MFR ○ DRIVER MFR ○ PURCHASER
PACKING: ☐ MFR & TYPE ☐ SIZE/NO. OF RINGS
MECH. SEAL ☐ MFR & MODEL API CLASS. CODE
☐ MFR OCDE

SHOP TESTS

○ NON-WIT PERF ○ WIT PERF
○ NON-WIT HYDRO ○ WIT HYDRO
○ NPSH REQ'D ○ WIT NPSH
○ SHOP INSPECTION
○ DISMANT & INSP AFTER TEST
○ OTHER

MATERIALS

API CASE/TRIM CLASS ○
BASEPLATE ☐

AUXILIARY PIPING

○ C.W. PIPE PLAN ○ CU; ○ S.S.; ○ TUBING; ○ PIPE
☐ TOTAL COOLING WATER REQ'D, GPM ○ SIGHT F.I. REQ'D
○ PACKING COOLING INJECTION REQ'D: ☐ TOTAL GPM ☐ PSIG
○ SEAL FLUSH PIPE PLAN ○ C.S. ○ S.S. ○ TUBING ○ PIPE
○ EXTERNAL SEAL FLUSH FLUID ☐ GPM ☐ PSIG
○ AUXILIARY SEAL PLAN ○ C.S. ○ S.S. ○ TUBING ○ PIPE
○ AUX. SEAL QUENCH FLUID

VERTICAL PUMPS

PIT OR SUMP DEPTH ○
MIN. SUBMERGENCE REQ'D ☐
COLUMN PIPE: ☐ FLANGED ☐ THREADED
LINE SHAFT ☐ OPEN ☐ ENCLOSED
BRGS: ☐ BOWL ☐ LINE SHAFT
BRG LUBE ☐ WATER ☐ OIL ☐ GREASE
FLOAT & ROD ○ C.S. ○ S.S. ○ BRZ ○ NONE
FLOAT SWITCH ☐
PUMP THRUST, LB ☐ UP ☐ DOWN

MOTOR DRIVER

HP RPM FRAME VOLTS/PHASE/CYCLES
MFR BEARINGS LUBE
TYPE INSUL FULL LOAD AMPS
ENC TEMP RISE, C LOCKED ROTOR AMPS
○ VHS ○ VSS VERT. THRUST CAP., LB SERVICE FACTOR

APPROX. WT. PUMP & BASE
MOTOR TURBINE

API STANDARD 610 GOVERNS UNLESS OTHERWISE NOTED. (1) EXISTING PUMP - INSTALLED NEW TURBINE DRIVER.

FORM NO 130 (REVISED APRIL 71)

NO.	DATE		JOB NO.	DRAWING NO.	REV.
0	1-22-74	ISSUED FOR CONST.	10095	DS-3-G-3	0
			SHEET 1 OF 1		

BECHTEL

WA-TEX 000929

BYRON JACKSON

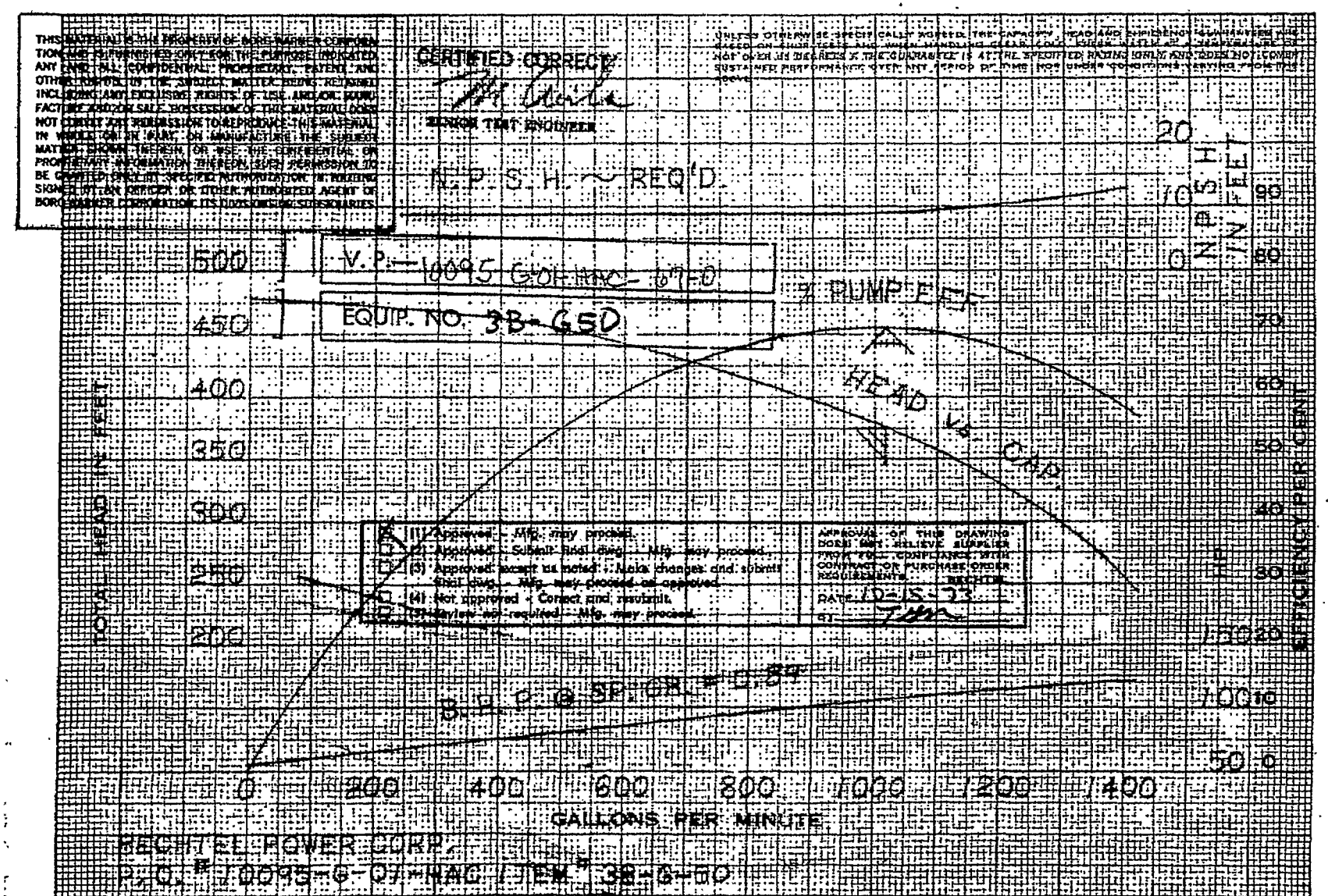

PUMP SIZE AND TYPE	RPM	ASSEMBLY NO.	IMPELLER NO.	DIA	UNDER / OVER	FILED TO	BYRON JACKSON TEST.
4 x 6 x 13¼ H DSJ	3550	731-H-0012	R-3941	10 9/16			T-33928-1
		FACTORY NO.	DATE	DATA BY		DRAWN BY	
			9-10-73	F.J. & S.J.		F.J.	

WA-TEX 000930

BYRON JACKSON

THIS MATERIAL IS THE PROPERTY OF BORG-WARNER CORPORATION AND IS FURNISHED ONLY FOR THE PURPOSE INDICATED. ANY AND ALL CONFIDENTIAL, PROPRIETARY, PATENT AND OTHER RIGHTS IN THE SUBJECT MATTER HEREOF RETAINED INCLUDING ANY EXCLUSIVE RIGHTS OF USE AND OR MANUFACTURE AND OR SALE. POSSESSION OF THIS MATERIAL DOES NOT CONFER ANY PERMISSION TO REPRODUCE THIS MATERIAL IN WHOLE OR IN PART, OR TO MANUFACTURE THE SUBJECT MATTER SHOWN THEREIN OR USE THE CONFIDENTIAL OR PROPRIETARY INFORMATION THEREIN. SUCH PERMISSION TO BE GRANTED ONLY IN SPECIFIC INSTANCES IN WRITING SIGNED BY AN OFFICER OR OTHER AUTHORIZED AGENT OF BORG-WARNER CORPORATION, ITS DIVISIONS OR SUBSIDIARIES.

CERTIFIED CORRECT

SIGNATURE OF AUTHORIZED INSPECTOR

UNLESS OTHERWISE SPECIFICALLY AGREED, THE CAPACITY, HEAD AND EFFICIENCY GUARANTEES ARE BASED ON CLEAR, COLD WATER HANDLED AT THE RATING SHOWN AT SEA LEVEL. NOT EVEN $1\frac{1}{2}$% OF PRICE. THE GUARANTEES ARE AT THE SPECIFIC CONDITIONS ONLY AND DO NOT APPLY TO SUBMERGED PERFORMANCE OVER ANY PERIOD OF TIME. NON-WITHDRAWABLE PARTS ARE

N.P.S.H.R. REQ'D.

V.P. - 10095-G-01-HAC - 09-0

EQUIP. NO. 3B-G50A

% PUMP EFF

HEAD

TOTAL HEAD IN FEET

500 450 400 350 300 250 200

0 100 200 300 400 500 600 700 800 900 1000 1100 1200 1300 1400

GALLONS PER MINUTE

(1) Approved – Mfg. may proceed.
(2) Approved – Submit final dwg. – Mfg. may proceed.
(3) Approved except as noted – Make changes and submit final dwg. – Mfg. may proceed as approved.
(4) Not approved – Correct and resubmit.
Resubmittal not required – Mfg. may proceed.

APPROVAL OF THIS DRAWING DOES NOT RELIEVE SUPPLIER FROM FULL COMPLIANCE WITH CONTRACT OR PURCHASE ORDER REQUIREMENTS. BECHTEL

DATE 10-15-73

BY

B.E.P. @ SP. GR. = 1.0

BECHTEL POWER CORP.
P.O. # 10095-G-01-HAC ITEM # 3B-G-50A

PUMP SIZE AND TYPE	RPM	ASSEMBLY NO	IMPELLER NO	DIA	UNDER OVER	FILED TO	BYRON JACKSON TEST
4x6x13¼ H DSJ	3550		R-3711	10 9/16			T-33904-1
		FACTORY NO 231-H-0013	DATE 9-18-73	DATA BY F.J. & S.J.		DRAWN BY F.J.	

WA-TEX 000931

7.6 INSTRUMENTS

TABLE OF CONTENTS

SECTION 7.6 INSTRUMENT DATA

Summary Sheet - Relief Valves	Table 7.6-1
Summary Sheet - Restriction Orifice	Table 7.6-2
Summary Sheet - Flow Element	Table 7.6-3
Summary Sheet - Alarm & Shutdown Setting	Table 7.6-4
Control Valve Data Sheets	

TABLE 7.6-1
RELIEF VALVE SUMMARY SHEET
PLANT 3B FCC UNIT
ANACORTES, WASHINGTON

Tag No.	Service	Size	Set Press
3PSV-127A	3B-F3	6" x 8"	114 PSIG
3PSV-127B	"	"	"
3PSV-630	3B-GT3	3" x 4"	300 PSIG
3PSV-634	3B-GT2	1-1/2" x 2-1/2"	65 PSIG

TABLE 7.6-2
RESTRICTION ORIFICE SUMMARY SHEET
PLANT 38 FCC Unit
ANACORTES, WASHINGTON

Tag No.	Service	Location	Line Size	Orifice Size	Flow Rate
3FO-608	Lt. Cycle Oil	3B-0-218	2"	0.433	-
3FO-610	Flushing Oil	4B-0-372	2"	0.433	-
3FO-611	Fuel Oil	3B-0-228	1-1/2"	0.234	14 GPM

TABLE 7.6-3
FLOW ELEMENT SUMMARY SHEET
PLANT 3B FCC UNIT
ANACORTES, WASHINGTON

Flow Element No.	Service	Orifice Size	Line Size	Meter Coefficient
3FE-600	3B-F3 Feed	6.773	10" Sch 40	300 BPH
3FE-601	" "	2.489	4" Sch 80	40 BPH
3FE-602	" "	"	"	"
3FE-603	" "	"	"	"
3FE-604	" "	"	"	"
3FE-607	Fuel Gas to 3B-F3	3.681	6" Sch 40	20000 SCFH
3FE-620	3B-F3 Feed	2.489	4" Sch 80	40 BPH
3FE-621	" "	"	"	"

TABLE 7.6-4

ALARM AND SHUTDOWN SETTINGS

PLANT 3B FCC UNIT

ANACORTES, WASHINGTON

Alarm No.	Switch No.	Service	Switch Location	Switch Function	Switch Activates at	Switch Actuated by:	Switch Set Point	Remarks
3TAH-300	3TSH-300	3B-F3 Heater	IN TR-300	High Temp.		Mechanical		In Bristol Recorder
3TAL-302	3TSL-302	3B-F3 Outlet	Main Panel	Low Temp.	5.4 PSIG	Inst. Air	5.4 PSIG	
3TAH-304	3TSH-304	3B-E40 Outlet	Main Panel	High Temp.		Thermocouple	750°F	
3TAH-305	3TSH-305	3B-F3 Stack	Main Panel	High Temp.		Thermocouple	750°F	
3PALL-600	3PSLL-600	3B-F3 F.O. HDR.	Main Panel	Low Pressure	5.4 PSIG	Inst. Air	5.4 PSIG	
3HA-601	3HS-601	3B-F3 Heater	Main Panel	Shutdown Alarm		P/B		
3PAL-602	3PSL-602	3B-F3 Fuel Oil	Main Panel	Shutdown Alarm	5.4 PSIG	Inst. Air	5.4 PSIG	
3FAL-606	3FSL-606	3B-F3 Feed	Main Panel	Low Flow		Inst. Air		
3FALL-606	3FSLL-606	3B-F3 Feed	Main Panel	Shutdown Alarm		Inst. Air		
3PAL-607	3PSL-607	3B-F3 Fuel Gas	Main Panel	Low Press	5.4 PSIG	Inst. Air	5.4 PSIG	
3FALL-622	3FY-622	3B-FB Heater	Main Panel	Shutdown Alarm		Relay Cont.		
3FAL-624	3FSL-620	3B-F3-Pass #1	Main Panel	Low Flow	5.4 PSIG	Inst. Air	5.4 PSIG	
3FAL-624	3FSL-621	3B-F3-Pass #2	Main Panel	Low Flow	5.4 PSIG	Inst. Air	5.4 PSIG	
3FAL-624	3FSL-601	3B-F3-Pass #3	Main Panel	Low Flow	5.4 PSIG	Inst. Air	5.4 PSIG	
3FAL-624	3FSL-602	3B-F3-Pass #4	Main Panel	Low Flow	5.4 PSIG	Inst. Air	5.4 PSIG	
3FAL-624	3FSL-603	3B-F3-Pass #5	Main Panel	Low Flow	5.4 PSIG	Inst. Air	5.4 PSIG	
3FAL-624	3FSL-604	3B-F3-Pass #6	Main Panel	Low Flow	5.4 PSIG	Inst. Air	5.4 PSIG	
3PAL-641	3PSL-641	3B-F3 Fuel Gas	Main Panel	Low Press	5.4 PSIG	Inst. Air	5.4 PSIG	
3PAL-679	3PSL-679	Soot Blower Purge	Main Panel	Low Press		Inst. Air		

FORM NO. J-G50 (8/68)

SERVICE CONDITIONS	FLUID											
	INLET PSIG	MIN.	OPER.	MAX.		100						200
	OUTLET PSIG	MIN.	OPER.	MAX.		75						90
	INLET TEMP. °F		OPER.	MAX.	521						280	
	OPER. SP. GR.	USE Vapor MOL. WT.			0.735	–					0.92	
	Tsh °F or % FLASH	OPER. VISC.-C.P.				.54						6 CP
	CRIT. PRESS. Pc	VAPOR PRESS. Pv										
	OPER. FLOW	SIZING FLOW			215	300					13	18
	MIN. FLOW	MAX. FLOW										
	FLOW UNITS	ΔP SIZING			GPM	25					GPM	110
	ΔP SHUT OFF	ΔP MIN.			150						300	
	Cv @ SIZING ΔP & FLOW	MIN. Cv			52						1.64	
	Cv-VALVE SELECTED	FACTORS			12.9						3.22	
					KM = .59						KM = .70	
VALVE BODY	SIZE	TYPE			2"	GLOBE					1"	GLOBE
	PRESS. RATING	CONNECTIONS			300#	RF						
	MATERIAL	CLASS			C.S.							
	BONNET TYPE	BOLTS			EXT	STD					PLAIN	STD.
	PACKING	TYPE	MAT'L		TEFLON ASBESTOS							
	LUBRICATOR	ISOL. VALVE			YES	YES						
TRIM	PORT SIZE	NO. OF PORTS			FULL	BAL'D					3/8"	1
	CHARACTER.	PLUG TYPE			LIN.	CAGE					= %	M. FORM CAGE
	GUIDE TYPE	TRIM SPEC.				A						
	ACTION PUSH TO OPEN-CLOSE	FLOW: OPENS-CLOSES			CLOSE	CLOSE					CLOSE	OPEN
ACTUATOR	ACTUATOR TYPE				DIAP.							
	MOTIVE POWER	LINEAR / ROTARY			AIR	LIN.						
	PRESS./VOLTAGE	POS. ON POWER FAIL			–	D					–	C
	THRUST OR TORQUE REQ.	SHUT OFF	OPER.									
	SIZE	MAX. OUTPUT			40						30	
	MANUAL O'RIDE	POS. FEEDBACK TYPE			–	–						
	POSITIONER OUTPUT	SINGLE/DUAL			3-15	S					–	–
	INPUT SIGNAL	SUPPLY PSIG			3-15	20					3-15	–
	BY-PASS	GAUGES			YES	YES					–	–
MISC.												
	AIRSET MTD & PIPED				YES						–	
PURCH.	M. R. / P. O. NUMBER				J-411							
	MANUFACTURER				FISHER							
	MODEL NO.				657 ED						667 ES	
GENERAL	P. & I. D. NUMBER				3-RA-41						3-RA-41	
	SERVICE				REACTOR FEED TO F3						FUEL OIL TO 3B-F3	
	LINE SIZE - NO. - SPEC.				4" J117A		4" J117A		4" J117A		4" J117A	2" J13A
	INSTRUMENT TAG NO.				3FV-601		3FV-602		3FV-603		3FV-604	3FV-606

NO.	DATE	REVISIONS			NOTES
1	3-7-73	GEN. REVISION	JT		
0	1-31-73	ISSUED FOR PURCHASE	JT		

ORIGIN R&C ENG.	BECHTEL	CONTROL VALVES	JOB NO. 10095	
		TEXACO EST 3910 PUGET SOUND PLANT BECHTEL 10053	DATA SHEET NUMBER DS-J-126	REV. 1

This drawing and the design it covers are the property of BECHTEL. [illegible] loaned and on the borrower's express agreement that they will not be reproduced, copied, loaned, exhibited, or used except in the limited way [illegible] private use permitted by any written consent given by the lender to the borrower.

FORM NO. J-G50 (8/68)

WA-TEX 000938

FORM NO. J-060 (8/89)

SERVICE CONDITIONS	FLUID																								
	INLET PSIG	MIN.	OPER.	MAX.		250			30			60													
	OUTLET PSIG	MIN.	OPER.	MAX.		217			8			15													
	INLET TEMP. °F		OPER.	MAX.	500			70			70														
	OPER. SP. GR.	Gas/Vapor MOL. WT.			—	13		1.0			8.3	24.1													
	Tsh °F or % FLASH	OPER. VISC.-C.P.			94°F																				
	CRIT. PRESS. Pc	VAPOR PRESS.-Pv																							
	OPER. FLOW	SIZING FLOW			7450	10400		3/4000			108M	151M													
	MIN. FLOW	MAX. FLOW																							
	FLOW UNITS	ΔP SIZING			LB/HR	3		GPM	32		SCFH	4h													
	ΔP SHUT OFF	ΔP MIN.			350	Cs:41		60			75														
	Cv @ SIZING ΔP & FLOW	MIN. Cv			Cs=200			767			1920														
	Cv-VALVE SELECTED	FACTORS			Cs=55			843			1960														
					C1=30.4			KM=.85			C1=34.4														
	NOISE - DBA				64.6			—			87														
VALVE BODY	SIZE	TYPE			3"	GLOBE		3"	GLOBE		2"	GLOBE		3"	BALL		2"	BALL							
	PRESS. RATING	CONNECTIONS			300#	RF																			
	MATERIAL	CLASS			C.S.																				
	BONNET TYPE	BOLTS			EXT	STD		A.A.U.	STD.																
	PACKING	TYPE	MAT'L		TEFLON ASBESTOS			TEFLON ASBESTOS																	
	LUBRICATOR	ISOL. VALVE			YES	YES																			
TRIM	PORT SIZE	NO. OF PORTS			FULL	1		FULL	1					FULL	1										
	CHARACTER.	PLUG TYPE			E.S.	CAGE		LIN	T.P.		MOD PAR	CONT			BALL										
	GUIDE TYPE	TRIM SPEC.				A			C																
	ACTION PUSH TO OPEN-CLOSE	FLOW: OPENS-CLOSES			CLOSE	OPEN																			
ACTUATOR	ACTUATOR TYPE				SOL.						DIAP.														
	MOTIVE POWER	LINEAR / ROTARY			AIR	LIN.																			
	PRESS./VOLTAGE	POS. ON POWER FAIL			—	O					—	C													
	THRUST OR TORQUE REQ.	SHUT OFF	OPER.																						
	SIZE	MAX. OUTPUT			40			60			40														
	MANUAL O'RIDE	POS. FEEDBACK TYPE			—	—																			
	POSITIONER OUTPUT	SINGLE/DUAL			—	—					3-15	S		—	—										
	INPUT SIGNAL	SUPPLY PSIG			ON-OFF	60					3-15	20		ON-OFF	60										
	BY-PASS	GAUGES			—	—																			
MISC.					SIDE MOUNT									FISHER 657											
					HANDWHEEL									ACTUATOR											
	BURSET MTG & PIPED				—						YES			—											
PURCH.	M. R. / P. O. NUMBER				J-811																				
	MANUFACTURER				FISHER									MILLS-McCANNA											
	MODEL NO.				471-5-GU-ES			657 A			667 A			SSN-SS-D-SS											
GENERAL	P. & I. D. NUMBER				3-FA-41			3-FA-41			3-FA-41			3-FA-41										
	SERVICE				STM TO TURB 38-650A			COOLING H2O TO 38-840			FUEL GAS TO 38-F3			FUEL GAS SHUT OFF										
	LINE SIZE - NO. - SPEC.				3" J34			10" J03B			6" J16			6" J16			2" J13A							
	INSTRUMENT TAG NO.				32V-643			3PSCL-14VM			3PV-641			3HV-607			3HV-604							

NO.	DATE	REVISIONS		NOTES
1	3-7-75	GEN REVISION	JT	
0	1-31-75	ISSUED FOR PURCHASE	JT JM	

ORIGIN R&C ENG.

BECHTEL

CONTROL VALVES

JOB NO. 10095

DATA SHEET NUMBER DS-J-127 REV. 1

FOR J-060 (8/89)

This drawing and the design it covers are the property of BECHTEL. It is loaned and on the borrower's express agreement that they will not be reproduced, copied, loaned, exhibited, or used except in the limited way permitted by any written consent given by the lender to the borrower.

WA-TEX 000939

FORM NO. J-GbJ (8/84)

SERVICE CONDITIONS	FLUID							STEAM								
	INLET PSIG	MIN.	OPER.	MAX.				40		250			100			
	OUTLET PSIG	MIN.	OPER.	MAX.				36					75			
	INLET TEMP. °F		OPER.	MAX.			150		500			521				
	OPER. SP. GR. (AIR=1) / Vapor MOL. WT.						0.65			18		0.735	—			
	Teh °F or % FLASH		OPER. VISC.-C.P.													
	CRIT. PRESS. Pc		VAPOR PRESS.-Pv													
	OPER. FLOW		SIZING FLOW				1490	2086	8000	11200		715	300			
	MIN. FLOW		MAX. FLOW													
	FLOW UNITS		ΔP SIZING				—	4	#/HR	70		GPM	25			
	ΔP SHUT OFF		Δ P MIN.									150				
	Cv @ SIZING Δ P & FLOW		MIN. Cv				840		67.5			52				
	Cv-VALVE SELECTED		FACTORS				843		62.5			72.9				
							Km=.75					Km=.58				
									C_1=32							
VALVE BODY	SIZE		TYPE		8"	GLOBE	8"	GLOBE	1½	GLOBE		2"	GLOBE			
	PRESS. RATING		CONNECTIONS		300#	RF						300#	RF			
	MATERIAL		CLASS				S.S.-R	C.S	C.S			C.S.				
	BONNET TYPE		BOLTS				EXT	STD				EXT	STD.			
	PACKING	TYPE	MAT'L				TEFLON					TEFLON ASBESTOS				
	LUBRICATOR		ISOL. VALVE				YES	YES				YES	YES			
TRIM	PORT SIZE		NO. OF PORTS				FULL	2				RED	BALD			
	CHARACTER.		PLUG TYPE				LIN	T.P.	Q.O.	CAGE		LIN	CAGE			
	GUIDE TYPE		TRIM SPEC.					E		A			A			
	ACTION PUSH TO OPEN-CLOSE		FLOW: OPENS-CLOSES				CLOSE	OPEN	CLOSE	OPEN		CLOSE	CLOSE			
ACTUATOR	ACTUATOR TYPE						P.O.P.		DIAP.							
	MOTIVE POWER		LINEAR / ROTARY				A-IR	LIN								
	PRESS./VOLTAGE		POS. ON POWER FAIL		—	C			—	C		—	O			
	THRUST OR TORQUE REQ.		SHUT OFF	OPER.												
	SIZE		MAX. OUTPUT				86		40			40				
	MANUAL O'RIDE		POS. FEEDBACK TYPE				—	—	—	—		—	—			
	POSITIONER OUTPUT		SINGLE/DUAL				3-15	S	—	—		3-15	S			
	INPUT SIGNAL		SUPPLY PSIG				3-15	20	IN-OFF	60		3-15	20			
	BY-PASS		GAUGES				YES	YES	NO	NO		YES	YES			
MISC.					REUSE EXISTING VALVE ON P.I.C.											
	AIRSET MTD & PIPED				3-FA-4, NEW		YES		YES			YES				
PURCH.	M. R. / P. O. NUMBER				SAME AS SAME		J-411		J-411			J-411				
	MANUFACTURER				TAG NO.		FISHER		FISHER			FISHER				
	MODEL NO.				—		476D-A		657 ED			657 ED		657 ED		
GENERAL	P. & I. D. NUMBER				2-RA-41		3-FA-4		3-RA-41			2-RA-41				
	SERVICE				REACTOR FEED TO 3R-E-46		FEED TO RX RISER		STM TO SOOT BLOWER			REACTOR FEED TO E-3				
	LINE SIZE - NO. - SPEC.				10" J14B		10" J113A		2"-J34			4" J117A		4" J117A		
INSTRUMENT TAG NO.					3PICL-14VB		3PICL-14VN		3PV-658			3FV-620		3FV-621		
2	10-24-73	REVISED 3PICL-14VN					JTL									
1	9-7-73	GOLL REVISION					JTL									
0	7-31-73	ISSUED FOR PURCHASE					J.T.A.									
NO.	DATE	REVISIONS							NOTES							

ORIGIN R&C ENG.

BECHTEL

CONTROL VALVES

JOB NO. 10095

DATA SHEET NUMBER 05-J-128 REV. 2

IDACO EC[illegible] 3410 [illegible] PLANT 10095

This drawing and the design it covers are the property of BECHTEL. It is loaned and on the borrower's express agreement that they will not be reproduced, copied, loaned, exhibited, or used except in the limited way and private use permitted by any written consent given by the lender to the borrower.

FORM NO. J-050 (8/84)

WA-TEX 000940