PLAINTIFF'S EXHIBIT

USG-2011

11a
10

TECHNICAL INFORMATION

# ACOUSTONE

T. M. REG. U. S. PAT. OFF.

# & AUDITONE

T. M. REG. U. S. PAT. OFF.

## ACOUSTICAL TILES




BB007 0410

UNITED STATES GYPSUM

## United States Gypsum

**For Building • For Industry**

Gypsum • Lime • Steel • Insulation • Roofing • Paint

UNITED STATES GYPSUM

**GENERAL OFFICES—300 WEST ADAMS STREET, CHICAGO 6, ILLINOIS**

ALBANY, N. Y.
ATLANTA, GA.
BALTIMORE, MD.
BIRMINGHAM, ALA.
BOSTON, MASS.
BUFFALO, N. Y.
CHARLOTTE, N. C.
CHICAGO, ILL.
CINCINNATI, O.
CLEVELAND, O.
DALLAS, TEX.
DENVER, COLO.
DETROIT, MICH.
GRAND RAPIDS, MICH.
HARRISBURG, PA.
HOUSTON, TEX.
INDIANAPOLIS, IND.
JACKSONVILLE, FLA.
KANSAS CITY, MO.
LOS ANGELES, CALIF.
MILWAUKEE, WIS.
MINNEAPOLIS, MINN.
NEWARK, N. J.
NEW HAVEN, CONN.
NEW YORK, N. Y.
OKLAHOMA CITY, OKLA.
OMAHA, NEBR.
PHILADELPHIA, PA.
PHOENIX, ARIZ.
PITTSBURGH, PA.
PORTLAND, ORE.
PROVIDENCE, R. I.
RICHMOND, VA.
ST. LOUIS, MO.
SACRAMENTO, CALIF.
SALT LAKE CITY, UTAH
SAN FRANCISCO, CALIF.
SEATTLE, WASH.
SYRACUSE, N. Y.
WASHINGTON, D. C.

# CONTENTS


## ACOUSTONE "F", Acoustical Tile

*Page*

Description and Appearance . . . . . 3
Function & Utility . . . . . 3
Limitations of Use . . . . . 3
Design Data . . . . . 5
Technical Data . . . . . 5
Installation Methods . . . . . 6-7
Specifications . . . . . 7
Details . . . . . 8-11

## MOTIF'D ACOUSTONE, Acoustical Tile

Description and Appearance . . . . . 12
Function & Utility . . . . . 12
Specifications . . . . . 12

## AUDITONE, Acoustical Tile

Description and Appearance . . . . . 13
Function & Utility . . . . . 13
Technical Data . . . . . 13
Installation Methods . . . . . 14
Specifications . . . . . 14
Details . . . . . 15

## PERFATONE, Acoustical Units

Description . . . . . 17
Function and Utility . . . . . 17
Specifications . . . . . 17
Details . . . . . 16

## AUTHORIZED APPLICATORS . . . . . 20



"ACOUSTONE", "AUDITONE", "MOTIF'D", "TEXOLITE", "USG", "RED TOP", "ROCKLATH", "SHEETROCK", and "PERFATONE" mentioned in this publication are registered trademarks owned by United States Gypsum, and are used by it to distinguish its products.

"ACOUSTONE" as used herein identifies the particular mineral acoustical tile;
"AUDITONE" as used herein identifies the particular wood fiber acoustical tile;
"MOTIF'D" as used herein identifies the particular mineral acoustical tile with decorated surface;
"TEXOLITE" as used herein identifies the particular paint;
"USG" as used herein identifies the particular sheathing and sound insulation;
"RED TOP" as used herein identifies the particular plaster;
"SHEETROCK" as used herein identifies the particular gypsum wallboard;
"ROCKLATH" as used herein identifies the particular gypsum lath or plaster base;
"PERFATONE" as used herein identifies the particular perforated metal acoustical tile;
"SABINITE" as used herein identifies the particular acoustical plaster;
all manufactured only by United States Gypsum.



BB007 0411

# ACOUSTONE* "F" ACOUSTICAL TILE

## DESCRIPTION

ACOUSTONE "F" mineral acoustical tile is manufactured by binding mineral fibers into a light-weight, highly sound-absorbent tile form. The fissured surface closely resembles that of Travertine marble. No two tiles are identical in texture; the pattern is as natural as the veining of fine marble or the grain of wood. Each tile is finish-painted at the factory and is available with accurately formed bevel or square edges. For sizes, etc., see Technical Data Page 5.

## FUNCTION AND UTILITY

ACOUSTONE "F" combines high sound absorption with incombustibility in a product of decorative versatility that fits into the architectural scheme as an inconspicuous surface or as the dominant note in the decoration.

### *High Sound Absorption*

Made in two thicknesses, ACOUSTONE "F" provides Noise Reduction Coefficients of .65 and .70. For auditorium use, the absorption at 512 cycles per second is .76 and .85. In both thicknesses the absorption for the higher pitched sounds, which are considered most annoying, is maintained at a high level to produce more effectiveness. (See Technical Data Page 5.)

### *Fire Resistance*

ACOUSTONE "F" serves to retard the spread of fire. It is rated as *incombustible* by the National Bureau of Standards.

### *Splined for Good Alignment*

All square edge ACOUSTONE "F" (no bevel) is kerfed for splines and "back-cut" on all edges to provide tight, inconspicuous joints (see page 4). The surfaces of adjacent tile are held level by the splines and accurate kerfing. The "back-cut" assures closed joints on wavy ceilings. Butted conventional square edge joints that are 1-32" to 1-16" out of level cause conspicuous shadows which are exaggerated when lighting fixtures are close to the ceiling line. Concealed splines and "back-cut" minimize this "out-of-level" appearance.

### *Colors*

ACOUSTONE "F" is painted at the factory with a full finish coat of a high grade resin emulsion paint (IMPERIAL TEXOLITE*) on the face and exposed bevels in white or ivory; other standard colors shown on the current USG TEXOLITE color selector are obtainable on special order.

### *Texture*

ACOUSTONE "F" is furnished in one texture range only. (See page 15, for special texture on MOTIF'D* ACOUSTONE "F".)

### *Weight*

From years of experience we recommend that acoustical tile cemented on ceilings should weigh no more than 1.75 lbs. per square foot. ACOUSTONE "F" weights do not exceed this. (See Technical Data Page 5.)

### *Washability*

Factory-painted ACOUSTONE "F" may be washed with water and a sponge or cleaned with putty or paste type wallpaper cleaner. Accidental spotting or soiling can usually be removed by this method before over-all redecoration is necessary.

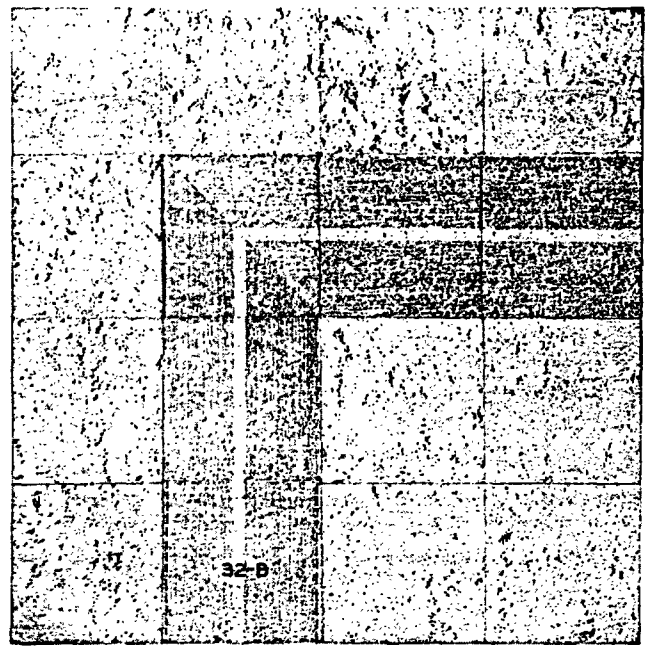


**Standard Square Edge ACOUSTONE "F" with MOTIF'D Border**

### *Resistance to Soiling and "Breathing"*

The smooth, hard, painted finish of ACOUSTONE "F" resists soiling and minimizes objectionable air travel through the tile proper.

### *Paintability*

Authoritative tests show that ACOUSTONE "F" may be brush or spray painted many times without loss of sound absorption at *512 cycles* per second or in the *Noise Reduction Coefficient*. The effect of repeated coats of paint on ACOUSTONE "F" and other materials may be found in Research Paper RP-1298 "Effect of Paint on Sound Absorption of Acoustical Materials," which is obtainable from National Bureau of Standards, U. S. Department of Commerce, Washington, D. C. Oil, casein, resin emulsion or calcimine types of paint may be used according to normal paint procedures for interior pre-decorated surfaces.

### *High Light Reflection*

ACOUSTONE "F" in standard white finish has a light reflection of 80%; standard ivory, 72%.

### *Rodent and Vermin Resistance*

ACOUSTONE "F", essentially of mineral composition, is highly resistant to rodents and vermin.

### *Heat Conductivity*

The low thermal conductivity of ACOUSTONE ("k" factor = .35) adds heat insulation to top floor ceilings and exterior walls.

## LIMITATIONS OF USE

ACOUSTONE "F" mineral acoustical tile is designed for normal moisture conditions. It is not recommended in dishwashing rooms or where it will be exposed to steam or constant high humidity.

It should not be used below wainscot height or where it will be subjected to severe impact or abrasion.

BB007 0412



*Trademarks Reg. U. S. Pat. Off.

# ACOUSTONE "F"

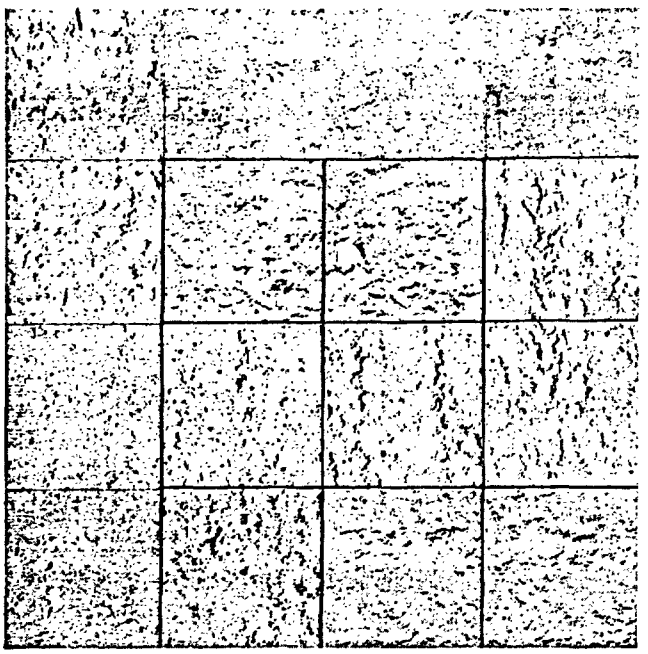

Bevel ACOUSTONE "F"—Conventional joints

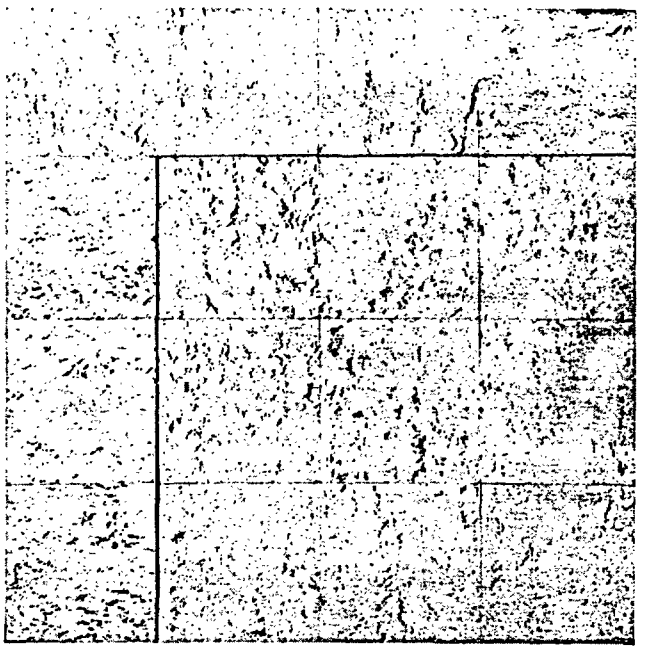

Square Edge ACOUSTONE "F"—inconspicuous joints

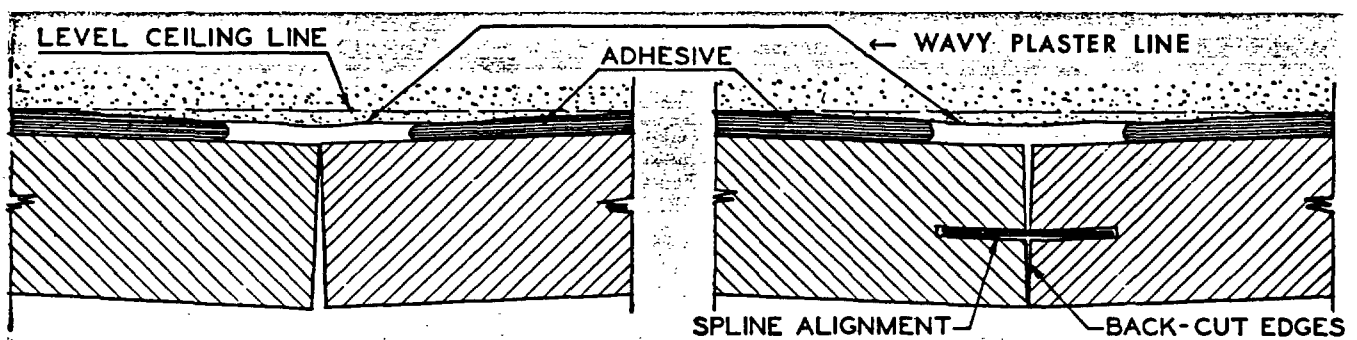


OLD TYPE SQUARE EDGE

PRODUCES OPEN AND OFFSET JOINTS OVER A WAVY CEILING.

NEW TYPE SQUARE EDGE

PRODUCES TIGHTER JOINTS IN CLOSER ALIGNMENT.

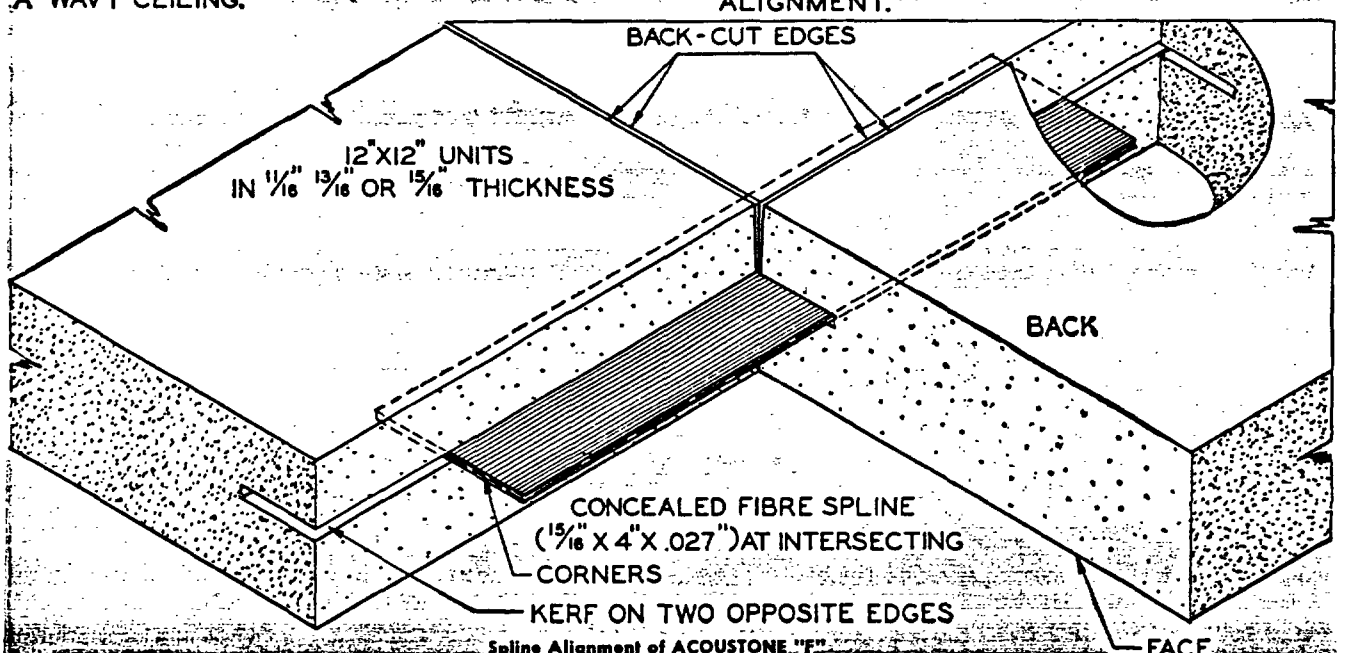


Spline Alignment of ACOUSTONE "F"



BB007 0413

# ACOUSTONE "F"

## TECHNICAL DATA

### SOUND ABSORPTION COEFFICIENTS

**Acoustical Materials Association**

| Mounting | Thickness | Coefficients 128 | 256 | 512 | 1024 | 2048 | 4096 | Noise Red. Coef. | Wt. (lbs.) per Sq. Ft. |
|---|---|---|---|---|---|---|---|---|---|
| 1 | 11/16" | .08 | .25 | .76 | .84 | .78 | .73 | .65 | 1.35 |
| 1 | 13/16" | .12 | .31 | .85 | .88 | .75 | .75 | .70 | 1.53 |
| 2 | 13/16" | .23 | .50 | .72 | .77 | .74 | .69 | .70 | 1.54 |
| 7 | ⅞" | .38 | .60 | .64 | .74 | .78 | .74 | .70 | 1.68 |

Tile tested were painted with a full finish coat of paint.

**Bureau of Standards (LC-714 Jan. 1943)**
**Federal Specifications are Based on Bureau of Standards Tests**

| Mounting | Thickness | Coefficients 128 | 256 | 512 | 1024 | 2048 | 4096 | Noise Red. Coef. | Wt. (lbs.) per Sq. Ft. | (SS-A-118a) Feb. 12, 1948 512 Cycles | N. R. | Type |
|---|---|---|---|---|---|---|---|---|---|---|---|---|
| 1 | 11/16" | .07 | .22 | .75 | .92 | .82 | .81 | .70 | 1.19 | 104 | 5 | III |
| 1 | 13/16" | .14 | .31 | .86 | .87 | .78 | .77 | .70 | 1.33 | 102 | 5 | III |
| 8 | 13/16" | .34 | .75 | .71 | .72 | .79 | .77 | .75 | 1.31 | 105 | 4 | III |

Tile tested were painted with a full finish coat of paint.

Mounting No. 1—Cemented to plasterboard—considered equivalent to cementing to plaster or concrete ceilings.
Mounting No. 2—Nailed to 1" x 2" wood strips 12" O. C.
Mountings Nos. 7 and 8—attached to metal supports on metal Suspension system.

**Light Reflection:**
ACOUSTONE "F" White (1) 80%
ACOUSTONE "F" Ivory (1) 72%
MOTIF'D ACOUSTONE White 78%
(1) Tests by Official A.M.A. Laboratory.

**Heat Conductivity**—k = .35

**Fire Resistance**—Incombustible.
Authority: Bureau of Standards (LC-715, January, 1943).

## DESIGN DATA

| THICKNESS | SIZES | EDGE | INSTALLATION, KERFING, BACK-CUT, AND CENTERSCORING |
|---|---|---|---|
| 11/16" | 6"x 6"<br>6"x12"<br>12"x12"<br>12"x24" | Bevel or Square | Installation: *Adhesive only recommended.* Square edge units in 6" x 12", 12" x 12", and 12" x 24" kerfed (for .027" thick, 15/16" wide by 4" long splines) and back-cut. No kerfing or back-cut on 6" x 6" size or on bevelled units. No kerfing for mechanical erection. No centerscoring. |
| 13/16" | 6"x 6"<br>6"x12"<br>12"x12"<br>12"x24" | Bevel or Square | Installation: *Adhesive, Mechanical Erection or nailed direct to wood strips.*<br>1. *Adhesive Application:* Square edge units in 6" x 12", 12" x 12" and 12" x 24" kerfed (for .027" thick, 15/16" wide by 4" long splines) and back-cut. No kerfing or back-cut on 6"x6" size or on bevelled units. No centerscoring.<br>2. *Nailing to Wood Strips* (no adhesive used)—Only bevelled units (12" x 12" and 12" x 24"). Centerscoring available on 12" x 24" when specified. Units kerfed for .027" thick, 15/16" wide by 4" long splines. |
| 7/8" | 12"x24" | Bevel | 3. *Mechanical Erection:*<br>"*Zee-Spline Method*"—Bevelled or square edge units (12" x 24"). Centerscoring available when specified. Units kerfed and rabbeted.<br>"*Clip-Spline Method*"—Only bevelled units (12" x 24"). Centerscoring available when specified. Units kerfed and rabbeted. |

NOTE: All units that are to be applied with adhesives can be furnished upon request with bevels on one or more edges, the remaining edges left square. This allows creation of special patterns and border effects.

BB007 0414

# ACOUSTONE "F"

## INSTALLATION METHODS

ACOUSTONE "F" mineral acoustical tile is installed by *approved USG acoustical contractors* by one of three methods:

I. Application with adhesive. (With or without nailing).

II. Nailing directly to wood strips through concealed fiber splines. (No adhesive).

III. Mechanical methods.

Each of these methods has individual advantages which fit it for specific types of construction.

### I. ADHESIVE APPLICATION (All thicknesses)

Application with adhesive is the most widely used method and is recommended where a suitable base exists.

**Adhesive**

See Architectural Specifications page 7 for description and amount of adhesive recommended.

**Size of Units**

Should not exceed 12" x 12" for ceilings or 12" x 24" for walls.

### *BASES FOR ADHESIVE APPLICATION OF ACOUSTONE*

**1. New Plaster.** A full thickness of rodded brown coat gypsum plaster in a clean, dry, level state provides an excellent base.

**2. New Lime Putty Finish.** Since the presence of free lime in a new finish may cause saponification of oils and resins in the adhesive, a combination of adhesive and nailing is recommended.

**3. Old Lime Putty Finish.** An old lime putty finish (in place over one year) offers a good base if the finish is well bonded to the base coat of plaster. Loose areas should be scaled off and patched with RED TOP* Patching Plaster.

**4. Painted Plaster.** A good quality of oil paint well bonded to the plaster and in place not less than 6 months will generally give excellent results. Oil in paints will oxidize sufficiently in 6 months so that it will not be objectionably softened by the naphtha thinner in adhesives. Units can also be successfully cemented directly to resin emulsion, casein or calcimine painted surfaces if they are well bonded to the base. Calcimine over a good varnish size or paint will generally give good results.

*CAUTION:* Calcimine over hard oil (sometimes called gloss oil) size is an unsatisfactory base. In this case a combination of nailing and adhesives must be used. The acoustical contractor will know by job testing when to augment the adhesive with nailing.

**5. Undecorated Concrete.** The concrete slab should be dry, clean and free of any sharp vertical offsets of more than 1/8" (caused by forms out of level). Where concrete slabs have localized areas containing a surface film of loose cement dust, a proper size (spray or brush application) should be applied before application of acoustical units.

Acoustical units should not be applied with adhesive directly to non-insulated concrete roof slabs during extremely hot weather (over 105° F.) since the adhesive will be subjected to objectionable softening during the first 3 to 5 weeks. After this time the adhesive will withstand this high temperature. In questionable cases, consideration should be given to other methods of application.

**6. Painted Concrete.** Nailing of units is not possible when they are cemented directly to a concrete surface. The success of the job is therefore dependent on the quality of the paint and its bond to the slab. Unless this can be predetermined, other methods of application should be considered. (See No. 4 above).

**7. USG Gypsum Board Nailed to Wood Strips.** ACOUSTONE "F" can be successfully cemented to SHEETROCK* wallboard or plain ROCKLATH* plaster base (not perforated) or USG sheathing. Where gypsum boards are nailed directly to wood, SHEETROCK wallboard or USG sheathing furnishes a better base than ROCKLATH for application of acoustical units with adhesive. No sizing of the SHEETROCK, sheathing or ROCKLATH is required if adhesives conforming to architectural specifications, page 7, are used. The joints and openings in the SHEETROCK, sheathing or ROCKLATH should be sealed with the adhesive used to erect the tile (applies only where gypsum boards are nailed to wood). ROCKLATH without a scratch and brown coat of gypsum plaster should not be used where exposed to excessive moisture or humidity. Gypsum boards less than 3/8" thick should not be used. Standard sizes of SHEETROCK, sheathing and ROCKLATH are shown in the table below.

**8. Metal Suspension of Gypsum Board.** Where combustible wood furring is not permitted, metal clips are available for attaching ROCKLATH plaster base to 3/4" suspended channels 16" on center. ACOUSTONE may be applied to the ROCKLATH with adhesive as shown on page 9 but a preferred, alternate construction, giving additional rigidity, strength and fire protection is obtained by applying full base coats of gypsum plaster to the ROCKLATH before applying the ACOUSTONE. When base coat plaster is omitted the joints and openings in the ROCKLATH should be sealed with *unsanded wood fibre gypsum plaster* to obtain greater rigidity and seal against air travel. It should be applied approximately 1/16" thick and 2" wide in a continuous ribbon over all joints and at wall angles.

**CAUTION:** *The use of ROCKLATH without plaster is not recommended where job conditions, particularly moisture conditions, are unsuitable. Accordingly, ACOUSTONE shall be applied to such suspension only when the installation of the base is made under the supervision of and to the satisfaction of the USG acoustical contractor.*

| TRADEMARK | STANDARD SIZES | | | Approx. Wt. Per Sq. Ft. | Spacing of 1" x 3" Wood Strips | Approx. Spacing of Nails |
|---|---|---|---|---|---|---|
| | Thickness | Width | Lengths | | | |
| SHEETROCK (Plain) | 1/2" | 48" | 7', 8', 10', 12; | 2.1 lb. | 16" to 24" | 7" |
| SHEETROCK (Plain) | 3/8" | 48" | 7', 8', 10', 12; | 1.6 lb. | 16" | 7" |
| USG SHEATHING | 1/2" | 24" | 8' 0" | 2.1 lb. | 16" to 24" | 8" |
| ROCKLATH (Plain not Perf.) | 3/8" | 16" | 48" | 1.6 lb. | 16" | 4" |

Nails: Use 1 1/8" blued plaster lath nails for either thickness board.
Do not exceed spacings of supports shown in the table and do not use gypsum board less than 3/8" thick.

*Trademarks Reg. U. S. Pat. Off.



BB007 0415

# ACOUSTONE "F"

**9. Wood.** Adhesive application of ACOUSTONE "F" directly to wood strips or plywood without nailing has not proven very successful because of green wood and the tendency of wood to warp. Tile should be securely nailed with finish nails after application with adhesives.

**10. Miscellaneous Surfaces.** Follow the recommendations of approved acoustical contractors for surfaces not listed.

## II. NAILING DIRECTLY TO WOOD STRIPS THROUGH CONCEALED FIBER SPLINES (No Adhesives Used).

Use only 13/16" x 12" x 24" *beveled* ACOUSTONE "F". Request detailed drawing which is self-explanatory.

## III. MECHANICAL SUSPENSION METHODS.

(a) Clip Spline Method (See drawing Page 11).
Use ACOUSTONE "F" 7/8"x12"x24" with beveled edges and centerscored to simulate 12"x12" units. Tee splines and clips together form a free floating construction suspended from the 3/4" channels. The clip allows the 3/4" channels to move in any direction without transferring sufficient stress to the acoustical units to open joints.

(b) Zee Spline Method (See drawing Page 12).
Use ACOUSTONE "F" 7/8" x 12" x 24" size with beveled or square edges. This method eliminates the 3/4" channels and offers an economical, simple, rigid construction. It permits the use of flush joint ACOUSTONE where lighting conditions are not too severe.

Both suspension methods have metal splines in kerfs along the four edges of each unit which support the tile. They also act as a continuous seal to minimize air travel through the joints. Self leveling of tile joints is assured since intersecting corners of four adjacent units are supported on the same member.

The heavily pigmented finish-paint on ACOUSTONE "F" creates high resistance to objectionable air travel through the tile.

## ARCHITECTURAL SPECIFICATIONS FOR ACOUSTONE "F"

### (CEMENTED OR NAILED INSTALLATIONS)

(*Phrases in parentheses are explanatory*)

**1. Scope.** (*List and locate all areas to receive acoustical treatment.*)

**2. Materials.** Acoustical material shall be ACOUSTONE "F" manufactured by the United States Gypsum Company having a (Noise Reduction Coefficient of 65 or 70) (sound absorption coefficient of . . . at 512 cycles per second) as tested by A. M. A. Laboratories; shall be composed of mineral fibers manufactured into tile units with a fissured surface; shall be capable of being brush painted repeatedly with oil paints without loss of sound absorption at 512 frequency or noise reduction coefficient; shall be rated "incombustible" by National Bureau of Standards; shall be finish painted on the exposed surface and bevels (*state color*) with washable paint and have a light reflection coefficient not less than 80% for white (or 70% for ivory), as tested by A.M.A. Laboratories.

(*a*) (*Use when units are applied with adhesive*). (*Choose 1 or 2 following.*)

(1) Units shall be 12" x 12" with square edges and shall have edges kerfed to permit leveling with concealed splines. Units shall weigh no more than 1¾ lbs. per square foot.

(2) Units shall be 12" x 12" with 1/8" beveled edges. Units shall weigh no more than 1¾ lbs. per square foot.

The adhesive shall be of a type manufactured expressly for the purpose; shall not be water soluble, shall not contain ingredients that react chemically with paint, or a solvent that has a stronger solvent action on an oil paint than naphtha; it shall contain no alcohol.

(*b*) (*Use when units are nailed directly to wood furring strips without cement. 13/16" beveled units are recommended for nailing.*) Units shall be 12" x 24", with beveled edges, and centerscored to simulate 12" x 12" units, and kerfed to receive fiber splines.

**3. Installation.** The installation shall be made by an applicator approved by the acoustical material manufacturer.

(a) (*Use when units are applied with adhesive*). Acoustical units shall be securely cemented in place to a (*state base as recommended on page 6*). Not less than 4 spots of adhesive averaging not less than 2½" diameter in direct contact with the tile and the surface to which it is applied shall be used per square foot of tile. Spots shall have a minimum diameter of 2". Tile shall be laid in a (*state pattern as square or diagonal or detail design*), with edges in alignment. (*Use following when square edge units are specified.*) Concealed splines shall be accurately fitted into the kerfs in the edges of the units so that there will be a spline at the junction of 4 abutting units and engaging the corners of all 4 units. Border units shall be scribed to neatly fit abutting surfaces.

(b) (*Use when units are nailed directly to wood furring strips. Only 13/16" beveled units are recommended.*) Units shall be securely attached to 1" x 3" wood furring strips spaced 12" on center, by face-nailing through the tile and concealed fiber splines placed into kerfs at edges of units with 3d or 4d finish nails countersunk slightly below the face of the tile. Necessary framing and anchorage for support of furring strips (shall, shall not) be a part of this work. Border units shall be neatly scribed to abutting surfaces.

### MECHANICAL SUSPENSION, "ZEE-SPLINE METHOD AND CLIP-SPLINE METHOD."

*Note: Use Paragraphs 1, and 2, from above specification except material shall be only 7/8" beveled units 12" x 24" centerscored to simulate 12" x 12" units, kerfed and rabbeted to receive suspension members.*

*Delete paragraphs (a) and (b) under paragraph 2, Materials.*

**1. Installation.** The installation shall be made by an applicator approved by the acoustical material manufacturer. The acoustical tile shall be installed by the *USG Zee-Spline Method or Clip-Spline Method* of mechanical erection. The acoustical contractor shall furnish and install necessary metal grillage and the metal finish channels (or wood mouldings) at wall intersections according to manufacturer's instructions. 1½" channels 4 feet on centers and supporting hangers 4 feet on centers (shall) (shall not) be installed by the acoustical applicator.

# ACOUSTONE "F"

## ACOUSTONE CEMENTED TO GYPSUM BOARDS ON WOOD STRIPS

### SHEETROCK* WALLBOARD

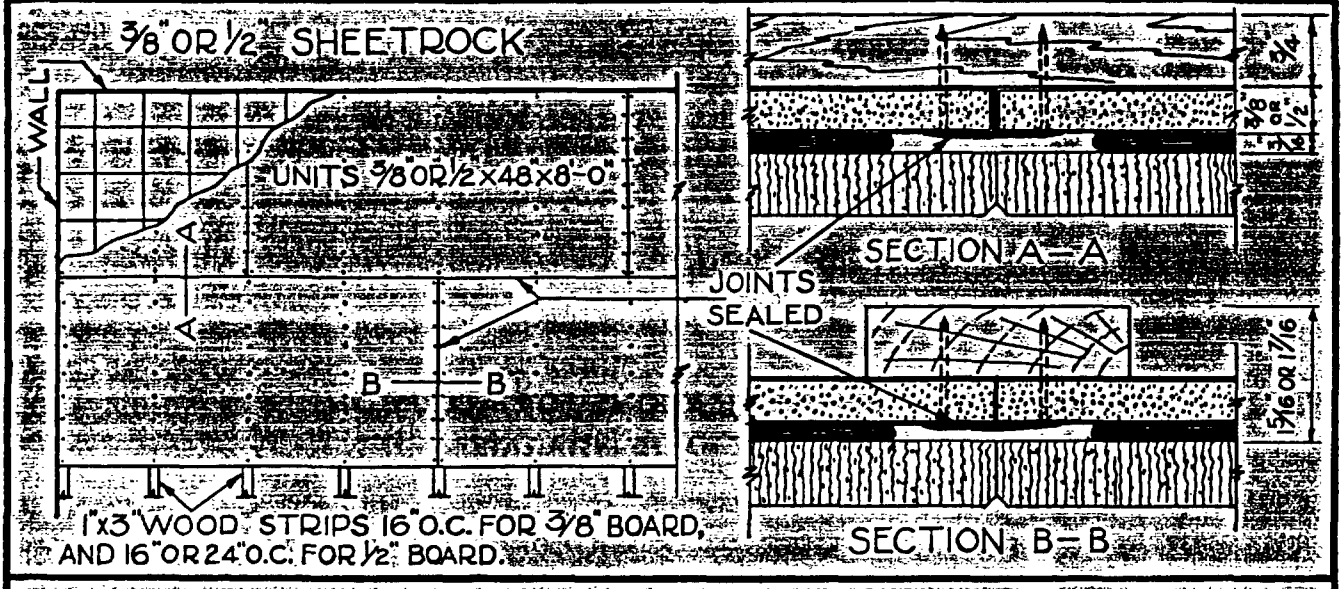


NAILS - 1⅛" 13 GAUGE BLUED ⅜" FLAT HEAD SMOOTH DIAMOND POINT
NAIL SPACING - CEILINGS 7" WALLS - 8"

### ROCKLATH* PLASTER BASE

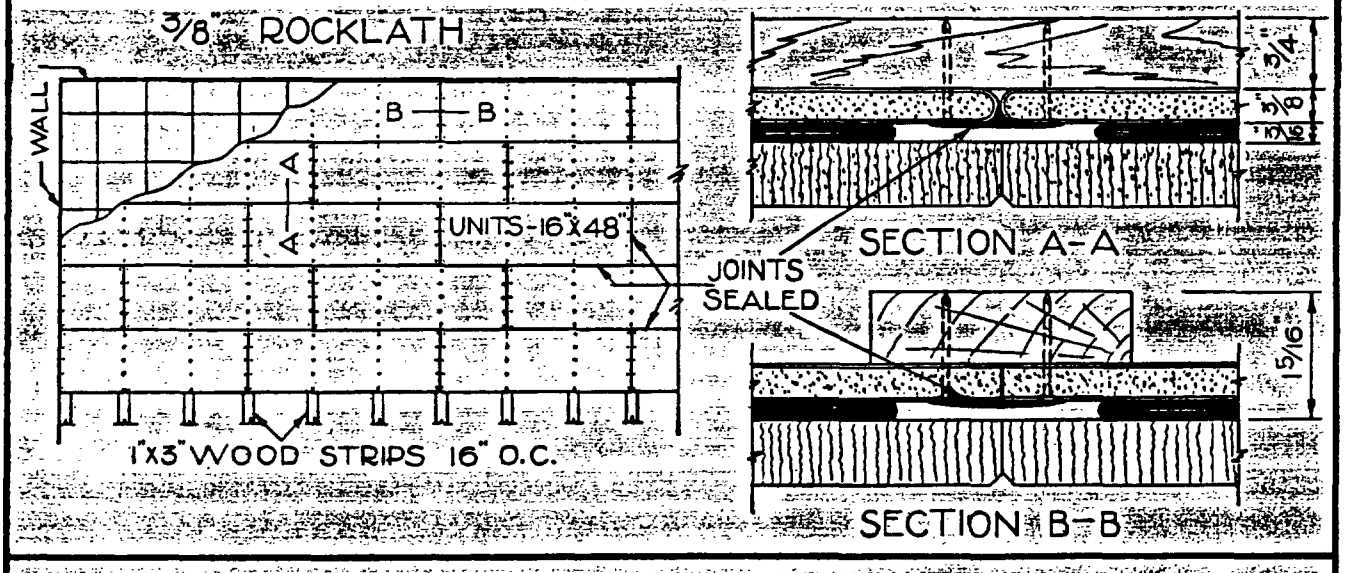


NAILS - 1⅛" 13 GAUGE BLUED ⅜" FLAT HEAD SMOOTH DIAMOND POINT.
NAIL SPACING - APROX. 4" APART.

BB007 0417



*Trademarks Reg. U. S. Pat. Off.

# ACOUSTONE "F"

## ACOUSTONE CEMENTED TO GYPSUM BOARD—METAL SUSPENSION

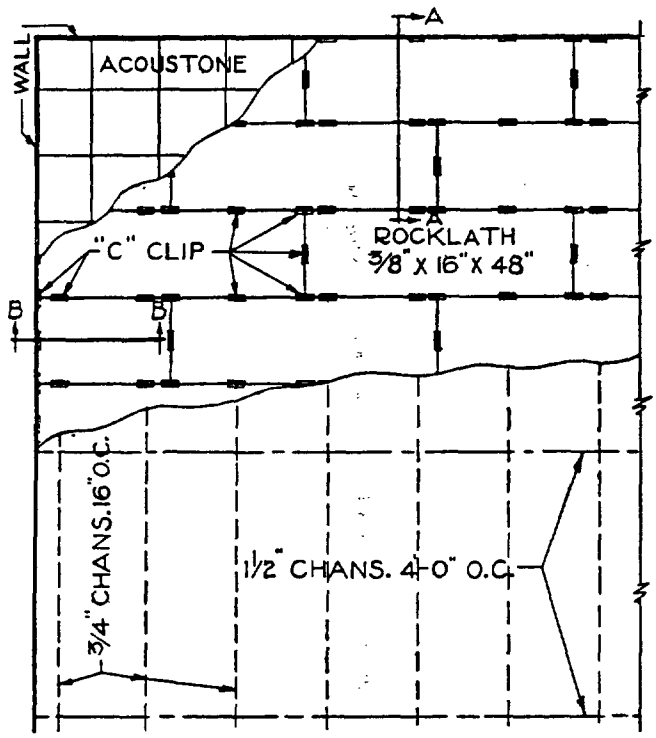


REFLECTED CEILING PLAN

**CAUTION:—**
REFER TO PARAGRAPH 8, PAGE 6

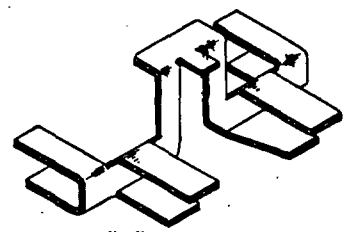

"C" CLIP

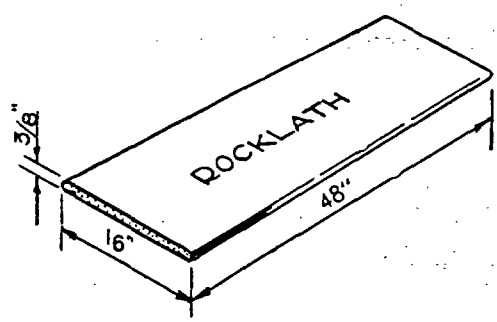


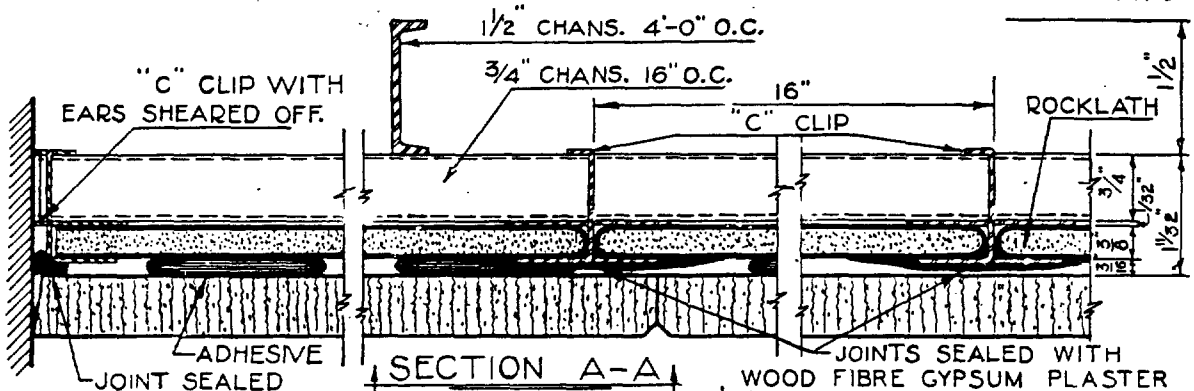


SECTION A-A

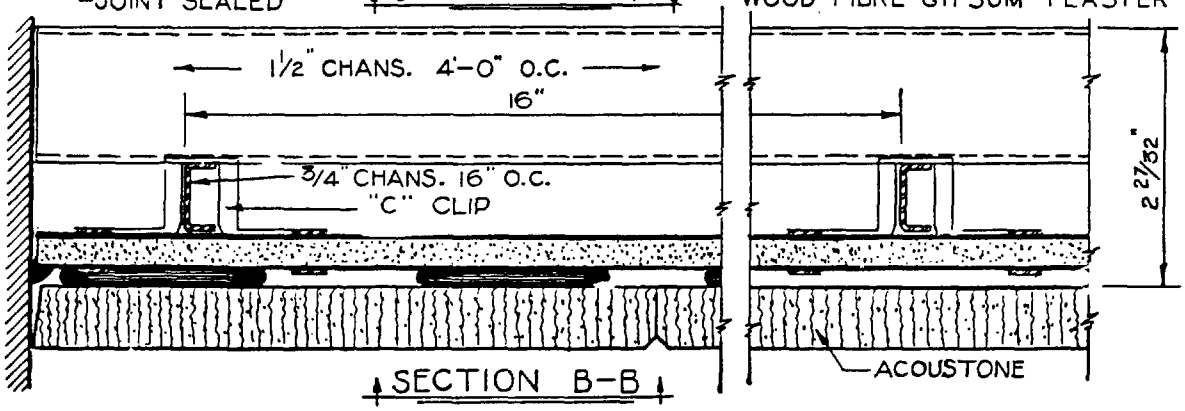


SECTION B-B



BB007 0418

# ACOUSTONE "F"

## MECHANICALLY SUSPENDED ACOUSTONE "CLIP-SPLINE METHOD"

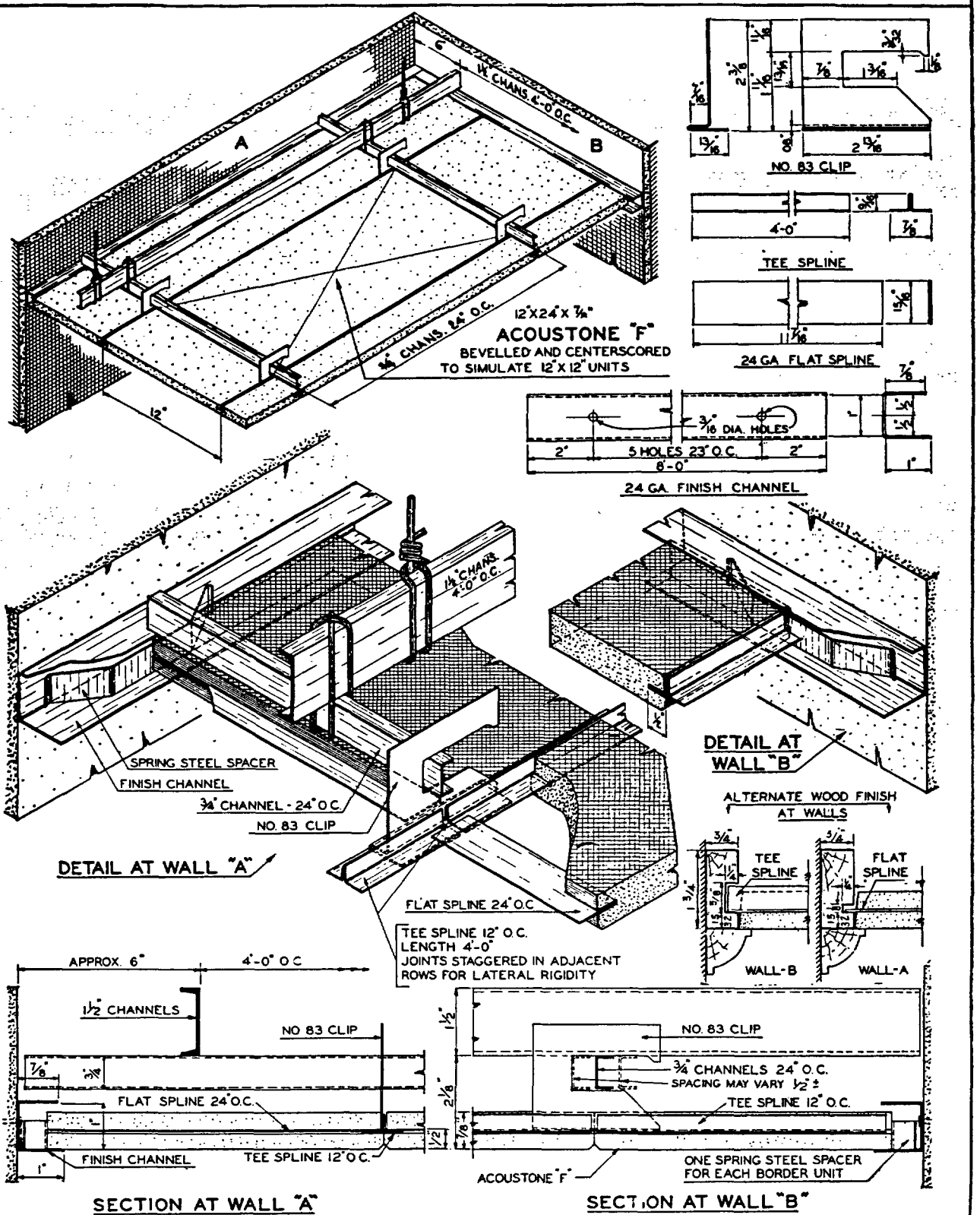

# ACOUSTONE "F"

## MECHANICALLY SUSPENDED ACOUSTONE "ZEE-SPLINE METHOD"

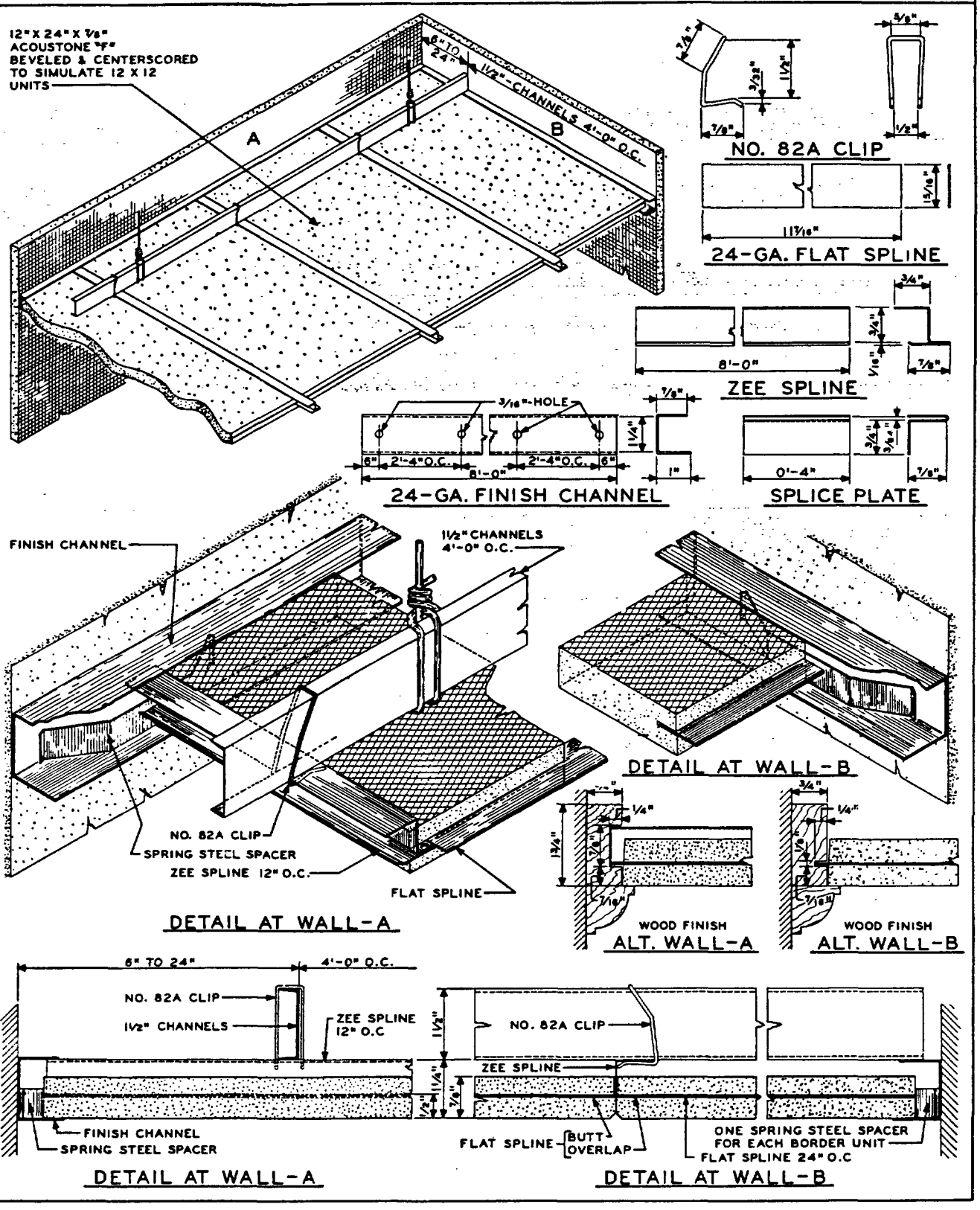


BB007 0420

# MOTIF'D* ACOUSTONE*

## DESCRIPTION

MOTIF'D ACOUSTONE mineral acoustical tile is standard ACOUSTONE "F" mineral acoustical tile with a permanent integral decoration "etched" into its surface by an exclusive USG process. After the "etching" is completed, the tile is mill painted. The pattern is produced by the heavier shadow caused by the "etched" portion of the tile rather than by differences in applied color. Soft, low contrast can be maintained or the pattern can be accentuated by properly positioning the lighting source to increase the shadow effect.

## SIZE

MOTIF'D ACOUSTONE is available in 12" x 12" units; $^{11}/_{16}$" or $^{13}/_{16}$" thick; with square edges only, kerfed for splines.

## FUNCTION AND UTILITY

MOTIF'D ACOUSTONE embodies all the function and utility of ACOUSTONE "F" except for the following:

*Light Reflection*—The light reflection of white MOTIF'D ACOUSTONE is 78%.

*Designs*—Many standard tile patterns are available; or we will execute exclusive patterns of any design limited to "etching" single tile in not more than 2 directions and with a resulting pattern which can be produced within a area four 12" x 12" units.

*Cost*—Costs slightly more than ACOUSTONE "F."

*Installation*—Application with adhesive and splines is the only method recommended using the same methods as for adhesive application of ACOUSTONE "F."

## ARCHITECTURAL SPECIFICATIONS FOR MOTIF'D ACOUSTONE

(Phrases in parentheses are explanatory)

1. SCOPE. (*List and locate all areas to receive acoustical material*).

2. MATERIALS. Acoustical material shall be MOTIF'D ACOUSTONE manufactured by the United States Gypsum Company in (*state color*). Units shall be (*state thickness*) and have a (Noise Reduction Coefficient of . . . ) or (512 frequency coefficient of . . . ) (select from page 5).

Adhesive shall be (*refer to specification under ACOUSTONE "F"*).

3. INSTALLATION. The installation shall be made by an applicator approved by the acoustical material manufacturer. The design shall be (*state standard pattern number or detail design*). The units shall be securely cemented in place. (*Continue according to adhesive application methods for ACOUSTONE "F".*)

## HOW IT WORKS

The unretouched photographs below were made from the same point of the same section of an installation of MOTIF'D ACOUSTONE under three different lighting conditions. (1) The left-hand picture shows about maximum contrast or color difference obtained under normal lighting: (2) The central illustration, the minimum contrast: (3) the reversal of pattern in the right-hand picture, when light was shifted 180° from that used in the left-hand view. Such changes in degrees of contrast are usually apparent in every MOTIF'D ACOUSTONE installation. This "mobile" effect shifts, not only with light changes, but with changes in position of the observer. The pattern never becomes monotonous. The barely measurable reduction in light reflective ability does not cause any significant changes in lighting costs.

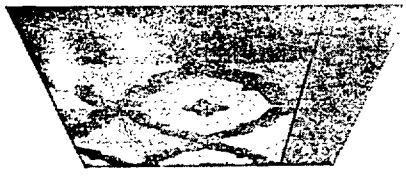

Lighted from upper right corner



Lighted with single lights on either side of camera position



Lighted from lower left corner

## DESIGNS

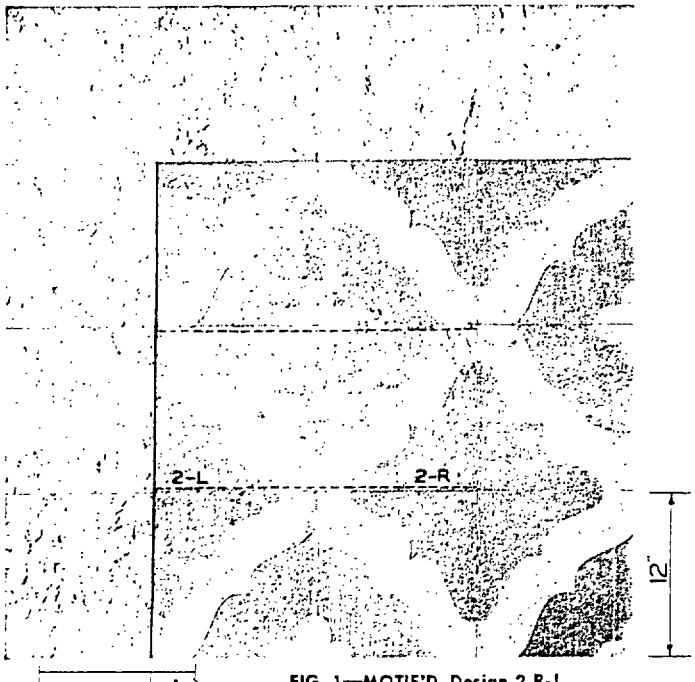


FIG. 1—MOTIF'D Design 2 R-L




FIG. 2—MOTIF'D Design 10 R-L

*Trademarks Reg. U. S. Pat. Off.

BB007 0471

# AUDITONE* ACOUSTICAL TILE

## DESCRIPTION

AUDITONE wood fiber acoustical tile is a slotted wood fiber tile designed to give maximum acoustical efficiency and strength and an unobtrusive, efficient, functional appearance. Each unit is finish-painted at the factory and is available accurately formed, with beveled or tongue and groove edges.

SIZES — ¾" or 1" by 12" x 12" or 12" x 24". (See Technical Data Below.) The 12" x 24" tongue and groove units are scored and slotted to represent two 12" x 12" units with the slots parallel to the long edges.

## FUNCTION AND UTILITY

*Sound Absorption*—AUDITONE is made in two thicknesses with a Noise Reduction Coefficient of .65 and .70 and absorptions at 512 cycles per second of .68 and .79 respectively. (See Technical Data Below.)

*Edge Treatment*—AUDITONE is made with butt bevel edges for cementing to proper bases without supplementary nailing; supplied with tongue and groove edges for blind nailing directly to joists, studs or nailing strips. The tongue and groove maintains level joints and a smooth appearance. Tongue and groove AUDITONE is not recommended for application with adhesive. (See Technical Data Below.)

*Paint and Color*—Finish-painted at the factory on face and bevels in high light reflecting white.

*Weight*—AUDITONE weighs approximately .91 lb. per square foot in the ¾" thickness and approximately 1.23 lbs. per square foot for the 1" thickness. (See Technical Data Below.)

### *Paintability and Maintenance*

AUDITONE can be repeatedly brush or spray painted following normal paint procedures with oil, resin emulsion, casein, calcimine or any of the commercial types of paint without loss of sound absorption at 512 cycles per second or in the Noise Reduction Coefficient. AUDITONE can be cleaned with putty or paste type wallpaper cleaner.

### *Light Reflection*

See Technical Data below.

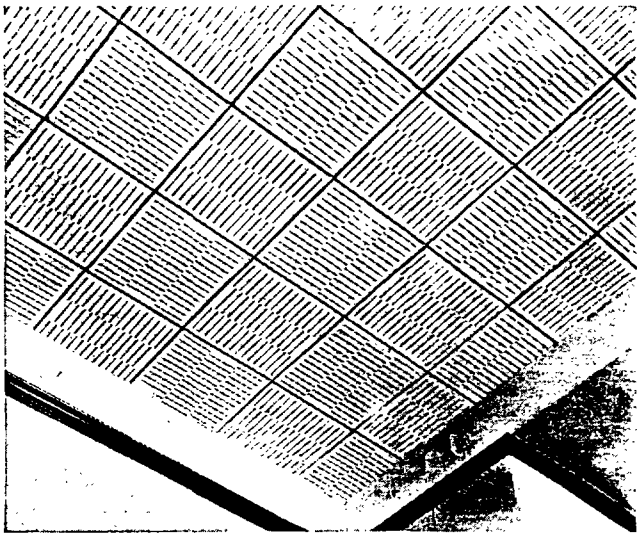

### *Fire Resistance*

Combustible.

### *Heat Conductivity*

AUDITONE has a low thermal conductivity ("k" factor = .38).

### *Resistance to Soiling and Breathing*

The smooth, painted finish of AUDITONE wood fiber acoustical tile resists soiling; and the tongue and groove edge type prevents objectionable air travel through the joints when used on suspended nailing strips.

### *Cost*

Lower in cost than ACOUSTONE.

### *Limitations of Use*

AUDITONE should not be used below wainscot height or where it will be subjected to severe impact or abrasion.

It is not recommended in dish-washing rooms, or where it will be exposed to steam or constant high humidity.

## TECHNICAL DATA

## SOUND ABSORPTION COEFFICIENTS

**Acoustical Materials Association**

| Type | Thickness | Mounting | Coefficients 128 | 256 | 512 | 1024 | 2048 | 4096 | Noise Red. Coef. | Wt. (lbs.) per Sq.Ft. |
|---|---|---|---|---|---|---|---|---|---|---|
| B | 1" | 1 | .13 | .33 | .79 | .85 | .85 | .72 | .70 | 1.15 |
| B | 1" | 2 | .28 | .48 | .64 | .86 | .77 | .75 | .70 | 1.23 |
| C | ¾" | 1 | .09 | .28 | .68 | .80 | .79 | .81 | .65 | 0.91 |
| C | ¾" | 2 | .13 | .49 | .60 | .72 | .80 | .81 | .65 | 0.91 |

**Bureau of Standards**
**Federal Specifications are Based on Bureau of Standards Tests**

| Type | Thickness | Mounting | Coefficients 128 | 256 | 512 | 1024 | 2048 | 4096 | Noise Red. Coef. | Wt. (lbs.) per Sq. Ft. | SS-A-118a Feb. 12, 1948 512 Cycles | N. R. | Type | Class |
|---|---|---|---|---|---|---|---|---|---|---|---|---|---|---|
| B | 1" | 1 | .24 | .50 | 73 | .82 | .75 | .64 | .70 | 1.14 | 105 | 5 | II | C |
| B | 1" | 2 | .19 | .64 | .63 | .72 | .78 | .70 | .70 | 1.18 | 107 | 5 | II | C |
| C | ¾" | 1 | 08 | .30 | .66 | .80 | .86 | .75 | .65 | .79 | 106 | 6 | II | C |
| C | ¾" | 2 | .16 | .64 | .52 | .60 | .72 | .77 | .60 | .97 | 109 | 7 | II | C |

Tile tested were painted with a full finish coat of paint. Mounting No. 1—Cemented to plasterboard—considered equivalent to cementing to plaster or concrete ceilings. Mounting No. 2—Nailed to wood strips.

### LIGHT REFLECTION:

AUDITONE B, White 74%
AUDITONE C, White 72%
Tests by Official A.M.A. Laboratory.

### HEAT CONDUCTIVITY:

k = .38

### FIRE RATING

Combustible

### DESIGN DATA

| UNITS | | SLOTTED | SIZE | CENTER CROSS-SCORED |
|---|---|---|---|---|
| T&G Edge | Field | Yes | (¾" or 1") x 12" x 24" | Yes |
| | Field Fillers | Yes | (¾" or 1") x 12" x 12" | No |
| | Borders | No | (¾" or 1") x 12" x 24" | Yes |
| Butt-Bevel | Field | Yes | (¾" or 1") x 12" x 12" | No |
| | Borders | No | (¾" or 1") x 12" x 12" | No |

*Trademark Reg. U. S. Pat. Off.

BB007 0422

# AUDITONE

## INSTALLATION METHODS

AUDITONE is installed by approved U.S.G acoustical contractors by one of two methods:

1. Application with adhesive (Butt Bevel Type only with or without nailing).

2. Blind nailing directly to wood strips, studs, joists, or other wood supports.

### ADHESIVE APPLICATION (All thicknesses)

See architectural specifications below for amount and type of adhesive recommended.

**Size and Type of Units**

Should not exceed 12" x 12"; use butt bevel type only.

**Bases for Adhesive Application of AUDITONE**

Refer to "Bases for Adhesive Application of ACOUSTONE" page 6.

**Patterns**

A variety of ceiling and wall patterns may be obtained by turning the tile to change the direction of slots on adjacent units or groups of units. Diagonal or square patterns with or without plain borders may be used.

### APPLICATION BY BLIND NAILING (All thicknesses)

**Size and Type of Units**

12" x 24" Tongue and Groove units only are used except for 12" x 12" field filler units adjacent to border.

**Bases for Nailing**

Tongue and Groove AUDITONE 12" x 24" may be nailed to supports spaced not to exceed 16" on center for square pattern and 12" on center for diagonal pattern. Nailing strips need not coincide with joints in acoustical units because of the tongue and groove feature in AUDITONE. Where nailing strips are used the following table gives size and span.

| Size of nailing strips | Maximum space between supports |
|---|---|
| 1" x 2" | 24" |
| 1" x 3" | 36" |
| 2" x 2" | 42" |

Where a suspended ceiling is required, a double grillage is recommended using as main members (2" x 2") (2" x 3") or (2" x 4") which should be cross-furred with wood nailing strips spaced as shown in the above table. Steel channels (1½" or 2") may be used in lieu of the main wood members to which wood nailing strips may be wired. Nailing strips (2" x 2") or (2" x 3") will successfully span 48" if a 1" x 2" stiffener strip is nailed to them midway between and parallel to the 48" supports.

**Patterns**

Patterns are limited by the requirement that all slots must be parallel, the short joints between units offset. Tile may be laid diagonally or perpendicular with supports.

## ARCHITECTURAL SPECIFICATIONS FOR AUDITONE

### CEMENTED INSTALLATIONS

*(Phrases in parentheses are explanatory.)*

**1. Scope.** *(List and locate all areas to receive acoustical treatment.)*

**2. Materials.** Acoustical material shall be AUDITONE (¾" "C" or 1" "B") manufactured by the United States Gypsum Company; and shall be finish-painted on the exposed surface and bevels; with a light reflection coefficient not less than 70% as tested by A.M.A. Laboratories; capable of being brush-painted repeatedly with oil paints without loss of sound absorption at 512 frequency or Noise Reduction Coefficient. The (Noise Reduction Coefficient) (sound absorption coefficient at 512 cps) as tested by A.M.A. shall be not less than *(choose value from sound absorption table on page 13)*.

Units shall be 12" x 12" butt bevelled.

The adhesive shall be (Refer to ACOUSTONE Specification Page 7).

**3. Installation.** (Refer to page 7 except eliminate any reference to splines and spline alignment.)

### NAILED INSTALLATIONS

Note: Use paragraphs 1, and 2, from above specifications except materials shall be T&G AUDITONE 12" x 24".

**1. Installation.** The installation shall be made by an applicator approved by the acoustical material manufacturer. The units shall be installed by blind nailing through the tongue to (wood joists, studs, furring strips, or suitable nailing surface), spaced not to exceed 16" on centers as specified and furnished in place under section "Carpentry." (Wood grounds shall be installed where necessary to furnish a satisfactory nailing base for border acoustical units at their intersection with walls or other abutting surfaces.)

(Reference should be made under "Carpentry" as follows: "Joists or studs or furring strips shall present a suitable level surface to receive acoustical treatment without shimming or additional furring by the acoustical contractor".) Necessary framing and anchorage for support of furring strips (shall, shall not) be a part of this work.

BB007 0423

# AUDITONE

## INSTALLATION DETAILS

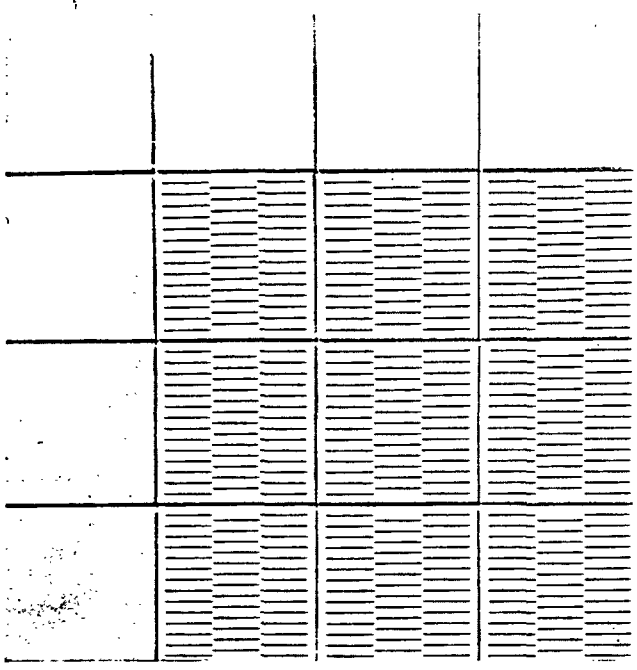

AUDITONE "B"
Field 12" x 12" Laid Parallel—Border 12" x 12" Plain Tile

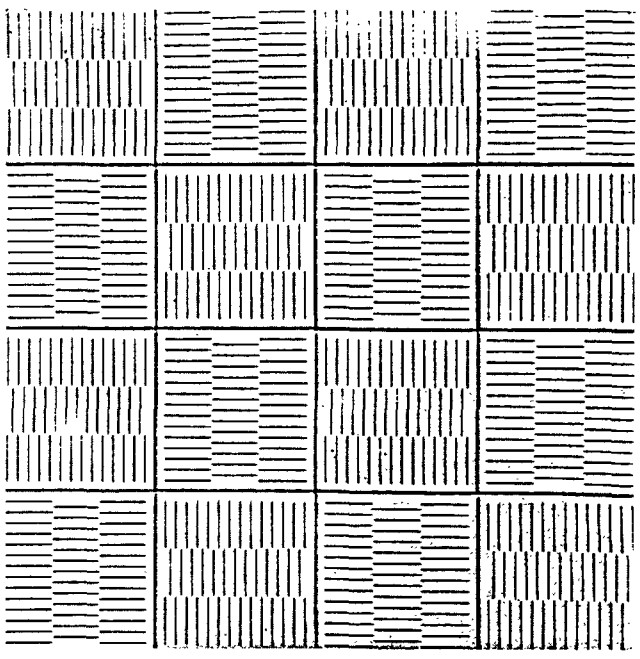

AUDITONE "C"
Field 12" x 12" Checkerboard Pattern—No Border

### Application Methods

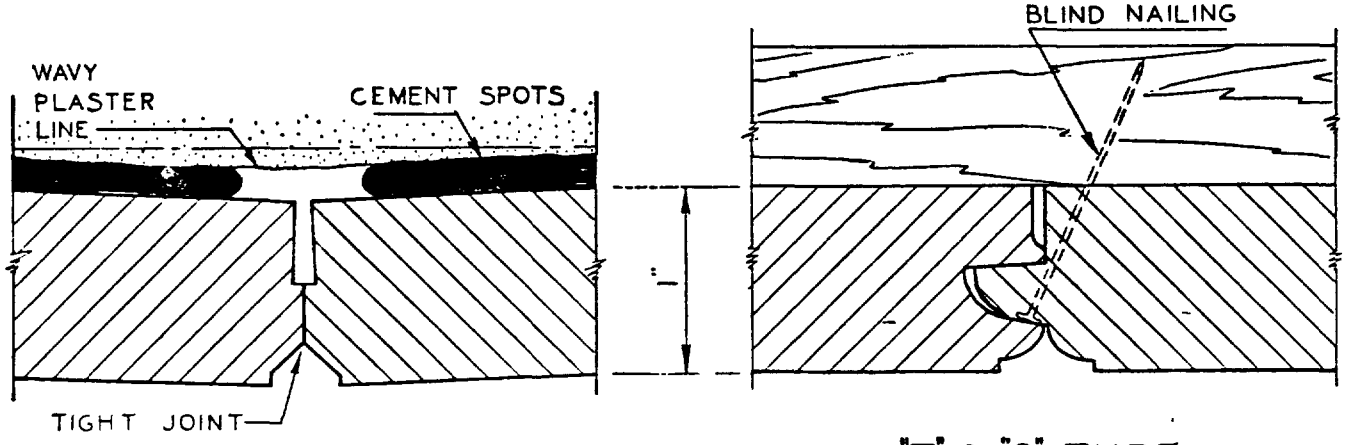


BUTT BEVEL TYPE
FOR
ADHESIVE APPLICATION

"T" & "G" TYPE
FOR
NAILING APPLICATION

## OTHER USG SOUND CONTROL MATERIALS

PERFATONE*—An incombustible acoustical tile of perforated metal enclosing a rock wool absorbent pad. (See pages 16 and 17.) PERFATONE is in a higher price range than ACOUSTONE "F" or AUDITONE.

PERFORATED ASBESTOS BOARD—An incombustible acoustical construction consisting of perforated 3/16" asbestos board covering rock wool pads or blankets. The perforated facing is attached with wood screws or by other means to furring strips. This construction is commonly used in spaces subject to high humidity, impact or abrasion, and in radio studios. It is in a higher price range than ACOUSTONE "F" or AUDITONE.

USG SOUND INSULATION—For insulating rooms against extraneous noises. This special USG construction employs patented resilient floor chairs, and wall and ceiling resilient clips to support room surfaces and furnish an effective barrier against sound travel.

**Trademark Reg. U. S. Pat. Off.*

# PERFATONE* ACOUSTICAL UNITS

## PERFATONE DETAILS

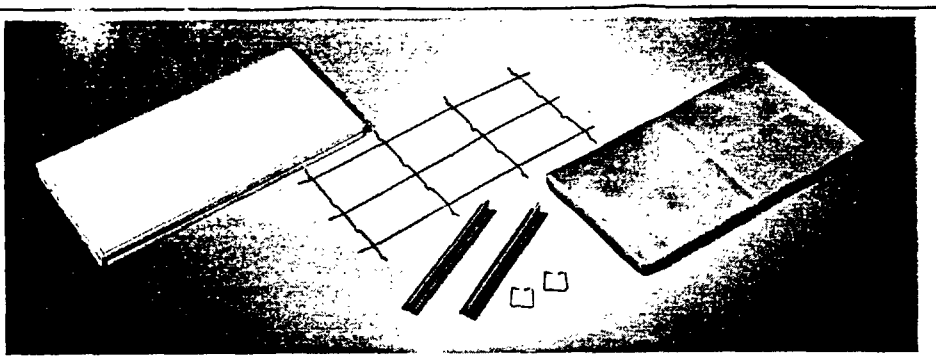

12" x 24" UNITS, CENTER-SCORED TO SIMULATE 12" x 12" UNITS; WIRE GRID SPACER TO SUPPORT MINERAL WOOL PAD; TEE RUNNERS; P-150 CLIPS.

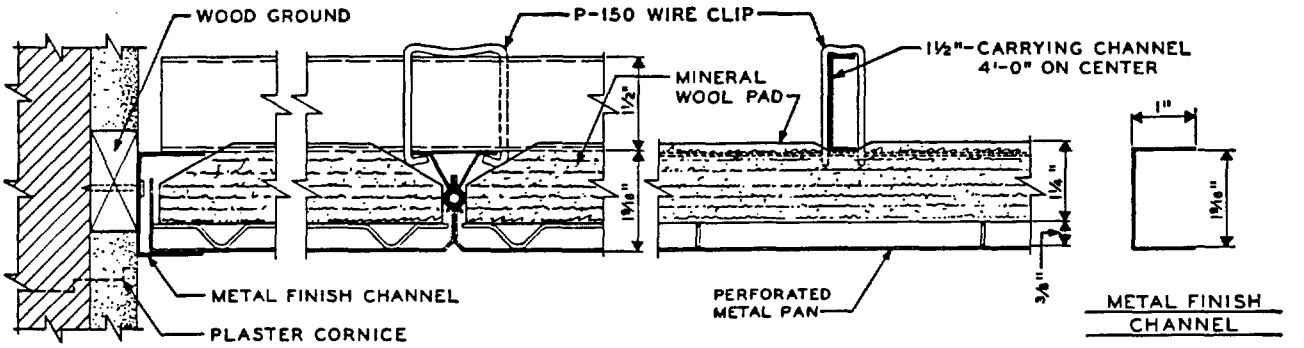


DETAIL SHOWING METAL FINISHING CHANNEL AT WALL

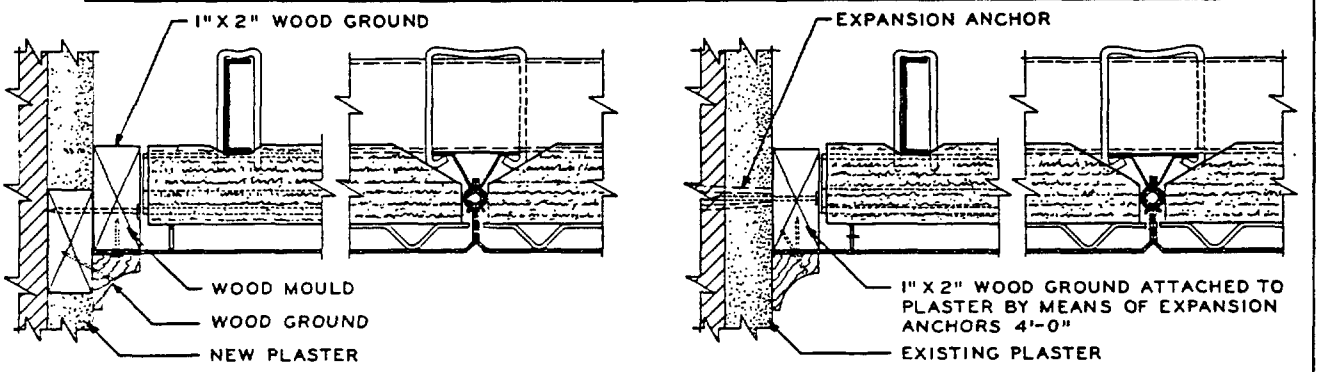


DETAIL SHOWING ATTACHMENT TO NEW AND EXISTING PLASTERED WALLS

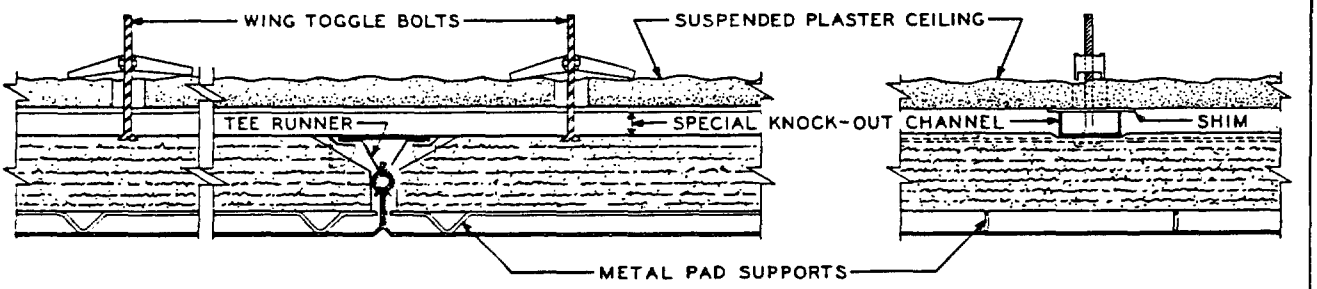


SECTIONS SHOWING DIRECT APPLICATION OF PERFATONE CONSTRUCTION USING SPECIAL KNOCK-OUT CHANNELS TO HOLD TEE RUNNERS

BB007 0425



*Trademark Reg. U. S. Pat. Off.

# PERFATONE* ACOUSTICAL UNITS

**DESCRIPTION**—PERFATONE acoustical construction consists of perforated 26 ga. zinc-coated, enameled steel units 12"x 24" centerscored to simulate 12"x 12" units. Enclosed within the metal units are mineral wool sound absorbent pads supported on galvanized wire mesh pad supports which provide an air space between the metal facing and the pads.

PERFATONE units are also available unperforated to be used as border tile or for unusual decorative effects.

**FUNCTION AND UTILITY**— PERFATONE has high sound absorption and is incombustible, washable and paintable.

*HIGH SOUND ABSORPTION*—PERFATONE has high absorption and an absorption curve which is unusually flat at the significant pitches.

*INCOMBUSTIBLE*—The metal units and the mineral wool pads are incombustible. The pads are wrapped in flame-proofed paper.

*HIGH LIGHT REFLECTION*—PERFATONE has an off white baked enamel finish with a light reflection of 76%.

**LIMITATIONS OF USE**—In areas of high humidity or where moisture might impinge against the acoustical surface, aluminum pans with galvanized fitting or a different architectural design should be considered.

**SOUND ABSORPTION COEFFICIENTS**

**Acoustical Materials Association**

| Mounting | Thickness | Coefficients | | | | | | Noise Red. Coef. | Wt.(Lbs.) Per Sq. Ft. |
|---|---|---|---|---|---|---|---|---|---|
| | | 128 | 256 | 512 | 1024 | 2048 | 4096 | | |
| 3 | 1¼" | .26 | .47 | .97 | .99 | .88 | .88 | .85 | .91 |

Pads were tested in perforated enameled metal pans with pad supports.

Mounting No. 3—Attached to metal supports applied to 1"x2" wood furring.

Light Reflection—White 76%

Fire Resistance—Incombustible

Authority: Bureau of Standards (LC-715. January 1943)

Tests by official A M A Laboratory.

## ARCHITECTURAL SPECIFICATIONS FOR PERFATONE

**(Phrases in parentheses are explanatory)**

**1. Scope.** (*List and locate all areas to receive acoustical treatment.*)

**2. Materials.** Acoustical material shall be USG PERFATONE, perforated 26 ga. zinc coated steel units, 12" x 24", centerscored to simulate 12"x 12" units, the edges of which are beveled and returned vertically to be held firmly in place on the 12" sides by special tee runners. The perforated metal units shall contain mineral wool absorbent pads held slightly away from the perforated metal surface by galvanized wire mesh pad supports. The absorbent pad shall be completely enclosed and sealed on four edges, face, and back with a flame-proofed membrane.

The perforated metal tile shall have a prime coat of baked enamel on the back side; and on the face side, a prime coat and a finish coat of baked enamel.

**3. Installation.** The installation shall be made by an applicator approved by USG.

A. *Suspended ceiling construction.* To a standard 1½" channel grillage furnished by others the acoustical contractor shall fasten the special tee runners spacing them 24" on centers to hold the perforated metal units. Perforated metal units, pad supports, and absorbent pads shall be carefully assembled and pressed into position in the special tee runner. All edges shall be kept in alignment, and care must be taken to secure a level under-surface. A suitable moulding shall be furnished in place by the acoustical contractor (or by others) at the junction of the PERFATONE ceiling with the walls and columns. Care shall be taken in cutting and fitting the units around all openings.

B. *Plastered ceiling construction.* The same as in "A" except that the special knockout channel spaced 24" o.c. shall be attached to the present ceiling by means of suitable clips or wires and brought to a level surface.

**Trademark Reg. U. S. Pat. Off.*



BB007 0426

# SABINITE* ACOUSTICAL PLASTER

## SABINITE TROWEL FINISH "M"

### DESCRIPTION

SABINITE Trowel Finish is a highly efficient acoustical plaster, scientifically prepared to produce a continuous trowel finish of exceptional sound absorbent qualities. It is manufactured in four standard colors and white and requires the addition of water only.

### FUNCTION AND UTILITY

SABINITE Trowel Finish acoustical plaster is particularly effective for sound conditioning.

*Sound Absorption*—Noise reduction coefficient of .60. (See table below.)

*Fire Resistance*—Basically a mineral, it is incombustible.

*Beauty*—Its fine texture troweled surface provides unusual beauty, eliminating the mechanical effect generally associated with acoustical treatment.

*Adaptability*—Conforms to any architectural design. Generally applied over new plastered surfaces, but may also be applied over most existing surfaces through use of a special asphalt emulsion bonding coat according to manufacturer's directions.

*High Light Reflection*—Laboratory tests indicate light reflection of 64 per cent for SABINITE Trowel Finish Oyster White.

*Heat Insulation*—SABINITE Trowel Finish has a "k" value of 0.50.

*Maintenance*—SABINITE Trowel Finish may be cleaned using a putty-type wallpaper cleaner or with a vacuum cleaner using hose and brush attachment.

SABINITE Trowel Finish may be redecorated with TEXOLITE* paint (Standard or Imperial). Apply according to USG specification for painting SABINITE acoustical plaster. (See Page 4)

Tests by a nationally recognized laboratory showed

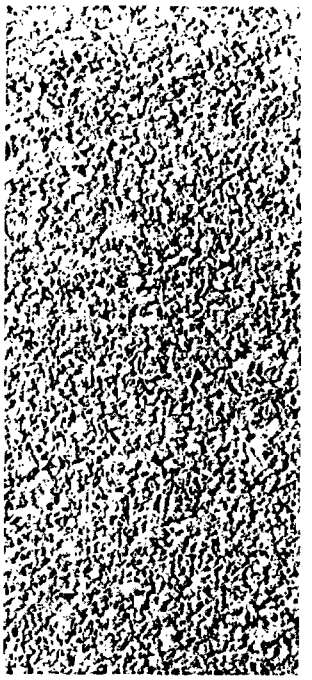

Sabinite Trowel Finish

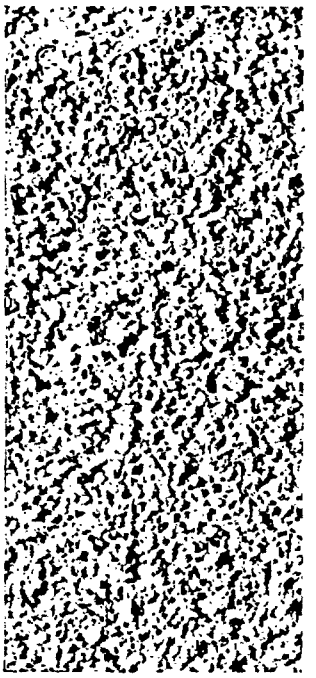

Sabinite Float Finish and 38

SABINITE Trowel Finish had no loss in noise reduction coefficient after 2 spray coats of Imperial TEXOLITE paint were applied.

*Easily Applied*—Any good plaster craftsman can apply SABINITE.

*Economical*—Gives more sound absorption per dollar invested than most other commonly used acoustical materials. Low in initial cost.

### LIMITATIONS

1. Designed for use on ceilings and areas not exposed to rough usage.
2. Should not be used where exposed to excessive moisture, (See SABINITE 38—Next Page), and should not be used on the exterior where exposed to the elements.
3. To insure best results, SABINITE must be applied in strict accordance with manufacturer's directions.

## SOUND ABSORPTION DATA

| SABINITE Type | Thickness | 128 | 256 | 512 | 1024 | 2048 | 4096 | NRC | Authority |
|---|---|---|---|---|---|---|---|---|---|
| Trowel Finish | ½ Inch | .18 | .24 | .45 | .78 | .85 | .83 | .60 | B. of Stds. |
| Float Finish | ½ Inch | .19 | .22 | .43 | .80 | .75 | .75 | .55 | B. of Stds. |
| 38 | ½ Inch | .25 | .26 | .32 | .60 | .76 | | .50 | Riverbank Lab. |

*Trademarks Reg. U.S. Pat. Off.



BB007 0427

# SABINITE ACOUSTICAL PLASTER

## SABINITE FLOAT FINISH "F"

### DESCRIPTION

SABINITE Float Finish is a highly efficient acoustical plaster used where a float finish is desired. It is manufactured in four standard colors and white and requires the addition of water only.

### FUNCTION AND UTILITY

SABINITE Float Finish acoustical plaster is effective for sound conditioning and has a slightly harder surface than SABINITE Trowel Finish.

*Sound Absorption*—Noise Reduction Coefficient of .55. (See table on opposite page.)

*Fire Resistance*—Basically mineral, it is incombustible.

*Appearance*—Its continuous floated surface provides the appearance of a heavy sand float finish.

*Adaptability*—Conforms to most architectural designs.

*High Light Reflection*—Laboratory tests indicate light reflection of 54 per cent for SABINITE Float Finish Oyster White.

*Heat Insulation*—SABINITE Float Finish has a "k" value of 0.76.

*Maintenance*—SABINITE Float Finish may be cleaned with a vacuum cleaner using hose and brush attachments. SABINITE Float Finish may be redecorated with TEXOLITE paint (Standard or Imperial). Apply according to USG specification of painting SABINITE acoustical plaster. (See following page)

### LIMITATIONS

1. Designed for use on ceilings and areas not exposed to rough usage.

2. Must be applied over new plastered surfaces.

3. Should not be used where exposed to excessive moisture (use SABINITE 38), and should not be used on the exterior where exposed to the elements.

4. To insure best results, SABINITE Float Finish must be applied in strict accordance with manufacturer's directions.

## SABINITE 38

### DESCRIPTION

SABINITE 38 is an hydraulic acoustical plaster prepared for use in locations subjected to high moisture conditions. It is manufactured in white only and provides a float finish.

### FUNCTION AND UTILITY

SABINITE 38 is effective for sound conditioning in shower rooms, for ceilings in swimming pools, etc.

*Sound Absorption*—Noise Reduction Coefficient of .50. (See table on opposite page.)

*Fire Resistance*—Basically a mineral, it is incombustible.

*Appearance*—Its continuous floated surface provides the appearance of a heavy sand float finish.

*Adaptability*—Conforms to most architectural designs.

*Heat Insulation*—SABINITE 38 has a "k" value of 0.80 (estimated).

*Maintenance*—SABINITE 38 may be cleaned with a vacuum cleaner using hose and brush attachments.

It may be painted with Imperial TEXOLITE paint applied according to USG directions which will vary with conditions encountered. These directions are available upon request.

### LIMITATIONS

1. Designed for use on ceilings and areas not exposed to rough usage.

2. Must be applied only over a portland cement-lime basecoat.

3. To insure best results, SABINITE 38 must be applied in strict accordance with manufacturer's directions.

# PLASTERING SPECIFICATIONS

### GENERAL PROVISIONS

In cold weather a minimum temperature of 40°F. shall be maintained in the building until the plaster is dry. After plaster has set, ventilation shall be provided to eliminate excessive moisture in the building. In hot, dry weather, all openings shall be closed with sash or cloth during the application of plaster. No plaster shall be allowed to dry before setting.

### SCOPE

Unless otherwise shown on drawings, all walls and ceilings shall be finished as herein described.

### MATERIALS

*Finish Coat*—Acoustical plaster shall be SABINITE Acoustical Plaster (Trowel Finish) (Float Finish) (Type 38) (Specify) manufactured by United States Gypsum Company. Color shall be as designated by the architect.

### MIXING AND APPLICATION

Mixing and application of SABINITE Acoustical Plaster and the basecoat plaster shall be in strict accordance with the manufacturer's printed directions which are hereby made a part of this specification.

*Note to Architect: For these printed directions refer to Technical Information Folder for SABINITE Acoustical Plaster AIA File Number 39-B.*

# ACOUSTICAL SERVICE

Installation of acoustical tile is by United States Gypsum Company approved District Contractors. Upon request, the United States Gypsum Company, or its authorized acoustical contractors, will make analyses and recommendations, without obligation, on sound control problems. A complete line of acoustical materials is available.

## USG ACOUSTICAL CONTRACTORS

| | | | |
|---|---|---|---|
| **ARKANSAS** | Fort Smith | Harry G. Barr Co. | 424 Garrison Ave. |
| | Little Rock | Nevil C. Withrow Co. | Pyramid Bldg. |
| **CALIFORNIA** | Los Angeles | Acoustical Contractors, Inc. | 1701 W. Slauson Ave. |
| | San Francisco | F. K. Punney, Inc. | 636 Clay St. |
| **COLORADO** | Denver | Construction Specialties Co. | 2026 Arapahoe St. |
| **CONNECTICUT** | Hartford | W. T. Roberts Construction Co. | 60 Putnam St. |
| **DISTRICT OF COLUMBIA** | Washington | Anning-Johnson Co., Inc. | 1733 Wisconsin Ave., N. W. |
| **FLORIDA** | Miami | Ray-Hof Agencies | 3004 N. W. North River Drive |
| | Orlando | Ray-Hof Agencies | 1338 Church St. |
| **GEORGIA** | Atlanta | Lewis & Co. | 33 Hunter St., S. W. |
| **ILLINOIS** | Chicago | Anning-Johnson Co., Inc. | 1514 W. Van Buren St. |
| | Moline | Builders Sales & Service Co. | 1516 Fourth Ave. |
| | Peoria | Watson Engineering Co. | 507 First National Bank Bldg. |
| | Rockford | Acoustical Engineering Co. | 614 Shaw St. |
| **INDIANA** | Indianapolis | Brown-Anning-Johnson Co. | 1720 Alvord St. |
| **IOWA** | Cedar Rapids | Midland Acoustical Contractors | Security Bldg. |
| | Davenport (See Moline Ill.) | | |
| | Des Moines | Anning-Johnson Co., Inc. | 914 W. Grand Ave. |
| **KENTUCKY** | Louisville | Pochel-Chowing Co., Inc. | 1404 W. Market St. |
| **LOUISIANA** | Baton Rouge | Pioneer Contract & Supply Co. | 2510 Government St. |
| **MARYLAND** | Baltimore | Anning-Johnson Co., Inc. | 1126 O'Sullivan Bldg. |
| **MASSACHUSETTS** | Cambridge | W. T. Roberts Construction Co. | Third & Rogers Sts. |
| **MICHIGAN** | Detroit | The Nichols Co. | Michigan Bldg. |
| | Grand Rapids | Harold R. Sobie Co. | 956 Cherry St. |
| **MINNESOTA** | Minneapolis | Hauenstein & Burmeister, Inc. | 614 Third Ave. South |
| **MISSISSIPPI** | Greenwood | Stokes Interiors of the Delta, Inc. | 200 Carrollton Ave. |
| | Jackson | Stokes Interiors, Inc. | 126 S. Farish St. |
| **MISSOURI** | Kansas City | The Stokes Company | 2035 Washington St. |
| | St. Louis | Hamilton Co. | 4239 Lindell Blvd. |
| | St. Louis | Atkinson-Lindberg Co. | 3926 Lindell Blvd. |
| **NEBRASKA** | Omaha | Porter-Trustin Co. | 910 S. Saddle Creek Road |
| **NEW JERSEY** | East Orange | Woolsulate Corporation | 21 S. Sixteenth St. |
| **NEW YORK** | Buffalo | Davis-Fetch & Co., Inc. | 236 Scajaquada St. |
| | New York | Waldvogel Bros., Inc. | 17 E. 42nd St. |
| | Rochester | S. A. Spencer | 135 Spring St. |
| | Syracuse | A. P. Madden Co. | 218 Harrison St. |
| **NORTH CAROLINA** | Greensboro | Bonitz Insulation Co. | 411 Prescott St. |
| **OHIO** | Cincinnati | R. E. Kramig & Co. | 222 E. Fourteenth St. |
| | Cleveland | Anning-Johnson Co., Inc. | 1836 Euclid Ave. |
| | Cleveland | H. A. Erf Acoustical Co. | 3808 Carnegie Ave. |
| **OKLAHOMA** | Oklahoma City | Denman Floor Co. | 3023 N. Oklahoma St. |
| **OREGON** | Portland | Emert and Zednek Co. | 3520 N. E. 57th St. |
| **PENNSYLVANIA** | Philadelphia | W. M. Mover Co. | 1616 Walnut St. |
| | Pittsburgh | Standard Floor Co. | 185 41st St. |
| **TENNESSEE** | Chattanooga | The Currin Co. | 1208 Carter St. |
| | Memphis | R. Cluck Floor Co. | 676 Jefferson Ave. |
| | Nashville | The Workman Co. | 817 8th Ave. South |
| **TEXAS** | Dallas | Macatee, Inc. | 4703 Bengal St. |
| | Fort Worth | Builders Material Co., Inc. | 2307 Montgomery St. |
| | Fort Worth | Gunn & Briggs Co. | 2111 Montgomery St. |
| | Houston | Macatee Inc. | Room 653A, M & M Bldg. |
| | San Antonio | General Supply Co. | 227 S. Salado St. |
| **UTAH** | Salt Lake City | Elias Morris & Sons Co. | 250 East South Temple St. |
| **VIRGINIA** | Richmond | W. Morton Northen & Co., Inc. | 2 North Sixth St. |
| **WASHINGTON** | Seattle | Pioneer Sand & Gravel Co. | 901 Fairview Ave., North |
| | Spokane | Mansur Materials Co. | 210 E. Riverside |
| **WEST VIRGINIA** | Huntington | Frank B. Groves | P. O. Box 1872 |
| **WISCONSIN** | Milwaukee | Insulation Service Co. | 2317 W. Lisbon Ave. |

USG UNITED STATES GYPSUM COMPANY

MEMBER OF

BB007 0429