PROCEEDINGS

OF THE

FIRST CO-OPERATIVE SAFETY CONGRESS

HELD UNDER THE AUSPICES OF

ASS'N OF IRON AND STEEL ELECTRICAL ENGINEERS

MILWAUKEE, WIS.,

SEPT. 30th TO OCT. 5th, 1912

HEADQUARTERS, HOTEL PFISTER

PRINCETON
UNIVERSITY
PRESS

RESOLUTIONS ADOPTED

Whereas, The Association of Iron & Steel Electrical Engineers regarding as worthy of particular attention the hazards to life involved in electrical operations in steel mills, and appreciating the importance of the General Safety Movement not only in electrical engineering, but also in the steel industry as a whole, and in all the other varied and important industries of our country, and having met with such prompt co-operation in their proposals to establish a National Organization devoted to securing increased safety to human life, have reached the conclusion that such an organization can best be brought about by action at this joint meeting of the Association of Iron & Steel Electrical Engineers and the Co-operative Safety Congress, and it is, therefore, hereby

Resolved, That the President of the Association of Iron & Steel Electrical Engineers be requested to take the first steps towards the formation of a National Organization for the promotion of safety to human life by appointing a Committee on Permanent Organization, which shall contain representatives of the Federal and State Agencies already established to supervise conditions of safety in our industries, and shall also contain representatives from the Mining, Transportation and Manufacturing Industries of the United States, and be it further

Resolved, That the Committee so appointed shall be and hereby is authorized by this Congress to organize and to create a permanent body devoted to the promotion of safety to human life in the industries of the United States; this Committee to have authority to call future Congresses of safety, increase its membership if it so desires, and to do such other acts as will promote the object for which it is established.

Committee Appointed

Dr. Chas. P. Neill, U. S. Commissioner of Labor.
Dr. Joseph A. Holmes, Director Bureau of Mines.
Chas. C. McChord, Interstate Commerce Commission.
Mr. F. W. Houk, Commissioner of Labor, Minnesota.
Dr. L. W. Chaney, Department of Commerce and Labor.
Mr. H. M. Wilson, Bureau of Mines.
Dr. M. J. Shields, National Red Cross.
C. W. Price, Wisconsin Industrial Commission.
Mr. James T. McCleary, Iron & Steel Institute.
Mr. John Kirby, Jr., National Association of Manufacturers.
Mr. R. C. Richards, Chicago and North Western Railway.
C. L. Close, U. S. Steel Corporation Safety Committee.
F. C. Schwedtman, National Association of Manufacturers.
David Van Schaack, Aetna Life Insurance Company.
Mr. R. J. Young, Illinois Steel Company.
Mr. L. R. Palmer, Association of Iron & Steel Electrical Engrs.

FEDERAL SESSION

Chairman: DR. CHAS. P. NEILL, Commissioner of Labor, Washington, D. C.

"Opening Prayer,"
DR. EDW. A. STEINER, Professor of Applied Christianity, Grinnell College.

"Safety in Coal Mining,"
DR. JOS. A. HOLMES, Director of Bureau of Mines.

"Work of the Federal Government for the Prevention of Railroad Accidents and Its Results,"
CHAS. C. MCCHORD, Commissioner, Interstate Commerce Commission.

"Industrial First Aid,"
DR. M. J. SHIELDS, National Red Cross.

"Labor, a National Asset,"
DR. EDW. A. STEINER.

FEDERAL SESSION

Dr. LUCIAN W. CHANEY, Department of Commerce and Labor, presiding

---

The Chairman: I wish to impress upon those present that the effort in which we have entered in connection with this Congress is distinctly a phase of applied Christianity, and therefore it is exceedingly appropriate that we invite Dr. Steiner, Professor of Applied Christianity in Grinnel College, to offer a word of prayer as we begin.

OPENING PRAYER

Dr. EDW. A. STEINER, Professor of Applied Christianity, Grinnell College

Dr. Edward A. Steiner: Oh Lord, our God, who dost promise to those who meet in Thy name Thine own presence, we have come together not to consider our own weal or wealth; we have come here in Thine own name to consider the well being of our fellowmen, and we would invoke Thy blessing, ask Thee to meet with us whom Thou hast chosen to be co-workers with Thee. We pray that Thou may be with us and help us not only to light the way, but help us to keep the way, and grant that everything that shall be done at this Congress shall work for the well being of our fellow men, for the glory and development of our own country, and for the speedy coming of the Kingdom of God. May our consideration of the safety of labor and the toiler be rewarded by a higher respect for humanity as a whole, a greater regard for law, a purer and deeper and higher patriotism, wilst Thou bless this city in which we meet, this Commonwealth, our beloved country, the president of the United States, his cabinet and all his officers, this great country and all its states from one end to the other and may it continue to be the great beacon to the world, lighting toward liberty and toward progress, and may the work which we do here this morning be a contribution toward that end. Bless the president of this Association, all the officers, all those who take part, and may it be as solemn as it is sacred, and may it be as useful as we try to make it holy. We ask it all in the Master's name, who gave himself for the good of men. Amen.

The Chairman: I shall not undertake to fill in the space on the program assigned to Dr. Neill. I regret, as we must all, that he is so occupied with other important matters that it is not possible for him to be here and take the share which he would so gladly take in the inauguration of this particular movement. I shall do no more than announce the First Co-operative Safety Congress is now in session and ready to proceed to the carrying out of the program which has been provided.

I have the pleasure of calling first upon Dr. Holmes of the United States Bureau of Mines to present a paper on "Safety in Coal Mining". I may say that it seems very appropriate to me that the activities of the Federal Government along these lines of betterment of working conditions should thus appear at the very outset of our program. I believe that our Federal Government is doing a very large amount of work which is not well known or fully appreciated by the general public, and for that reason it seems to me appropriate that these papers should appear at the very outset of our program.

SAFETY IN COAL MINING

Dr. Jos. A. Holmes, Director of Bureau of Mines

Mr. Chairman and Ladies and Gentlemen: The gathering of a body like this is but one of the many evidences which we see to-day of the need of more attention to safety. When we read almost daily in the paper of accidents occurring among the best educated and most skillful people of the country who will persist in jumping on and off the street cars and trains, flying on flying machines, riding, speeding in automobiles around sharp curves, and other conditions like that; when even the ladies in our household will slip on our rugs, on waxed floors—we have accidents of all kinds, as I say, among even the most thoughtful and educated people of the country.

Now, if that be true, we need not be surprised at the high list of accidents which we find among the classes of people who never have enjoyed the advantages of the class of people I have just mentioned. When, therefore, we speak of a miner as being responsible, through

his carelessness for the accidents which befall him, we must at the same time recall the responsibility of those of us who meet with accidents from other causes in our daily routine.

Now, so general has become the talk of accidents to-day that we are beginning to realize something of the magnitude of the accidents to the common people in this country. When we get the statistics by the thousands and hundreds of thousands of people who are in one way or another, to a lesser or greater extent, injured every year, we are beginning really to seriously think about this situation.

One of the encouraging featurs is that during the past few years the people have come to think about it more strenuously and to take more urgent and positive precaution. We are beginning to see the improvements already at hand. Some of you will recall that only a few years ago we had a list of fatal accidents ranging frequently as high as a hundred and a loss of property ranging sometimes as high as a million dollars, resulting from accidents in the transportation of explosives, and so there was a general demand that something should be done. Within three years, under the activities of the bureau for the safe transportation of explosives authorized by Congress and approved and enforced by the railroad companies of the country, accidents and loss of property from that source have nearly reached the zero point.

So too with regard to railroad accidents. There seemed a problem which neither the company, or the individuals, or the state government, or Federal government, had tackled with sufficient courage or concerted action to bring about any decided success. But the statistics which we get of what has resulted during the past few years, of what has resulted through the united activity of the state governments, the Federal government and the railroads, certainly has been encouraging.

Nothing has been said of greater moment in this country than a recent statement of Senator Root that the American people were making up their mind as to what they wanted done. If the individual would do it, well and good, if he did not do it, and the state did do it, well and good, but if the state did not do it, regardless of the constitution there would be so general a demand that the Federal Government would have to co-operate in doing it. We all recognize certain fundamental differences between the state government and the Federal Government, their rights and their duties, and the rights and duties of individuals. We all hope

those differences will be maintained for we believe it is for the general welfare of the country. At the same time let us not forget the general fact that these things ought to be done and they will be done by the American people and perhaps, after all, some of them may be done better by general co-operation, by general agencies. Just as no individual to-day can live unto himself, no community can live unto itself, no state can live unto itself, no one general government can live unto itself. You realize in the early development of this country each man had to look out for himself, clear the ground, destroy the game which would be injurious to his crops, and get enough to eat and enough to wear. But to-day that condition has all passed, and we find that we do not have to live as individuals, and with our more than two hundred thousand miles of railways, more than fifteen million miles of telegraph and telephone lines in this country, no part of this country can live unto itself. Consequently whatever is accomplished in a general way towards the reduction of accidents must be accomplished by general co-operative effort.

I believe it will be unfortunate, and you must all agree with me, if too great burdens are placed upon the Federal Government. I believe it is a mighty good thing which we all recognize now and we always should recognize, that the people should be governed as near to themselves as possible, by their municipalities and by their state, where the police control rests to-day under the constitution, and where I believe it always should rest.

With reference to railway transportation, the difficulties of having the supervision by the state became long ago so apparent that while there was at that time some opposition to the Federal supervision of transportation facilities, that opposition has practically disappeared to-day, because of the apparent fitness of things, as this work has developed, and so we see to-day the rules and regulations prescribed under congressional action by the Interstate Commerce Commission for the safety, behavior and practice of employees of railway companies, which we regard as a fitting effort, the thing to do. But not so with the mines. The mines themselves are stationary. They are just as thoroughly under the police supervision and control of the state as are any of the other functions or people living in the state. We cannot move these mines from one state to another, and while there are occasionally efforts made to have the Federal Government intervene in the making of rules

and regulations and laws with reference to mining, they have not met with much success, and I hope it won't meet with much success because I think that ought to be cared for by the state.

What then, you may ask, has the Federal Government to do with mining? It is true all mining products to-day are absolutely essential to the welfare of the people of this country, and in the manufacture and transportation of steel with which you people are particularly associated, you probably never think of state boundaries at all. You travelled from all parts of the United States to this convention without any thought of when you crossed boundaries between states. You travelled on the products of the mines, and could not get here without those products, coal and steel, with which the railroad companies are bound up. While these mining products are absolutely essential to the welfare of every man, woman and child in the United States to-day, and are therefore and therein national in character, at the same time it is not necessary that the Federal Government should interfere in the police regulation of these mining industries.

There is another thing which the Federal Government can do, and which, in my judgment, it ought to have undertaken long ago. As I said a few moments ago, I am finding that everything is, and in a great rapidly growing country like this must be, co-operative in its efforts. We have forty-eight different states. If each one of these states has to-day to conduct investigations to find out what the troubles are in the mines, the fundamental troubles, not because of mine accidents, but because of the unhealthy condition of many of our mines there is enormous duplication of effort. If that is all done by the Federal Government, which conditions do not depend upon climatic changes, latitude or longitude, but where the actual condition found in the mines is just the same, whether in California, in Nova Scotia, Virginia or Georgia, there is where the Federal Government can do things efficiently and with less cost and less effort than would be true if the same things were done by each one of these forty-eight states.

The constitution does leave to the states the police supervision, and it does provide, under the General Welfare clause of the constitution, for the conduct of such investigations as the Federal Government has conducted with so marked success for the benefit of agriculture, for the benefit of mining, and for the benefit of any other of its great industries. So I believe to-day

whatever opposition may have existed some years ago to the Federal Government undertaking investigations, that opposition has practically disappeared, and the only trouble we are laboring under now is the fact that with the rapidly growing government we have in this country, with its ever rapidly increasing expenditures, there comes the difficulty of getting sufficient appropriations for doing this work, even when done in an economic and efficient manner by the Federal Government for the state. And those who are urging that these investigations should be left to the states or to private corporations, or somebody else, say that it does not have to come out of the treasury for which they are responsible.

I think we should not lose sight of the fact, however, that there is an endless need for investigation. Consequently investigations should not be left to the Federal Government alone. I am delighted to see every year the number of corporations in this country who are employing engineers, chemists, and other experts, to conduct detailed investigations for them to help build up their industry, and this practice is rapidly increasing. We see that sort of thing in Germany where we have had such tremendous progress in the development of practical operations of industries. I was surprised to learn from a distinguished Japanese, a few years ago, that whereas they graduated their first chemist in 1876 Japan has to-day three thousand chemists at work trying to build up Japanese industries. And so it is going on everywhere in the civilized world, America should lead, but it will have to work hard even to keep up with Germany and Japan and other countries in this march of progress led by technically trained men. Then, too, there are municipal organizations, civic organizations, and states, who ought to employ their own experts. When we think of the little that has been accomplished, as compared with the enormous amount of work to be done, we cannot have too many experts in this country, and so I say the Federal Government ought not to do this work alone, but it has its own duties and responsibilities.

I want to say just a few words with reference to the mining industry as a whole, that our responsibility begins outside of the mines, and with the men who come to this country. I am delighted to see Dr. Steiner at this gathering, because of the large amount of most interesting work which he has done in going back and forth from one country to another, a steerage passenger, studying

these people in their homes in Europe, and on their way to this country, finding out their motives and their purposes, how long they expect to stay, and everything about them. It is a most interesting work, and work along a line we are very largely neglecting.

We must realize that of the seven hundred and fifty thousand people connected with coal mines in this country, less than 50% to-day are English speaking people. Probably 75% of them know very little about the laws or the customs or the principles or the underlying sentiment of this great country of ours. And what do we do with these people as they come here? We let them alone. They go and huddle together in their houses. Nothing is done to encourage them to become good, clean, earnest American citizens. I think one of the first things we ought to do is to look after these people when they arrive. We ought to have agencies for their distribution through the country. The quicker we can get them separated so they mingle with good American people the better for them and the better for us. The sooner we can provide good houses for them so they don't have to huddle together in a single small room, and provide baths for them, and other incentives to live as we believe good American citizens ought to live, the more rapid will be the improvement in behalf of safety, in behalf of hygiene, and every thing else that has to do with the betterment of this country. We are getting into a lot of trouble because of the fact that we leave these people to themselves. I believe the general welfare work which has been assumed by so many large companies to-day is one of the most encouraging developments in the industrial life of the United States. As I said last evening, I cannot speak with too high praise of the large corporations who are spending much of their surplus, in this work, for which they get very little public recognition.

When these people go to the mines there is where we have our big trouble. We hear a great deal about the mine disasters. We hear very little about the deaths which result in the mines one by one, and two by two and three by three, day after day. About three thousand men each year are killed in our coal mines and the other mines relating to them. Of these more than 50% are killed one and two at a time by falls of roofs, and falls of coal, and about 16% of them are killed by haulage equipment. About 15% only are killed in these larger mine disasters which we call mine explosions. We cannot expect to eliminate all accidents from our

large industries, but we ought soon to see the day in which it is not possible for one man, however willing he may be to kill himself, to kill a dozen others. That should be our first great aim; to protect the general safety and prevent general disasters.

We begin to find that about the only salvation, so far as gas is concerned, is to keep it out of the mine, and we are putting in enormous fans to-day to drive from one hundred thousand to four hundred thousand cubic feet of air a minute through our large coal mines. These very excessive drafts of air which are being put through the mines to drive out the gases and make them save from that cause, are, during all the months of cold weather, driving the moisture out of the mines so that the coal dust becomes exceedingly inflammable, and we have to-day more men killed by coal dust in this way than we have prevented men from being killed by gas.

Men tell us day by day we ought to sleep in the open air ourselves and more and more we are getting in the habit of sleeping with open windows and sleeping on open porches, in order to get this fresh air. We must not deny to the miner the fresh air we can find above ground. We must find, then, another remedy. We must put back into the mine the moisture which we drive out. I know a number of mines in Pennsylvania, which, at an initial cost of from $50 to $100 have arranged their steam pipes so the exhaust steam from their steam plants not only raised the temperature of the air as it entered the mine but also charged it with a sufficient quantity of moisture to produce throughout the winter season the natural sweat you have during the summer. You know very well if you put a pitcher of ice water in a current of air you find the dew forming on the outside of the pitcher. And so it is in the mine, coal dust which you could not wet by sprinkling it with water, is thoroughly permeated with moisture when the moisture goes through the mine under the conditions I have just described.

We found a few days ago in one of our experiments at Pittsburgh, we could not explode coal dust which had been exposed to this warm, moist air a few hours. That is an extremely simple remedy and I hope to see the day when accidents from that source will be no more.

But here is another trouble, and it illustrates how we have to keep our eyes open on this safety question. In the efforts a few years ago to sprinkle the mines thoroughly in Germany they found they were so greatly increasing the moisture that the hookworm disease

began to increase rapidly. When we both raise the temperature and increase the moisture during the winter season we are making a condition the most favorable possible for the development of the hookworm, and we have already found the hookworm in a number of mines in our southern states. But that again is a trouble that can be prevented, because the hookworm does not come out of the air, but it comes from certain germs and is due to unsanitary conditions in the mine, and, as "Cleanliness next to Godliness" is a cure for quite a number of ills, so cleanliness and sanitation in the mines will drive out the hookworm.

I mention these facts to illustrate how by applying one remedy we run into another difficulty, but, by following these difficulties up in one way or another we can improve the general situation.

What the Federal Government is trying to do is to conduct its investigations and find out what it can do, to get in touch with foreign governments and with great corporations like our steel corporation and ascertain what they have accomplished, and keep this information before the miners and mine operators. We are printing to-day a series of publications we call "Miners' Circulars." I took up with the leaders of the miners a question which interested me very much, as to whether or not we should print these in different languages, but the leaders of the miners took what may have been a broader view of the situation and they said "It is greatly to the interest of this country that every miner coming to the United States should learn simple English as soon as possible," and they believed it would be better on the whole if these circulars were printed in English alone, and printed in simple English, and I hope the experiment will prove a success, as we are all heartily in sympathy with the accomplishment of that great purpose of Americanizing the miners themselves. We are conducting investigations in regard to explosives that would be so quick in their flame that they would not ignite the dust and would rarely, if ever, ignite the gas, and it is interesting and encouraging to know that our experiment has exceeded our fondest hopes. You all know that in Germany and Belgium the governments have a right to say what explosives shall be used, but the Federal Government has no such authority. We can simply depend upon the good will of the miners and operators and the power of public opinion. So we said to the manufacturers of explosives: "We are going to make these tests and if your explosive won't pass these tests we won't say anything

about it, your competitors need not know about it, but if it passes we will print it on a list of explosives which, while we have no authority as the English Government has to say they are the permitted explosives, we will go just as far as we can to say they are permissible explosives." We have about one hundred explosives on that list, and the manufacturers have co-operated with us. If an explosive failed the manufacturer attempted to improve the same, and we continued to try it until one after another those that had previously failed would finally succeed in passing the test. Starting with nothing and with no authority whatever, the industry of permissible explosives and their use in the coal mines of the country has increased until last year we used nearly thirteen million tons of these explosives and one-third more than was used in Great Britain with a larger number of miners and with the authority of the government behind it. I mention that, as it is encouraging to see how quickly public opinion and the state inspectors are willing to co-operate with a thing when it is a good thing to be done.

We feel, therefore, that all our recommendations are based absolutely as to their success upon whether or not they ought to succeed, and so far as that is true it not only puts every expert connected with the Bureau upon his own resources, but it places the country in the position where I think it ought to be, to accept a recommendation simply upon its merits.

There comes a pretty big proposition when you talk about educating public opinion. We all realize how important public opinion is, and how important it is to educate public opinion, and, in my judgment, one of the greatest mistakes the large corporations are making to-day is that they are not coming forward and letting the public know the good work they are doing. The public being all powerful in a country like this, it should be familiar with everything of that kind. While I have great confidence in the average good sense of the average American citizen to-day to do the right thing, the possibility of his doing the right thing depends upon his having the information upon which he can base his actions. I say, then, every one of you gentlemen connected with corporate institutions ought to bear that in mind, that while you may accomplish wonderful things in the sphere of activity in which you are engaged, it is not a privilege but a duty to let the public know about it. We all talk about the man who blows his horn, and we all talk about

the virtue of the quiet man who, in his own way, goes out and does his duty. That is all right where the public welfare is not affected, but where a man makes a discovery, or where regulation or custom or practice is put in force which is of benefit, not only to himself but to his associates and to the public, let that be understood thoroughly.

I was greatly interested last evening after we left our banquet to read over a copy of the rules and regulations of the Illinois Steel Company which Mr. Campbell kindly gave me after the close of the address, and the general recommendations to the employees of that company struck me as being most admirable. The effort put forth by President Buffington to make every employee feel that he had certain duties to perform, not only to look after his own safety but to report every condition, whoever was responsible for that condition, the general manager, or anyone else, the humblest employee was requested to report that to headquarters and assured he would be protected in doing so. The most inspiring thing in this whole situation is the spirit of co-operation, and I am delighted to report that in the mining situation to-day I am finding the heartiest co-operation between the miners and the mine owners, and I hope we will also have the co-operation of the general public in being fair to both the miner and the mine owner. We absolutely refuse to have anything to do with arbitration or settling the difficulties between these two. We give them to understand that our own business, and only business, is to conduct investigations and get at the facts, and they must decide for themselves as to their responsibility in carrying out the facts which we have gotten out, or the recommendations which we see fit to submit. The Miners' National Organization has just appointed a committee of five, and the coal operators are appointing a committee of five, and I believe the metal mine operators will appoint a committee as soon as they are invited to, a committee to co-operate with the Bureau of Mines to go over the actual condition, and then their great work will be, on the one hand, to get the miner, and on the other hand to get the operator to co-operate in carrying out those details of safety. I believe the old adage that you can lead the horse to water but you cannot make him drink is true in all the general policies and principles and activities of a great country like this, and it ought to be so, but let us go to work and educate the miner and the mine owner and the general public to be active and to be fair and to co-operate one with the other. (Applause.)

WORK OF THE FEDERAL GOVERNMENT FOR THE PREVENTION OF RAILWAY ACCIDENTS AND ITS RESULTS

CHAS. C. MCCHORD, Commissioner, Interstate Commerce Commission
Read by H. W. Belknap

Railroad accidents, their causes, and the means for their prevention is a subject which has caused general discussion in this country for many years past; and not without reason. When we learn that during the twenty-four years covered by the statistics of the Interstate Commerce Commission 188,037 persons have been killed and 1,395,618 persons injured on the railroads of the United States, we are appalled at the magnitude of the slaughter. This is an average of 7,835 persons killed and 58,150 injured each year, or an annual total of nearly 66,000 persons killed and injured. This means that for every day during the past twenty-four years 181 persons have been killed or injured—nearly 8 every hour, or one every seven minutes, with the regularity of clockwork. The ravages of war pale into insignificance before these silent indications of the destruction of human life accompanying the peaceful operation of our railroads.

It is pertinent to inquire how much of this fearful record of slaughter is due to the unavoidable risk of the industry, and how much to causes that can be eliminated, as means for the prevention of accidents must obviously be directed to the latter causes.

Upon analysis of the above totals one cannot fail to be impressed by the surprisingly large number of trespassers they include. No figures pertaining to trespassers appear in the Commission's statistics previous to 1890, and as no returns of accidents to "other persons" were received by the Commission for the year 1910, owing to a change in the law requiring reports of accidents, we have a complete record of accidents to trespassers for only the twenty-year period 1890 to 1909 inclusive. This record is sufficiently startling. There were 163,171 persons killed and 1,190,125 injured during this twenty-year period. Of the number killed, 101,629, or more than 62% of the total, are classified as "other persons", that is, they were neither passengers nor employees, and of these 101,629 "other persons", 86,733, or more than 85%, were killed while trespassing. The trespassers killed during this twenty-year period

were more than 53 % of the whole number of persons killed on railroads.

Of the 1,190,125 persons injured during this period, 142,040, or more than 11%, were "other persons", and of this number 94,646, or more than 66%, were trespassers. The trespassers injured constitute less than 8% of the whole number of persons injured.

The following is a tabular presentation of these facts:

PERSONS KILLED AND INJURED IN RAILROAD ACCIDENTS DURING THE TWENTY-YEAR PERIOD 1890 TO 1909 INCLUSIVE

	Number Killed.	*Number Injured*
All classes	163,171	1,190,125
Other persons	101,629	142,040
Trespassers	86,733	94,646
	Per cent.	*Per cent.*
Other persons to all classes	62.2	11.9
Trespassers to other persons	85.3	66.7
Trespassers to all classes	53.09	7.9

In the five year period from 1905 to 1909 inclusive, 31,091 other persons were killed; 26,291 of these were trespassers. In the same period 49,786 other persons were injured, of which number 28,205 were trespassers. A significant feature connected with these figures is the surprisingly large number of trespassers killed by being struck by trains, locomotives or cars at "other points along the track." Of the 26,291 deaths to trespassers during this five-year period, 17,469 were due to this cause. The extremely fatal nature of this class of accidents is indicated by the fact that while more than 17,000 persons were killed less than 10,000 were injured, the deaths exceeding the injuries in a ratio of 1.76 to 1. It may also be noted that while more than 53 % of all the persons killed during the twenty-year period from 1890 to 1909 were trespassers, less than 8% of the total persons injured were trespassers.

Public attention for many years has been centered upon the question of abolishing grade crossings. While it is of course desirable that all possible precaution should be taken for the prevention of accidents at highway crossings, it is nevertheless true that the highway crossing casualties are extremely few as compared with those occurring at other points along the track. In the five-year

period above shown, 4,261 persons were killed at highway crossings, as compared with 17,861 persons killed at other points along the track; 8,830 persons were injured at highway crossings, as compared with 10,686 injured at other points along the track. Of the persons killed at highway crossings, 3,231 were non-trespassers and 1,030 were trespassers; of the persons killed at other points along the track, 17,469 were trespassers, while only 392 were non-trespassers. Of the persons injured at highway crossings, 7,540 were non-trespassers and 1,290 were trespassers; of those injured at other points along the track, 9,929 were trespassers and only 757 were non-trespassers. The casualties to non-trespassers at other points along the track are so comparatively few in number that they may safely be left out of consideration. It is probable that practically all of them occur to persons engaged in loading or unloading cars in railroad yards, and it is doubtful that persons engaged in such work can be surrounded with additional safeguards. When it is considered, however, that more than half of the fatal accidents on railroads in this country occur to persons who have no right upon railroad premises, it becomes apparent that there is a fertile field for reform in the method of dealing with trespassers. In England and on the continent of Europe walking on railroad tracks is forbidden by law, and it should be here; furthermore, vigorous measures should be undertaken to make people understand that railroad tracks cannot be used as footwalks with impunity.

Coming now to accidents to employees and passengers, we enter a field in which the federal government has displayed considerable activity, the result of which can be measured with a fair degree of accuracy. There are certain accidents which occur with more or less regularity and frequency on railroads that may properly be called unavoidable. Such are accidents due to exceptional elemental disturbances, entirely unexpected landslides or washouts, want of ordinary precaution on the part of passengers or employees, malicious tampering with roadway or equipment, etc. Such accidents are accepted as among the ordinary hazards of railroading and may be dismissed from our reckoning. We deplore the casualties which accompany such accidents, just as we deplore the loss of life that accompanies the destruction of a ship in a great storm at sea, but in the one case as in the other we know that no human foresight could have prevented the accident.

There are accidents, however, which are fairly preventable, and

against the occurrence of which travelers and employees on railroads have a right to demand protection. It is important, therefore, to determine the causes of these preventable accidents in order that proper measures for their prevention may be undertaken.

The safety appliance act of 1893 was the first attempt of the federal government to deal with railroad accidents. This law dealt with a class of accidents the cause of which was plainly apparent. The killing and maiming of employees through the use of link-and-pin couplers and drawbars of uneven height had been a crying evil for many years. Railroad journals had advocated reforms; state railroad commissions had discussed the question, and in some states laws had been enacted requiring the use of automatic couplers. But these state laws had made the situation worse rather than better, as they led to the adoption of different types of couplers for the different states, thus destroying the uniformity that is essential to safety where cars are universally interchanged as is the practice on the railroads of this country.

With this situation in mind the Interstate Commerce Commission, through its secretary, Mr. Edward A. Moseley, began its agitation in 1889 for the abolition of the death-dealing link-and-pin coupler, for a standard height of drawbar, for grabirons on cars, and for power brakes on locomotives and cars. Uniformity in practice was the urgent need and it was apparent that uniformity could not be obtained without federal legislation.

The first safety appliance act, passed March 2, 1893, made it unlawful after January 1, 1898, for any railroad engaged in interstate commerce to use on its line in moving interstate traffic any locomotive not equipped with a power driving wheel brake and appliances for operating the train brake system, or to run any train in such traffic that had not a sufficient number of cars in it equipped with power brakes so that the engineer could control the speed of the train without requiring brakemen to use the common hand brake for that purpose. The purpose of this requirement was to reduce the number of injuries and fatalities caused by men falling from the tops of cars or being struck by overhead obstructions while using the hand brake. The act also made it unlawful to use cars not equipped with couplers that would couple automatically by impact and which could be uncoupled without the necessity of men going between the ends of the cars. It was further made unlawful after January 1, 1895, to use in interstate commerce cars

not provided with secure grabirons on their ends and sides. Carriers were authorized to refuse to receive cars not lawfully equipped. The American Railway Association was authorized to prescribe a standard height for drawbars, which was to be legalized by an order of the Commission.

Owing to the prompt action of the American Railway Association, the Commission was able to announce the standard height of drawbars one month after the passage of the act. The time limit for compliance with the brake and coupler provisions was twice extended, so that the law did not become fully operative until August 1, 1900. Experience soon demonstrated the need of amendment, as the requirement that a "sufficient" number of cars should be equipped with train brakes to insure control proved too indefinite to be enforceable. To remedy this defect an amendment to the act, approved March 2, 1903, provided that a minimum of 50% of the cars in a train must be so equipped, and the Commission was given power to increase this number from time to time. It was made 85% on September 1, 1910, and so remains.

Further experience with the law demonstrated the need of an extension of its provisions to cover all the appliances included in the Master Car Builders' standards for the protection of trainmen, as there was such a lack of uniformity in the design, location and methods of applying certain of these appliances as to make them a source of danger to employees. To meet this difficulty, therefore, a supplemental act, passed April 14, 1910, requires the equipment of cars with secure sill steps, ladders, running boards, efficient hand brakes, and grabirons on the roofs of cars. The Commission was required to designate the number, dimensions, location, and manner of application of these appliances within six months from the passage of the act, the provisions of which became effective on July 1, 1911. The Commission was also empowered to extend the time for compliance with the provisions of the act with respect to equipment of cars actually in service on the date of its passage. As a result of numerous conferences and hearings, the Commission, on March 13, 1911, issued an order designating in detail the number, dimensions, location and manner of application of all appliances covered by the act, and a further order extending the time for compliance with its provisions with respect to cars actually in service on July 1, 1911. Speaking generally, these extensions range from one to five years, except that when a car is shopped for

extensive repairs at any time before the expiration of the period of extension, it must be made to comply with the prescribed standards.

What have been the results of this legislation? To secure its enforcement the Commission in 1899 appointed an inspector to examine railroad equipment. Aided by Congressional appropriation, this practice has been extended until the inspection force now numbers 31 men. This inspection was recognized as a necessity, as the protection contemplated by the law demanded that the appliances it required should not only be supplied, but that they must also be kept in workable condition. Recognizing its remedial character, the courts as a rule have placed a liberal construction on the provisions of the law, and as a result of this, coupled with careful and efficient methods of inspection, great improvement in the condition of safety appliance equipment has resulted.

The year 1904 is the first one for which we have a complete record of the results of inspection. In that year the number of cars found defective in every 1,000 cars inspected was 311.87. In 1911, however, only seven years later, the situation had so much improved that of every 1,000 cars inspected only 44.63 were found defective, a reduction of 267.24 in the number of defective cars inspected, or more than 85%, in this comparatively short period.

This improvement in the condition of safety appliance equipment quite naturally brought about a corresponding decrease in the number of those accidents to employees which the use of the appliances was designed to prevent. In the year 1893, for instance, the number of employees killed in coupling accidents was 433 and the number injured was 11,277. The number per million equipment then was 333 employees killed and 8,675 injured in coupling accidents. The total equipment in the year 1893 was 1.3 millions, but .3 million of which was equipped with automatic couplers. In 1911, with 2.4 millions equipment, all of which had automatic couplers, 209 employees were killed and 2,966 injured in coupling accidents, an average of but 87 killed and 1,236 injured per million equipment, thus showing a reduction from 11,710 to 3,175 in the total of deaths and injuries from this cause, or a decrease of nearly 73%. The showing per million equipment, as might be expected, is even better, the deaths and injuries on this basis being reduced from a total of 9,008 in 1893 to 1,325 in 1911, or more than 85%. This decrease in coupling accidents is even more favorable than it

first appears, for it has taken place coincidentally with an expansion of business which has resulted in the crowding of tracks and terminals and the use of heavier equipment and longer trains, thus introducing additional elements of risk. This additional risk is indicated by the following figures:

In 1893 the number of tons carried on the railroads of the United States was 745,119,482; in 1911 the number was 1,781,638,043, an increase over 1893 of 1,036,518,561 tons. The number of tons carried one mile was 93,588,111,833, in 1893, as against 253,783,701,839 in 1911, an increase of 160,195,590,006 ton miles. With this increase in traffic came a relative decrease in the number of men directly employed to handle it. The number of trainmen employed by the railroads in the United States in 1893 was 146,544, and in 1911 it was 221,426. The average number of tons in a train in 1893 was 184; this had increased to 383 in 1911, or more than 100%. The number of tons carried for each trainman employed in 1893 was 5,085; in 1911 it was 8,046, an increase of 2,961 tons per man. The number of tons carried one mile for each trainman employed increased from 638,635 in 1893 to 1,146,133 in 1911. This increase was effected notwithstanding there was a decrease in the number of train miles run for each trainman employed, the figures being 5,764 in 1893 and 5,589 in 1911. These facts appear in tabular form as follows:

	1893	1911
Number of tons carried.....	745,119,482	1,781,638,043
Number of tons carried one mile..	93,588,111,833	253,783,701,839
Average number of tons in train..	184	383
Number of trainmen employed....	146,544	221,426
Numebr of tons carried for each trainman employed.....	5,085	8,046
Number of tons carried one mile for each trainman employed....	638,635	1,146,133
Number of train miles run for each trainman employed.....	5,764	5,589

In the light of the record it may safely be asserted that, considering the accidents to employees which the coupler and air brake laws were designed to prevent, the greater part of those which now occur are due to the ordinary hazards of the railroading industry. It is also proper to observe that the use of these appliances, in addition to so greatly reducing accidents to employees,

has brought abundant returns to the railroads in economies of operation. Not only is time saved in the make-up and movement of trains by the use of the automatic coupler and air brake, but it is also certain that the great economies of modern transportation that have resulted from heavier equipment and longer trains would have been quite impossible of realization without the use of the appliances prescribed by the safety appliance acts.

Leaving those accidents the causes of which are plain and against the occurrence of which the law seems to have provided efficient safeguards, we come to a class of train accidents upon which public attention has been centered for many years but which continue to occur with distressing frequency in spite of all measures thus far taken to prevent them. Collisions and derailments were responsible for 4,163 deaths, 63,002 injuries, and a property loss of $50,025,303 during the five-year period 1907 to 1911 inclusive. The number of collisions and derailments during this period, as reported by the Interstate Commerce Commission, was 61,806. No road can claim immunity from these accidents, as they occur on the best equipped and best managed roads quite as frequently as on roads less well managed or equipped. Moreover, there is a dreary monotony in the sameness of the reported causes of these accidents. Year after year derailments and collisions due to identical causes are reported.

For the purpose of obtaining reliable data regarding the causes of these accidents, Congress enacted a law in 1901 requiring interstate railroads to make monthly reports under oath to the Interstate Commerce Commission of all collisions and derailments, giving the nature and cause of the accidents and the circumstances connected therewith. It was expected that through the reports required by this law the causes of the accidents reported upon would be revealed and proper remedies for their prevention clearly indicated. Under the law the Commission has published a series of quarterly bulletins based upon the monthly reports received from the railroads. The publication of these bulletins began with the quarter ending September 30, 1901, and the bulletin for each subsequent quarter until June 30, 1911, contains detailed accounts of the more prominent train accidents, with a statement of their causes as reported by the railroad companies. Since July 1, 1911, the bulletins have reported the causes of collisions and derailments under another law which will be later referred to.

The publication of these bulletins quickly brought into promi-

nence the weakness of the personal equation in railroading, showing that by far the greater number of these harrowing train accidents were due to human error. The bulletins show that errors in the operation of the train order system are frequent and fatal. Such errors are all of a kind. Dispatchers give wrong orders, or fail to give orders where they are required; operators fail to copy orders correctly, or do not deliver orders that should be delivered; conductors and enginemen misread, misinterpret, overlook or forget orders.

This weakness of the train order system of operating trains, as disclosed by the Commission's accident bulletins, gave impetus to agitation for the compulsory use of the block system. In its annual report for the year 1903 the Commission recommended such legislation and submitted a draft of a tentative bill requiring the use of the block system on all interstate lines within a certain period. A bill following the suggestions of the Commission was introduced in Congress in the winter of 1905, and has been reintroduced at every subsequent session, but has not yet been enacted into law. In the meantime, the block system has been considerably extended, the block signal mileage reported for the year 1911 being 76,409.7 miles as against 48,743.2 miles in 1906.

However, notwithstanding the theoretical merits of the block system as a means of safety, it by no means insures immunity from collisions. Some of the worst collisions noted in the accident bulletins have occurred on block signaled roads. Obviously, the block system can only afford protection when its danger warnings are observed and obeyed. The intensity of attention and quickness of perception required of enginemen on our modern, high-speed trains leads to the result that they sometimes fail to observe or obey signal indications, and when this happens, disastrous consequences are almost sure to follow. In the operation of the manual block system also, block operators sometimes make mistakes which lead to fatal results.

Noting these disasters due to human error, under the most highly approved system of train operation, the question naturally suggested itself: "Is it not possible to employ mechanical means that will automatically assume control of a train and bring it to a stop whenever a danger signal is for any reason disregarded"? Automatic stops had been in successful operation for several years on underground and elevated lines, but their general use on roads in

the open country was not considered practicable. To determine the general practicability of such devices, therefore, Congress, in 1906, directed the Commission to conduct an investigation, accompanied by experimental tests, of appliances for the automatic control of trains. To comply with the direction of Congress, the Commission appointed a board of experts which conducted an investigation extending over a period of nearly five years. Plans and specifications of numerous automatic train control devices were examined and reported upon, and tests of several such devices under actual operating conditions were made. Reports stating the results of the Board's investigations were issued annually. The last of these reports, issued December 26, 1911, states that "the information obtained from tests, together with knowledge of the general state of development of the art of automatic train control, leads the Board to conclude that there are several types of apparatus and methods of application, which, if put into use by railroads, would quickly develop to a degree of efficiency adequate to meet all reasonable demands. Such devices properly installed and maintained would add materially to safety in the operation of trains. In many situations, under conditions existing in this country, the Board is convinced that the use of automatic train stops is necessary to the safety of trains."

Another matter made prominent by the accident bulletins was the long hours of service to which train employees were subjected. Accidents were reported in the bulletins where the employees involved had been on duty an excessive number of hours, and it seemed apparent that such accidents were largely contributed to, if not directly caused, by excessive periods of service. Could events be traced to their first cause it would doubtless have appeared that many of the reported cases of misreading, overlooking or forgetting orders were also due to the fact that wits were dulled and senses benumbed by lack of rest.

When the facts in this situation became sufficiently prominent, Congress took prompt action, and on March 4, 1907, a law was passed limiting the hours of labor of trainmen and telegraph operators. The law became effective one year from the date of its passage, and has been enforced by the Commission with the aid of a force of inspectors which now numbers six men.

Whether the enforcement of the hours of service law has resulted in any increase of safety in train operation it is impossible to say,

as a statistical presentation of results cannot be made. That the law has been of great benefit to employees, however, is certain. No longer do we hear of trainmen being kept on duty 40, 50 or 60 hours in the ordinary process of moving their trains over a 100-mile division of road. Such excessive periods of service, which were formerly quite common, are now only met with in those extraordinary emergencies which furnish a legitimate and excusable reason for excess service. As a result, there can be no doubt that the efficiency and morale of railroad train service has improved. Furthermore, the economic result of the law's operation is believed to be of benefit to the railroads. Trains are moved over the road in less time than formerly, and the number of train miles run for each trainman employed has considerably increased since the law became effective. This increase is especially significant in view of the fact that there was a steady decrease in this item for a number of years previous to 1908, the figures being 5,764 train miles run for each trainman employed in 1893, which had been reduced to 5,420 in 1908. In 1911 the number was 5,589, showing an increase of 169 miles as compared with 1908. The number of tons carried for each trainman employed was 7,358 in 1908 and 8,046 in 1911, an increase of 688 tons. The number of tons carried one mile for each trainman employed was 1,048,238 in 1908, and 1,146,133 in 1911, an increase of 97,895 tons in this item. On the whole, therefore, it would seem that the economic results under the operation of the law have been satisfactory.

Experience with the accident report law soon developed the fact that its underlying purpose, which was to secure accurate information respecting the actual cause of train accidents, could not be accomplished by relying upon the reports made by railroad managers. Railroad officials often seemed to think it their duty to withold essential facts on account of some real or fancied liability that might impair the company's rights or interests in future court proceedings. Some companies seemed to have adopted a settled policy of furnishing the least possible information on all matters connected with accidents on their lines. Moreover, it was found impracticable to formulate a code of questions that would elicit satisfactory answers by letter in cases where the cause of a collision or derailment was at all complicated or obscure, or where the responsibility was chargeable to two or more persons. In such cases cross-examination is necessary to get at the true facts.

It became apparent, therefore, that independent investigations, conducted under authority of the federal government, were necessary to develop the true facts, and after an agitation extending over a period of six years a law authorizing such investigations was placed on the federal statute books on May 6, 1910.

This law empowers the Commission to investigate all collisions, derailments or other accidents resulting in serious injury to persons or to the property of a railroad engaged in interstate commerce. This provision is in addition to the requirement that carriers shall make report of all accidents monthly, on forms prescribed by the Commission, which remains as in the law of 1901. The Commission is authorized to employ any impartial investigator to inquire into all the facts, conditions and circumstances surrounding any accident investigated, and is clothed with ample authority to get all the facts.

Investigations under this law are made by the Commission's safety appliance and hours of service inspectors, under the direction of the chief of the division of safety appliances, and reports showing the causes of accidents investigated are made to the Commission by the chief of the division of safety appliances. These reports are summarized in the quarterly accident bulletins, such summaries taking the place of the detailed reports of important accidents which are published in the bulletins under the law of 1901, publication of which was discontinued on June 30, 1911.

Investigations under this law began in June, 1911, and up to date 85 accidents have been investigated and reported upon by the various inspectors. The chief of the division of safety appliances has submitted his reports to the Commission on 72 of these accidents, and 53 have been summarized in accident bulletins 41, 42 and 43. Detailed reports of the more important accidents investigated have been printed as separate documents by the Commission.

In the investigation of a number of prominent accidents involving the failure of rails, the resources of the Bureau of Standards of the Department of Commerce and Labor have been utilized. This bureau is well equipped with facilities necessary for making tests of the physical and chemical properties of rails, and its Engineer-Physicist, Dr. Howard, is one of the most capable rail experts in this country. The aid rendered by the bureau has been of much service in disclosing the underlying causes of serious rail failures. The examinations made by Dr. Howard have been painstaking and

thorough, and the conclusions reached by him have the weight of authority.

Coming now to the causes of the accidents that have been investigated under the terms of this law, we find many instances of bad practice and are able to indicate certain unsafe methods of operation which should be changed. The investigations have not yet proceeded far enough to indicate the need of any specific legislation other than that which has already been proposed, but they have confirmed the need of a law for the compulsory use of the block system, and for the use of automatic stops in certain situations, as also for a uniform code of signals and rules, a bill providing for which has already been introduced in Congress.

The inherent weakness of the train order system appears from the fact that of 47 collisions investigated, 23 were due to failure of conductors or enginemen to understand or obey orders; mistakes of dispatchers or operators in issuing, transmitting, copying or delivering orders; forgetting or failing to keep clear of superior class trains; misreading watches, and improperly checking train register. These identical errors have been the cause of collisions with more or less frequency throughout all the years the train order system has been in operation. They occur under both the double and single order system, as well as with the intermediate order, and are inevitable wherever absolute reliance is placed upon the human element. It is universally admitted that the defects of the train order system cannot be cured by any improvement in the details of its operation. The only certain remedy is some form of block system that will insure the maintenance of an interval of space between moving trains.

But, as previously noted, collisions also occur under the block system. Such accidents in most cases are due to improper flagging or to failure of enginemen to observe or obey signals. Occasionally, where manually operated signals are in use, collisions are caused by mistakes on the part of signalmen. In short, collisions under the block system are due to the same fundamental cause as under the train order system, namely, human error. From the standpoint of safety, the block system is superior to the train order system only because it presents fewer opportunities for men to make mistakes.

To prevent collisions, therefore, we must reduce the chance of human error to a minimum, and introduce measures to neutralize

its effects when it does occur. This is a trite conclusion, but it is sometimes necessary to re-state a truism in order that the importance of a too familiar fact may be made prominent. To reduce the chance of human error in the operation of trains is a problem that has occupied the attention of railroad managers for many years. Rules innumerable have been formulated with this end in view, and various disciplinary measures have been undertaken for the enforcement of such rules. But the results have not been entirely satisfactory. Why? Mainly because the rules, as well as the disciplinary measures for their enforcement, have too often been mere makeshifts. Rules have been violated with impunity, with the full knowledge of officials whose duty it was to enforce them, and disciplinary measures have been applied only in cases where disaster has followed disobedience. The crying need in railway service today is a sensible and entirely workable code of rules governing the operation of trains; a code that can be obeyed under all conditions of operation; a code the primary purpose of which shall be the prevention of accidents rather than the avoidance of legal responsibility for their occurrence.

The remarkable increase in speed and weight of trains within recent years, and the crowding of tracks and terminals caused by movement of the enormously enlarged volume of railroad traffic, have greatly increased the duties of employees and multiplied the chances of error on their part. Rules which a few years back were perhaps reasonable and proper can no longer be observed and comply with the demands of traffic. Many such rules have remained in force although it is well known that they are honored more in the breach than in the observance of them. Such a condition cannot fail to weaken respect for all rules and render really effective discipline impossible. Whenever it becomes the unwritten law on a railroad that schedules must be maintained and trains moved over the road regardless of rules that have been enacted to secure safety, the conditions of disaster on that road are ever present and its managers are gambling with fate. A terribly disastrous, head-end collision, caused by a train approaching a meeting point for another train at excessive speed, was due to disobedience of a rule requiring the air brakes to be controlled from the leading engine of a double-header. At the investigation of the accident the trainmaster of the railroad testified that this rule was habitually disregarded with his full knowledge. He also said that a rule which

required all trains to make a running test of air brakes was not expected to be obeyed except by passenger train crews.

Excessive speed as a factor in train accidents deserves serious consideration. A number of derailments investigated were directly due to speed too high for the existing conditions of track or roadbed, and in several serious collisions high speed was an important factor. It is, of course, extremely difficult, if not impossible, to say absolutely what is a safe limit for the speed of trains. With heavy rails, well maintained track and roadway, properly spaced signals, and track kept clear of slow trains, high speed trains can be run with comparative safety. But the effort to maintain the schedules of these fast trains, and to bring them in on time, creates an undesirable mental condition and increases the chances of mistakes by employees. In a collision involving a high speed passenger train upon one of our best equipped and operated railroads the towerman at an interlocking plant lined up the switches for a freight train to make a crossover movement, the fast train coming from the opposite direction being several minutes late. Before the freight train movement had been completed the fast train approached and whistled for a clear track. In his anxiety to facilitate the passage of the fast train, the towerman forgot that the switches were lined up for the freight train and changed them so that the fast train might proceed. The towerman was clearly responsible for the resulting collision, but behind his mistake there was the anxiety that there should be no delay to the fast train, a mental condition which affects all employees in greater or less degree.

This mental condition, this desire to bring the fast train in on time at all hazards, leads to the disobedience of many rules, and such disobedience is often winked at by the very officials whose duty it is to enforce the rules. Trainmen are thus encouraged to take dangerous chances, knowing that if they come through without accident their infraction of the rules will be ignored. It thus happens that most of the accidents to high speed trains are directly caused by failure of some employee to perform his duty. Many such accidents occur through failure of enginemen properly to control speed at dangerous points. In the rear-end collision on the Illinois Central at Kinmundy, Ill., on January 22, 1912, the standing train was struck at a speed of at least 30 miles per hour although a speed limit of 10 miles per hour for all trains was in force through the station limits at Kinmundy.

Failure of railway officials to determine with scientific accuracy the limits of safety, especially with respect to speed on curves, no doubt has led to many derailments. There are no accurate engineering data showing the actual stresses which are set up in railway track structures by locomotives and cars of different weights and moving at different rates of speed. That an enormous strain is placed upon track by our heavy, modern trains, hauled by engines weighing upward of 200 tons, at 60 miles or more per hour, is beyond question. There is urgent need for accurate information on this point.

In a number of derailments, investigation showed that track conditions were unsafe for the movement of trains at even ordinary speed, and no adequate measures had been taken by those in authority to insure speed reductions. This condition is by no means confined to the less prominent roads where no special effort is made to run trains at phenomenal speed, but has also been found on the more prominent roads in connection with the most widely advertised, high speed trains in the country. It is apparent, therefore, that both collisions and derailments can be materially reduced by the introduction of adequate measures for the enforcement of speed restrictions where conditions demand it.

Investigation of derailments due to broken rails has developed the fact that current specifications for the manufacture of rails are not adequate to guard against the most common type of fractures, and that the drop test does not reveal the presence of interior defects of a serious character. There is urgent need of reform in the requirements of the specifications, as well as in the methods of inspection at the mills, so as to insure that structurally sound rails will be obtained. This need is particularly urgent in view of the constantly increasing strains to which rails are subjected, due to increase in the weight and speed of trains.

The superiority of the steel car, from the standpoint of safety, has been confirmed by the results of investigations, both with respect to collisions and derailments. Antiquated wooden cars have been totally destroyed, with serious results in loss of life and injury to persons, in accidents less severe than those involving steel cars, the occupants of which have escaped practically unscathed. The steel car is rapidly superseding the wooden car on practically all the prominent roads, and it may safely be predicted that unnecessary injury and loss of life in collisions and derailments, by reason of

the use of antiquated and structurally unsound cars will soon be a thing of the past.

Numerous accidents due to the explosion of locomotive boilers led to agitation for a law providing for federal inspection of the boilers of locomotives used in interstate commerce, and such a law was enacted and received the approval of the President on February 17, 1911. This act makes it unlawful from and after July 1, 1911. for any common carrier to use a steam locomotive in interstate commerce unless the boiler of such locomotive and the appurtenances thereof are in proper condition and safe to operate. The act also provides for the inspection of boilers, and authorizes the appointment by the President of a chief inspector, two assistant chief inspectors and the employment of 50 district inspectors. The chief inspector is directed to divide the territory of the United States into 50 inspection districts and to assign an inspector to each district. Provision is made for the establishment of a code of rules and instructions for the inspection of boilers. The rules are to be approved by the Interstate Commerce Commission, and the chief inspector is required to make annual reports to the Commission, as well as special reports covering the details of any accident that may have been caused by failure of a locomotive boiler or its appurtenances, whenever called upon by the Commission.

As soon as practicable after this law became effective, the chief and assistant inspectors provided for were appointed by the President, and the fifty district inspectors were selected through competitive examination conducted by the Civil Service Commission.

Rules and instructions for the inspection and testing of locomotive boilers and their appurtenances were formulated by the chief inspector and adopted after approval by the Interstate Commerce Commission, after a hearing at which parties interested were represented, as provided by the law. These rules and instructions were promulgated by the Commission in a formal order dated June 2, 1911, and became effective July 1, 1911.

This law has not been in operation long enough to enable any statistical statement to be made concerning its effect in reducing the number of boiler explosions. There can be no doubt, however, that the law has had a good effect in enforcing better attention to the condition of boilers, and in retiring from service many boilers which did not meet the established standards of safety. The first annual report of the chief inspector will shortly appear and this will

no doubt contain information of value demonstrating the benefits of the law.

We have now passed in review the various measures taken by the federal government for the prevention of railroad accidents, with the results of their operation so far as known. No specific cure for these disasters can be offered, for none is at hand. Experience has shown, however, that the number and severity of railway accidents can be materially reduced by the introduction of methods and appliances which are entirely practicable, and it is particularly encouraging to note that there has recently occurred a general awakening among railroad managers and railway trainmen's organizations which has led to a well organized movement on the more prominent railroads of the country to secure greater safety.

In the working out of this problem of greater safety on railroads we shall get no aid from a study of the railroads of other countries. Our problem is essentially peculiar to this country, and must be solved in the light of conditions existing here. The most difficult and perplexing factor in this problem is the personal equation. The failure of the man at the critical moment is the thing to be guarded against. and this involves generally a reformation in methods of discipline and rules of operation.

The publication of reports of accidents investigated by the federal government acts as a powerful tonic on the whole situation, as shiftless methods which endanger life and property cannot long endure in the light of merciless publicity.

Great possibilities in the direction of a solution of the problem lie in the organization of so-called safety committees. These are now features in the administration of many prominent roads, and the slogan "safety first" has become a watchword in the details of their operation. In making safety the dominant idea in the minds of employees, by continually talking about it and pointing out methods for its attainment, and important step in the right direction is taken. It is necessary for the employee to think right before he can act right. These safety committees are also bound to be an important factor in reawakening in employees that old-time feeling of personal interest and pride in the record of "our road" that has been so largely dissipated by modern railroad development. In short, co-operation for definite results all along the line is bound to result from the well directed efforts of these committees.

INDUSTRIAL FIRST-AID BY THE AMERICAN RED CROSS

By Dr. M. J. Shields, M. R. C. U. S. Army.
Field Representative American Red Cross

Before presenting this paper to your honorable body I take the liberty of announcing that I am here merely as a representative in the form of a substitute for a man, much more fitted in every conceivable way to represent so magnificent and humane an institution as the American Red Cross. I refer to Major Charles Lynch of the Medical Corps of the U. S. Army, a man recognized as an authority not only in all problems pertaining to military organization, sanitation and technical medical aid to the sick and wounded soldiers, but in industrial first-aid, to which cause he is devoting his life. It is to be regreted that so eminent a scientist and humanitarian as Major Lynch could not be present in person, but as certain national and international Congresses of great importance to the physical and moral welfare of people of this Nation and the world are at this time demanding his attention we all must content ourselves with the knowledge that he is with us in spirit if not in person.

When we, as Americans, take up a movement we try to break the speed limit, and meetings of this character and Congresses of conservation are just now overlapping each other. I shall endeavor to inform you on what has been accomplished by the American Red Cross First-Aid Department to the best of my limited ability.

The subject of accidents is at best an unpleasant subject to discuss, and my limited oratorical gift will hardly serve to make it an attractive essay before this distinguished gathering, but the subject on the other hand is so humane that it must, in itself, compensate for my shortcomings.

As many of you are undoubtedly aware the First-Aid Department of the American Red Cross was organized January 2, 1910. The work is administered through an advisory committee of such distinguished persons as John Hayes Hammond, John Mitchell, Julius Krutschnitt, W. G. Lee, Dr. Jos. A. Holmes, Professor H. H. Stoek, Captain W. A. May, Carl Scholz, Miss Mabel T. Boardman and several other names, representing railroad, mining and industrial interests, and philanthropic institutions such as the Y. M. C. A., Y. W. C. A. and the Boy Scouts.

When the First-Aid Department was first organized I was asked to become its field representative, probably because of my having been one of the pioneers in this work in the anthracite field. My first class received instruction as early as 1899. After having accepted service in the American Red Cross early in January, 1910, I visited mining camp after mining camp, working at times in co-operation with mining engineers representing what is now known as the U. S. Bureau of Mines, and others representing the Industrial Branch of the Y. M. C. A. and gave lectures and demonstrations in first-aid. We were very successful in getting both employer and employee interested to the extent that permanent first-aid corps were organized in such mining regions as Western Pennsylvania, West Virginia, Tennessee, Kentucky, Alabama, Oklahoma, Colorado, New Mexico and Washington. December, 1910, the Red Cross received a donation of a specially fitted car from the Pullman Company, for the purpose of carrying first-aid instruction wherever rails could carry this traveling school. And indeed a traveling school it is, for in addition to suitably arranged compartments for teacher and attendants' living purposes, the main portion of the car is a specially equipped first aid-lecture room. October, 1911, the Red Cross, by purchase, duplicated this equipment so that it now commands two traveling first-aid schools.

As regards the working personnel of the first-aid department Major Charles Lynch of the regular army medical corps and three field representatives embrace the medical personnel. Of the latter two surgeons are permanently attached to the cars, and one doing special work in the mining regions. During 1911 we co-operated with the U. S. Bureau of Mines in its splendid campaign carried on with seven mine rescue cars, and, through the courtesy of Professor Stoek, aided in the first-aid training of the personnel who now man the mine rescue stations and cars of the Illinois Mine Rescue Commission.

Since the Red Cross instruction cars have been put in commission they have covered about 6,500 miles, which includes the Rock Island system, Ill. Central, all of the Harriman lines, the Santa Fe, Northern Pacific, N. C. and S. L., Big Four, part of the C. & N. W., Lake Shore, in the west and south, the N. Y. C., Lackawanna, Erie, B. & O., B. R. & P. and Jersey Central in the East.

If we realize that these methods of instruction, during the past two and a half years, have reached an aggregate of about 250,000

individuals, including railroad employees, miners, policemen, firemen laborers and others frequently thrown on their own immediate resources in case of accident or injury, it must be admitted that the Red Cross first-aid department has had a fruitful career so far. To this must be added that lectures have frequently been given in public schools and other educational institutions.

The question presents itself: Does first-aid instruction pay; and if so, who is principally benefited thereby? Of course, safety and the prevention of accidents is the best first-aid in the sense that prevention is better than a cure; but accidents will occur in spite of all known precautions, and it is the unfortunate who has been hurt who receives the immediate benefit, for not only is pain at once alleviated, but under proper first-aid treatment the time of cure will be shortened all the way from ten to sixty days, and occasionally a human life saved

First-aid, properly applied, means untold benefit to the surgeon and the hospital, for they get a cleaner wound and a stronger patient, thus avoiding serious processes of long drawn out, often fatal forms of infection and suppuration, resulting in invalidism and deformity. On the other hand, the employer necessarily experiences tremendous benefits, though these are ordinarily not fully appreciated.

Conservative statistics show that from 66 to 76% of all accidents are avoidable. We, who have made a special study of accidents and their causes, know that it is either the very ignorant and green, or the expert and old employee that gets hurt, and where first-aid help has been organized for any previous length of time, it has been observed that it has made the expert employees not only more careful in regard to their own hurts, but that they have proven the means of caution even to the less experienced co-workers.

We know also, that it is not the green brakeman that pulls over the "knuckle" with his hand, or the new switchman that shoves over the draw bar with his foot, just as the cars are about to be coupled, nor the green lineman that climbs up the pole and handles high tension wires as if they were clothes lines, or the new miner who blows up a mine, but it is the old experienced man who is so experienced that he has gotten in a way immune to danger, and does things without thinking.

Thus, for example, one mining corporation reports a reduction as follows: Before the introduction of first-aid one fatal accident

occurred to every 90,000 tons of coal mined; one year after the introduction of first-aid one fatal accident to every 150,000 tons of coal mined; two years after one to every 190,000; three years later one to every 240,000 tons. The chief surgeon of one of the largest coal companies in the world states it in this way:

Before first-aid 84 deaths to six million tons mined; after eight years of first-aid 82 deaths for eleven million tons mined, and in both cases a corresponding reduction of accidents and complications as their sequelae.

Hospitals in the vicinity of Scranton, Pa., where first-aid is obtained for the last twelve years, report fewer amputations after compound fractures, a tremendous reduction of infected wounds, and the time in the hospital a great deal shorter than before first-aid.

Of course, I am quite ready to admit that statistics based on a man per ton calculation are not as accurate as a combination of tonnage, number of employes, hours of work and wages earned, a method of figuring adapted by the B. and O. safety department, nevertheless, the value of the other methods of collecting statistics should not be underrated.

You will, of course, appreciate that a wound in a mining or industrial accident is naturally a dirty one, which, if left unattended until medical services can be obtained, will become seriously infected and this holds especially good for the so-called slight wounds, such as bruises, and scratches. Properly dressed or treated immediately after the injury occurred has meant in the great majority of instances an avoidance of such serious consequences with the resulting loss in time and labor.

In the brief space of time allotted me I will endeavor to sketch hurriedly for your consideration, a scheme of inauguration of first-aid instruction, method of training and maintainance of trained personnel in a high state of efficiency.

Mining corporations should divide their territory into certain districts, each headed by a superintendent, who must arrange for a suitable hall, centrally located, for the convenience of all employes in the district concerned as a meeting place. The hall should be large enough to enable training in transporting wounded and injured on stretchers. Select the most intelligent workers at the rate of one to twenty totally employed.

Employees selected along the following lines: Men who are in and about the mines all day; men so selected as to have a first-aid

man in each section of the workings; several outside men, and especially the driver of the ambulances; men either too old or too young; men who stay with the company and not transients, and *intelligent* foreigners. This to include all classes of employees, namely, inside and outside foremen, fire bosses, driver bosses, engineers, pump runners, breaker employees, miners and laborers.

On railroads the organization could be along the same lines as regard to the selection of employees. One employee out of twenty should be trained, and should include conductors, engineers, trainmen, shopmen, crossing-watchmen, section-men, station-employees, and especially men employed on the wrecker and belonging to a wrecking crew. With the conductors, trainmen, and wrecking crews, a knowledge of first-aid should be made obligatory, as one railroad I know of is now doing, and they intend to make first-aid a part of the examination for the promotion of trainmen. I think that each train-crew should have at least one trained man. With the other class of employees, it should be perhaps at present voluntary or semi-voluntary with an inducement in shape of merit-marks held out. Corps should be organized at all principal terminals, engine-houses and shops. The men selected or invited to join these corps should not be transient or "boomers", but men who stay with the Company.

Steel plants, mills, furnaces and similar industrial establishments could organize First Aid on the same general lines, changed in some details to suit local conditions, but always remembering to have a competent First Aid man in every part of the plant, especially where the motive power is electricity.

Each corps should have a President, Vice-President and Secretary, who administer its affairs under the general direction of the Company. Lectures should be given by the medical director or surgeon in charge, and should not be over thirty minutes, illustrated by charts or maniken, actual bones, X-ray photographs, etc. After the lecture the men can be divided in teams of five and then each team or group select one of their number as a subject and be given an imaginary injury to treat. The surgeon-instructor inspecting the work, correcting errors and carrying on a quiz. The meeting should end with a general discussion of, we will say, recent accidents, of how First Aid was rendered, etc. The meeting should not last longer than an hour and a half. The material used in the practice drills should be very simple and consist of roller and triangular bandages,

First Aid packets, splints and cotton. A proper stretcher and materials for making a temporary stretcher should be at hand. This material can be used a number of times in practice with special injunctions not to use it for real accidents.

The following is a suggestive course that covers a period of one year, which is outlined in the American Red Cross First Aid Text Book, Industrial Edition:

1. Structure and mechanism of the body.
2. First Aid Materials.
3. General directions for rendering First Aid. Shock.
4. Injuries without the skin being pierced or broken.
5. Injuries in which the skin is pierced or broken.
6. Local injuries from heat, cold, and electricity.
7. Unconsciousness and poisoning.
8. Handling and carrying of the injured.
9. Special injuries of mine and railroad, etc.
10. Lecture by an expert on means for preventing accidents.
11. General review.
12. Sanitary matters, prevention of contagious diseases, such as tuberculosis, typhoid, scarlet fever, etc.

Along the line of simplicity and practicability, just as few and as simple dressings as possible should be used in real accident cases. The following are a list of suggestions that I would like to emphasize and under-score to the surgeons taking up this work: Teach more what not to do than what to do; go on record as absolutely against antiseptic washes and the washing of wounds by First Aid men, for they will, in every case, poke in more dirt and bugs than they wash out. Talk of, illustrate, reiterate at every lecture, that infection is the unpardonable sin, and that it is all "bugs", not on the car-wheel or the lathe or the cogs, but on fingers, hands, clothing, handkerchiefs, and if nothing clean or dry is available, let the man go to the doctor or hospital with the wound covered only with the local air. Discourage emphatically the use of all washes or so-called antiseptics, such as listerine, peroxide, carbolic acid, iodoform, antiseptic tablets, varnish and adhesive plaster.

In several recent damage suits, the claim has been made that the injury has been made worse by the use of carbolic acid and the like; if they want to use spirits of turpentine, let them. It can do no harm and the man that is hurt can be his own avenger. Lay stress that it is not a First Aid man's work to reduce dislocation or

set broken bones. Instruct him in compound fractures not to try to pull the bone in if it sticks out, but to cover it with clean gauze and get the man to the doctor as quickly as possible. Prohibit the use of medicine and stimulants in shock, teach them by relieving pain, stopping bleeding, application of external heat and encouraging words, that they will cut down shock one-half. Show them the practical use of tournquets on the living subject, explain their use and abuse. In telling how to render First Aid in any accident always begin with this formula: "Send for the doctor." Specialize on fingers and toes, go out of your way to give the "shop eye specialist" instructions. Intimate if he uses cocaine drops you will have him sent to the penitentiary. Show him how to use the loop of a horse hair or an "E" fiddle-string in getting foreign bodies out of the eye and the use of ice-water compresses and a rush order trip to the doctor, instead of the usual backing up in a corner and the jabbing with the pencil, prouding with a burnt match, scratching with a tooth-pick or the scraping with a dirty pocket knife for twenty minutes to get a cinder out of an eye. Tell him of the perniciousness of the use of an eye-stone, a flax-seed, potato, tea-grounds, white of an egg or an antiphligistine poultice for the eye.

Show the men that three men can lift, handle and transport an injured man better than ten, that there are only two conditions where a man's head ought to be elevated and they are, heat-stroke and injuries to the skull, and all the rest his head is to be on a level or lower than his body. They should be told that a man who puts tobacco, spider-web, cotton waste or cow-manure on a wound deserves to be given a jail sentence or put in an asylum. Each locality has a local application for cuts and wounds. In some shops the cure-all is copal varnish or glue, in some it is peroxide and other places something different. These local abuses need some drastic correction, but possibly it is better not to say bluntly, "Don't put this on, or don't do that", but explain the harm that such an application can do, and why, as most men now-a-days are from Missouri, and want to know the reason why. So you see, gentlemen, as a matter of fact, the don'ts are more than the do's.

The materials furnished the men to render First Aid with, should, as I said before, be of the simplest kind, as should also be the contents of emergency boxes. The shell wound dressing and triangular bandage of the Army are as yet the most efficient and

practical First Aid material ever placed in the hands of lay-men. A 2% Picric acid gauze for burns is in every way better than the oil or salve treatment. The sole reason, I think, why railroad companies and railroad surgeons have had emergency material wasted or put to improper uses to the amounts of thousands of dollars in the last decade, and chief surgeons have become discouraged and antagonistic to First Aid and called it first harm, is because the emergency supplies and boxes have been too many kinds, complex and complicated, and the men have not been shown the practical use of the same, but they have just been sent out with a lot of printed labels as to their use and usually the printing has been in very small type, which none of the men ever read.

Interest in the work can be kept up in various ways. One way is contests between teams say from different departments in the shop, between different train-crews, or one division against another for a prize or a trophy. Also by encouraging the corps to make application for the Red Cross certificate examinations, having smokers or some form of entertainment.

On account of the irregular hours of the trainmen and the men in the transportation department, meetings cannot be held on stated days, but times and places can be selected when they are in off their runs.

In conclusion, the First Aid movement has passed the experimental stage and has come to stay and progress and the Red Cross earnestly desires the co-operation of the regular medical profession in the future as it has received it in the past, to guide its movements. I know of one large Railroad Company that has made First Aid obligatory to its training; another has put it in its educational correspondence course, and several systems have given their employees special lectures and distributed printed slips of first things to do after accidents, each year, but I want to just here say a word of caution. Desultory or spasmodic First Aid training is not only inefficient, but often pernicious, doing more harm than good. If inaugurated, do it in a systematic way and keep it up, or do not start it at all.

Now, what does this work cost? Does it pay? And whom does it benefit? The cost of material is a mere bagatelle, train-crews outfit say a dollar and a half, a large shop fifteen dollars, a wrecking outfit, ten dollars, and by the way, I hope to live to see the day when there will be a small First Aid outfit, in the axe-hammer-

and-saw-break-the-glass-cabinet. Emergency material should be put in a durable container, placed in central location in shops and some official should be made responsible for it. He should also see that the supplies are replenished, making a report as to the material used. On trains it should be placed in charge of the conductor under the same conditions.

In regard to the benefits, the injured man gets the most. It is an insurance that insures the injured man against the accidents being made worse by improper handling. He gets well from ten to thirty days sooner. Benefits to the surgeon go without saying. Benefits to the Company, a diminished death-rate, fewer cripples, less law-suits, so that it may well be assumed that great corporations employing large numbers of men are acting wisely and well in encouraging and promoting this beneficent work. Hospital records show conclusively that among injured men, receiving First Aid, there are fewer cases of infection, hence reduced cost of surgical dressings, shorter periods of disability, this greatly diminishing cost of maintenance, and best asset of all, increasing and promoting the chances of the patient for an early, permanent and absolute cure.

For the encouragement of First Aid corps in all industries I would suggest that several times a year the meetings assume a more general character to which all employees and their friends and families could be invited. After the transaction of business general demonstrations with or without music and subsequent entertainment in innocent form could take place. The advantages of such occasional semi-public demonstrations will be in adding a feeling of importance and responsibility in those already trained and a desire to become trained in the outsiders, which can then be looked upon as a sort of reserve of trained personnel.

The Red Cross has several ways of encouraging this work. One is the Red Cross certificate of proficiency given after the termination of a course of one year with an examination showing a minimum efficiency mark of 75. Another is holding contests, field days, public exhibitions, etc., for which the Red Cross gives medals and certificates of merit. We also have two special funds, one gives small cash prizes and medals for meritorious First Aid rendered in mining and industrial accidents. The other is a special fund given by a donor who prefers to remain anonymous, the income of which is awarded as cash prizes especially for railroad men. All these little things serve to stimulate a greater regard for human life and its conservation.

Now, just one last word. Nussbaum's dictum, as you all know, is that the fate of a wounded man depends in whose hands he first falls. Therefore, let your watch-word be, the two preventions: *prevention of accidents,* and *prevention of infection.*

LABOR, A NATIONAL ASSET

DR. EDW. A. STEINER

Somewhere in the dim beginnings a prophet recognized the value of the human—its value above property,—above institutions. Ages passed before there could be gathered around this truth an apostolate to teach it and to suffer the consequences of all those who taught for the first time the fundamental verities—the Gethsemanes, the calvaries—the gibbets and funeral pyres—are the way-marks of this truth as it traveled between the prophet who said it, the apostle who taught it, and the statesman who finally engraved it as law upon the tablets of stone.

This truth has finally reached the point in its development when the last battle for it must be fought, and you are the men who now turn aside from the material and institutional values to carry on this final struggle to its conclusion. The word epochal has been much used and abused and yet it is not an exaggeration to call this movement one which stands out in the history of the development of humanity on this continent. For more than two hundred years man here has struggled with the forces of nature; he was a pioneer in the wilderness and sacrificed himself,—was sacrificed in the process. The pioneer spirit is necessarily somewhat materialistic,—thoroughly individualistic, and while it developed a fine national consciousness it was active only on the political side. Men were willing to die and to kill to get wealth for themselves, and they were as ready to die for the nation as ready to kill for the preservation of the national freedom and unity.

With the development of the means of communication and with a growing intelligence which sharpened our imagination, there began to grow a feeling of social unity. Men knew long ago that unless they stood together politically they would die together, but that men were bound together for weal and woe in this common toil—that the ill of one might be the death of many that is a truth of which

we have but recently become conscious. The civilization which the white man found rested itself mainly upon the chase and war—that which he founded rests itself upon commerce and labor. The white man's civilization gave to every man this fundamental command—"to eat his bread by the sweat of his brow." The white man's god worked, the Indian's God hunted,—therefore the Indian could not stand the test of our pioneer civilization to eat his bread by the sweat of his brow—nor has he stood the latter perverted test, to eat his bread by the sweat of the other man's brow.

Labor was absolutely essential to the development of the white man's country. When he could or would not do it alone—he invaded the black man's country and made him grow the tobacco and the cotton which made the colonies rich—and laid the foundation to our national wealth. This is no place to talk about an epoch which has gone, except as it throws light upon the fact that no generation lives to itself or dies to itself.

At least two generations have suffered the consequences of slavery, paid their toll of blood and tears, and we are not done with it yet. We are paying the wages withheld from the slave, not merely in taxing ourselves for pensions, but in vast consequences to the white race, north and south, now and for hundreds of years to come. When the white man found iron and coal asleep in their rocky beds and when he needed muscle to awaken them and to wed them, he called to the crowded cities and villages of Europe, south and east, and the vast armies of men came and are coming still—and they helped again in the creation of national wealth—colossal and uncountable. We are doing this and doing it to-day—and the nation now and to-morrow and forever will get the wealth and the ilth—to use a term now common in sociological discussion.

You men need not be instructed by me as to the hazards of our modern industry—of the difficulty of infusing into it any kind of idealism—and of the value of labor in the creation of wealth—but that which is not yet stereotyped—that which needs tremendous emphasis—is first the reality of a certain common biological fact that population increases steadily and that it increases most among the masses by which we mean the vast army of hard workers—the five to-day will be forty in the next generation—four hundred in the next, four thousand in the next—four hundred thousand and four millions, in a few decades or generations more.

The national growth then as well as the creation of national

wealth depends upon the masses. A recent census among Harvard, Yale and Princeton men shows that in ten years of married life Princeton men had given to their nation—each 1 and 1/20 of children to increase the population, Yale a little more and Harvard leading the list by bestowing to the growth of their country about 1 and 3/8 of children. Harvard no doubt leading, because of the example set by the strenuous Colonel.

But the national weal depends not only upon the increase in population—it depends much more upon the kind of increase—and here again you and I may turn away from reeking tribes and iron hoards and the common but awful fact of heredity. Of course you may say—what do we care

and after us the deluge—

but after us is no deluge but the harvest.

I have always gone in and out among the toilers with a light heart, a certain kind of optimism which becomes contagious in our young and buoyant country, but in the latter few years my heart has grown heavy as I have seen the results of unremitting toil, of scant wages, of crowded tenements and foul air—of children who are puny in body and mind. I am burdened much by the ills that men suffer now, but I am burdened more by the thought of what the harvest will be. The scholar and the modern theologian have taken from us the fear of hell and of the endless fire for the soul, but they have left us cold comfort for they have put in place of the orthodox hell one infinitely deeper—whose fires burn hotter and can not be quenched.

For the uncertainties of hell we have the certainties of hereditary laws.

The emaciated illfed parent bequeathes to the next generation a puny body—a weakened resistance and evergrowing ills.

If we keep on transgressing against the toiler, his wife and children we shall have the harvest which other nations have already garnered, a harvest of decay and death.

A nation recovers from the effects of war when there are decades of peace and yet the scars remain, but when that *war* is ceaseless, when we kill and hunt and maim ceaselessly we may never recover. National immortality depends upon how we deal with the present generation. National wealth never increases with ever increasing draft upon national health.

We are as responsible for the next generation of toilers as we are for our children and grandchildren, for their weal and woe depends upon the weal of the nation. Labor then produces wealth —how much of it is produced by the handworker—how much by the brainworker, how much by capital—is still an economic puzzle; but with some assurance we can say that the fundamental national wealth is created by the masses of men which we designate by the word labor. We know that that wealth is dependent, not only upon production, but upon capacity for consumption, and in this labor has an acknowledged supremacy by the very force of numbers and increases the national wealth by its growth—the largest portion of the population of the next generation will have sprung from the loins and womb of labor.

We know that the sins of the fathers are visited upon the children, and the sins of the children upon many generations of men: from these conclusions no logic can release us. The nation's asset is its working strength, no more its fighting strength: the man behind the desk and the man behind the machine, and not the man behind the gun—decides great national issues.

Those of us who are watching the growth and decay of nations no more count the soldiers, the ships and the guns; the issue between England and Germany daily grows keener—has already been decided—and no man need hesitate playing the prophet.

The nation which leads in making her labor effective, which protects her toilers best against accident, disease, and poverty, the nation which thinks of her men first before she thinks of guns, has already won the battle no matter whom the fortunes of war favor.

The noblest patriot to-day is he who works best for the commonwealth and our common wealth is our common toil.

No more impoverishing things may happen to a nation than the alienation of the handworkers from the brainworkers and of both from the love of one another and of their country.

Broken ranks, discordant companies, never win battles.

The enervating struggle between capital and labor, the growth of the disease of anarchy, and of the fever of socialism can be ended only by our knowing one another, dependent one upon the other, trusting one another and working together for justice and freedom.

Between the arrayed hosts keenly armed, between the armies of the toilers, and the generals who direct and hold the sinews of war—you are standing as captains knowing both, and the needs of both.

your desire for guardianship of the nation's most precious wealth—the laborer's health and life—marks you as mediators in the conflict which is on.

I can not help but feel that this is an epochal moment, when you who are guarding—the mysterious forces of light and energy—are saying "we must guard our nation's *first asset*—the life and limb of labor." This spiritualizes your task and is on the whole your greatest contribution to your country and to humanity. May God speed you on your way and bless you in your efforts.

The Chairman: You will notice upon the program that the chairman appears for a paper at the close. He believes that the hour is so far spent that that paper should not be read.

DISCUSSION OF MCCHORD'S PAPER

H. B. HULL, Illinois Central R. R. Co.: Mr. Chairman and Gentlemen: There are present here some of the distinguished pioneers, men who are responsible for the safety movement which is now sweeping over the country, so far as it relates to the steam railways, and it would, therefore, be presumptuous on my part to take up your time by saying more than a very few words.

I am here representing a large railway system which is seeking information, a railway system which has put into effect as many of the safeguards against accident as has to it seemed practicable, and is now anxiously reaching out for others.

The record of railroad accidents which has been made, analyzed and presented here by Commissioner McChord, is appalling. The railways are not attempting to defend it, but they are striving with all their might to improve conditions so far as in their power lies. Wherever men meet to discuss preventive measures they send their representatives and in every instance where a good, practical suggestion has been made, the roads have been quick to take advantage of it.

If the problem of how to prevent railway accidents should be solved at this meeting, the glad news would be flashed over the length and breadth of this country and would be responded to by

immediate action on the part of the railways. They are constantly on the alert and are as anxious as the Government itself could possibly be to reduce the number of accidents, for they are most vitally concerned.

If the public and the railways should work together more closely, and if the public could be induced to approach this accident question in the same spirit the railways should like to approach it, I verily believe that much could be accomplished and that the devastation of life and limb, which has been going on, could be curtailed and controlled to a very large extent.

The great paper read here by Commissioner McChords of the Interstate Commerce Commission is illuminating. Among other interesting things, it shows that for the twenty-year period, 1890 to 1909 inclusive, 86,733 persons were killed on the railways of this country while trespassing, which is more than one-half of all the people killed in railway accidents during the same period, and, gentlemen, horrible as is the record, I do not believe it is complete. In my opinion, there were more cases, a good many more, than were reported, because the system of collecting the information, by the Government, and the furnishing of it by the railways, was crude and nothing like as complete as it is at the present time.

Since the passage of the Act of 1910, which became effective in July of that year, the Interstate Commerce Commission has been getting full and complete reports, and will continue to do so, and I predict, without fear of successful contradiction, if present conditions are allowed to obtain throughout the next twenty-year period, that the number of trespassers killed will more than double. A gloomy prediction, isn't it, to make at a meeting of this kind? There will be more trains and longer trains, more track and more people and all these things are conducive to a greater number of fatal accidents to trespassers.

The 86,733 trespassers who were killed during the twenty-year period were not tramps. They belonged to all classes, including women and children, contrary to the popular belief. They were human beings who deserved the protection of the Government, but they had it not, and it cannot be contended that they did not need it.

It is all right to talk about what the railroads should do to prevent accidents. They realize the situation and have made SAFETY FIRST paramount to all other questions connected with operation. Much is being accomplished at the present time along

the lines of safety and the work has just begun. I think the railways can be depended upon to do their full share, but we have the figures here compiled by a member of the Interstate Commerce Commission, which shows that in twenty years over 53% of all the fatal accidents on railways of this country were trespassers. Think of that. More than one-half of those killed! Does it not seem that the first and most important step to be taken should be in the direction of a solution of the trespasser problem?

It is believed a Federal Law, forbidding trespassing on trains and waylands of interstate railways, would prove effective and reduce trespasser accidents, both fatal and non-fatal, to a very large extent. Strange as it may seem, we are still without such a law and the unspeakable slaughter of humanity is permitted to go on.

It is true most of the States have laws against trespassing, on trains, but they have proven inadequate. People have a more wholesome respect for the laws of the United States than any other for the very good reason that there is usually an effective effort made to enforce them.

So far as this trespasser question is concerned, and when it comes to fatal injuries on railways, it has been shown that it represents more than one-half, *the railways are powerless.* We had just as well look this situation squarely in the face. There can be no change in the present conditions relative to fatal injury to trespassers, *unless it be from bad to worse,* without the assistance of the Federal Government.

When we consider the remarkable activity of the Government in its efforts to protect railway employees and passengers, it is certainly worthy of note that up to this time nothing has been done toward the protection of trespassers, and it will be extremely gratifying to safety workers all over this country, and to humanitarians everywhere, that Commissioner McChord has taken the initiative in what, it is to be hoped, will culminate in concerted action, having for its purpose the passage of a law which, it is believed, would accomplish more to insure safety than any other one thing that could be done.

DR. M. J. SHIELDS: I would just like to answer the paper of the gentlemen from the Illinois Central. Last December I stood in the back end of our Red Cross car at Batavia, N. Y., where the West Shore and New York Central Companies together have, you

might say, six to eight main tracks. There were two large agricultural implement manufactories just below the crossing. Those six or eight main tracks were all together and trains were passing every five minutes in each direction, and there were broad streets, one on one side and one on the other, when the whistle blew at twelve o'clock those six main tracks were black with men going home to lunch when they could just as well have walked on one side or the other. I really think we ought to have a law like—I don't know whether it is a law in Japan, but I have heard it meets all demands—if a man gets killed on the railroad track and is a trespasser, the railroad ought to have the right to sue the estate for damages.

Mr. F. H. Bohlen: It would be interesting to know if there are statistics available which show any diminution in the percentage of accidents to trespassers in those states in which there are laws on the books which do make trespassing upon railways a misdemeanor. I expect, however, you will find very little difference in the amount of accidents to trespassers, even in those states where the laws are enforced. I do not believe a law so unpopular, which conflicts so much with settled public practice which the public think they have a right to indulge in, could ever be enforced by mere local authority. I believe it requires a central authority which, representing the nation as a whole, is not amenable to local public opinion. I am thoroughly in harmony with the suggestion that the Federal act alone would be sufficient for the purpose of checking trespassing.

Mr. R. C. Richards, (Chairman Central Safety Committee, Chicago and North Western Railroad): Mr. Chairman, it seems to me this very interesting paper which has been read by Mr. Belknap, and doubtless was also in a measure prepared by him, demonstrates two things. It demonstrates the difference in the manner of reducing accidents by law and the manner of reducing accidents by co-operation. Mr. Belknap tells us that in twenty years by law, penalizing the corporations, they have reduced the fatal accidents to trainmen 73%. On the North Western Railroad, by co-operation of the trainmen, we have reduced the fatal accidents to trainmen in twenty months 50%.

I think the law and the legislation about accidents has been

greatly overdone. The penalty is always on the corporation. There is no penalty on the man if he does not comply with the law. The law says that couplers shall be made so that men shan't go between the cars and fixes a penalty in case the corporation does not provide them. There is, however, no penalty fixed for the man who disregards that safety appliance and insists upon going between the cars. The same thing applies to our hours of labor law. We have the labor law, which is very strict, that no man shall be allowed to work more than sixteen hours and then he must have his eight hours rest. There is no penalty, however, for the man if he takes no rest.

It seems to me that this law business has been largely overdone. That it is pretty near time, if we are going to have additional legislation—to legislate so that the men shall be penalized for failure to comply with the law, as well as the corporation.

There is one other thing I want to say in connection with the accidents to trespassers. Unfortunately, it seems to be utterly impossible to impress upon the public the fact that these trespassers, these hundred thousand trespassers that have been killed and injured during the last ten years on the railroads of this country, are not tramps. The idea of the public seems to be that really we are doing a charitable action in getting rid of them because they think they are tramps. When you come to consider that on every one of the three hundred and sixty-five days in the year there are fourteen killed and fifteen injured you can commence to realize what it means—but of that very large proportion of trespassers that are killed and injured, 25% or 30% are children. We are taking away from ourselves and from the future of this great country of ours every ten years nearly 25,000 children that are under twenty-one years of age and over half of them are under fourteen years of age. You can hardly go in any town of any size on any railroad in this country but you will see some poor little devil that has lost an arm or lost a leg hitching on the cars or playing on the tracks, you will find up in that little village graveyard the grave of some little child, perhaps an only child, who has been killed trespassing on the tracks, and yet there is absolutely no public opinion against it, and if any effort is made by any corporation, or by anyone else, to put an end to the trespassing of children on the tracks immediately everyone is up in arms against it, and absolutely nothing can be done in the trespassing field until the people are educated that it is they and not the tramps who are being killed and injured.

The Chairman. The chairman must take time for a brief announcement before adjourning. Many of you heard the resolution of the Iron & Steel Electrical Engineers which was read by the president at the banquet last night, in which they undertook to transfer to the hands of the representatives of this Congress the responsibility which they have carried with such conspicuous success for the last four or five years. Practically the only national organization which has been concerning itself with problems of industrial safety in that period has been this Association of Iron & Steel Electrical Engineers. I am well aware that the Civic Federation and the Association for Labor Legislation have given it attention from time to time, but a consistent and continuous policy of attention to that item of industrial progress has been characteristic of this organization, the Iron & Steel Electrical Engineers, which very naturally came to its consideration in view of the fact that they are, as was said last night, omnipresent in the activities of the steel mills, and omnipresent in the activities of almost all industrial concerns. They knew the situation, with a thoroughness no doubt found in no other class of men who are connected with our industrial establishments. So that gradually, from the small beginning of an hour or two given in their earlier meetings to the consideration of safety, the matter has expanded on their hands until now it has reached the point where they felt that the time was ripe to invite this Congress to meet under their auspices and to establish itself as a permanent organization.

You heard at the time of the reading of that resolution the names of those who were asked to discuss the question of permanent organization and to hold themselves responsible for the further development and permanency of this Congress.

Will the gentlemen of this organization Committee kindly meet in this room at one o'clock this afternoon. If there is no further business The Federal Session will adjourn

STATES SESSION

Presiding Officer: W. F. HOUK, Commissioner of Labor, Minnesota.

"Opening Remarks."

"The Relation of Accident Compensation to Accident Prevention,"
C. H. CROWNHART, Chairman, Wisconsin Industrial Commission.

"The Wisconsin Industrial Commission Plan of Promoting Safety,"
C. W. PRICE, Chief Safety Expert, Wisconsin Industrial Commission.

"Improvement of State Factory Inspection,"
DON D. LESCOHIER, Expert, Minnesota Bureau of Labor.
MR. FRANCIS H. BOHLEN, Pennsylvania Industrial Accident Commission.

"The Illinois System of Factory Inspection,"
EDGAR T. DAVIES, Chief Factory Inspector, Illinois.

"The Manufacturers' Relation to State Factory Inspection Departments,"
WILLIAM GEORGE BRUCE, Secretary Merchants' and Manufacturers' Association of Milwaukee.

GENERAL DISCUSSION

W. L. O'BRIEN, Factory Inspector, Kansas.
JOHN P. GARDNER, Assistant Labor Commissioner, Minnesota.

"Safety as Insured by Systematic Fire and Panic Drills,"
LEWIS T. BRYANT, Commissioner of Labor, New Jersey.

Note.—Mr. Davies paper appears in Appendix.

STATES SESSION

Presiding Officer W. F. HOUK, Commissioner of Labor, Minnesota

The Chairman: I wish to assure you, gentlemen, that the Minnesota Bureau of Labor esteems it an honor to be represented by its Commissioner at this meeting. Our Bureau has been especially interested in prevention work for the last three years. In 1909 we made an investigation of industrial accidents and we discovered that over ten thousand non-fatal accidents and 342 fatal ones occurred during that year. These figures opened our eyes and those of employers, and we so increased our prevention efforts that fatal accidents were reduced in number 50% and non-fatal ones 29% in the last three years. This rapid decrease in accidents emphasizes what can be done when the state and the employer seriously attack the problem of prevention, and we come here this afternoon convinced that this meeting will be the means of saving thousands of lives and tens of thousands of injuries in the several states within the next few years. We believe that the accidents occuring in America's industries at the present time are at least twice or three times as large as they should be. We believe that America's state factory inspection is not as good as it can be made. We believe that the state departments of America have not reached that efficiency which they should and can develop, and we trust that this meeting will result in the state departments attaining that greater efficiency in safety which means so much to the working men of the different commonwealths.

I am glad to see so many present and the interest so intense, and I esteem it an honor to be able to introduce to you, as the first speaker this afternoon, the Honorable C. H. Crownhart, Chairman of the Wisconsin Industrial Commission, whose subject will be "The Relation of Accident Compensation to Safety." (Applause.)

THE RELATION OF COMPENSATION TO SAFETY

C. H. CROWNHART

The doctors tell us that for every violation of the laws of health, nature imposes a penalty. And we know that this is true.

From the cradle to the grave, nature is teaching us safety. Does the toddler fall? Nature tells him to be careful. Does the boy too soon connect with the green apple, or with the cucumber? Nature shouts its warning through the stomach. The barefoot boy with the turned up pantaloons leaves off his merry whistled tunes when he stubs his toe. Nature sounds its warning. Truly has it been said that "Nature is a wise old teacher."

As the young man goes out into the work shop to earn his right to live by brawn and brain, he carries with him the experience of his childhood and youth. That experience tells him to have a care lest physical pain and suffering shall be his lot. And day by day he gains in experience. He sees his fellow workers fall by the wayside. He is a witness to their suffering—anguish of mind and body. He learns, too, how great is the loss to the loved ones when the bread-winner of the family is stricken. Nature teaches him to be careful.

The news of the day shouts a thousand warnings—Be Careful! But business, industry, cries Hurry! Hurry! Hurry!—always Hurry! The workman, the soldier of industry, is surrounded by a thousand dangers. The forces of nature, linked with wonderful machines devised by man, rise before his untrained intellect, in bewildering complexity. His sensitive nerves become callous. Too often he neglects the caution of experience and judgment, with the result that he is the victim of accident. When he is injured, he alone suffers the consequent physical and mental pain. No one can share these with the unfortunate workman.

We know, however, and we must not allow our eyes to be closed to the fact, that neither the workman nor the employer is alone to blame for the casualties in our industries. The causes of accident can not be scientifically classified. Accidents result from many contributing causes. The great cause, the one overshadowing all others, may be called the hazard of the employment.

By study, and by eternal vigilance on his part, the employer may lessen the hazard of industry. The employe, likewise, is capable of reducing the hazard. But the employer must not be allowed to forget that he is the captain of the industry, and with his rank goes the greater responsibility. And he must come to a realization of the fact that he can not if he would, shift from himself, the burden.

The captain must select for his soldiers, competent workmen. He must assign them to the proper kind of employment, and must

urnish them with safe places of employment. He must surround his workmen with fellow servants who are competent. He must give to his employes competent foremen, proper instructions, and constant efficient supervision. He must inspect his machinery, his ways, his methods, and his safeguards at every turn. He must not only make reasonable rules for safety, but he must enforce them. And when he has done all of these things, he will still have those accidents which will come from the hazard inseparable from industry, impossible to be foreseen.

Because of the great responsibility imposed upon the employer, he. too, should accept penalty for his failures. As the sensitive nerves of the body transmit to the brain of the workman constantly, the warning to be careful, so should the sensitive nerve of business serve to warn the employer to be careful.

What is the sensitive nerve of business? I need not answer that question for you. You know that it is the dividend. You may talk about humanity until Doomsday. But our feelings of compassion for the unfortunate are touched after the accident—not before. And then we spend but little time in vain regret. We turn to our business. and business means dollars.

Now, the workman is penalized in every case of accident by the suffering incident to his injury. So, too, the sensitive nerve of the employer, his dividend, must be touched in every case of accident if he is to be spurred to his full duty. This means that when a workman suffers from accident, the employer must suffer in the way most surely to teach him the care due his employe. By this method, and by this method only, can the employer be made to realize and appreciate the necessity of guarding against accident—be made to respond to his full duty in that respect. This penalty will bring response.

Just for a moment contemplate. During the twelve months from September 1, 1911, to September 1, 1912, exculsive of accidents in the railroad service, there were in the state of Wisconsin over 6500 accidents, each of which caused disability on the part of the workman for more than seven days. This would seem to be worse than war. At least more men were injured during that time than were wounded during the same time in the Spanish-American or the Phillipine wars. And mind you, 50 per cent of the time loss incident to these casualties could have been saved by the employers had their full duty been done as here outlined.

Here then we have the relation between accident prevention and workmen's compensation. They are obviously correlated. One is the complement of the other. And they should both be administered by the same body so that the relation of prevention and compensation may always be kept before the employer. It is for this reason that self insurance is best for safety, and next to self insurance comes mutual insurance. *All insurance should carry credit for good work on the part of the employer for accident prevention, and counter-charges for poor work.* Let this be a contest in which money is to be saved, then watch results.

All the time the employer should be made to feel the relation of accident to cost of accident. And it is workmen's compensation that brings this home to the employer as nothing else will.

We are pleased, indeed, that progressive employers everywhere are taking into account the maimed and dead workman. They are beginning to count the cost of personal injury in dollars. This presages saving of life and limb—preserving to the family the bread winner—preventing suffering and want

In Wisconsin the factory inspector used to compel safety with a big stick He was the policeman with the club. Now, the office of the Commission is to point the way to safety—the employer will do the rest

Since the Workmen's Compensation Acts of the past two years more real safety work has been done in the United States than in any ten years preceding. This is due almost wholly to a fuller realization on the part of the employers, to the cost of accident. As the relative cost of accident becomes greater, the necessity for accident prevention becomes the more apparent.

There is no statute that ever was or ever can be enacted that will efficiently safeguard the worker except such as automatically provides the penalty for the employer for each and every injury received in the work places as the result of accident.

The Compensation Acts provides the penalty and at the same time subserves society as a whole by distributing the burden of loss from the weaker members of society to society as a whole. But of more importance than the relief to the injured worker, which comes from compensation, is the prevention of injury because of compensation Heretofore the efficiency expert has studied his subject almost wholly from the standpoint of increased production to reduce the unit of cost Let us not forget that the thing produced is only

valuable as it conduces to the welfare of man. No increase of production is desirable that adds to the sum total of human misery. He is no benefactor of mankind who makes two blades of grass grow where one grew before, if in so doing he sacrifices human happiness

THE WISCONSIN INDUSTRIAL COMMISSION PLAN OF PROMOTING SAFETY

C. W. PRICE, Wisconsin Industrial Commission

The Wisconsin Industrial Commission is so organized and empowered that it is able to adopt *exactly the same ways and means of promoting safety and sanitation in industries* as have been adopted by the various large companies which have successfully done work along these lines. The law creating the Industrial Commission specifies that places of employment shall be safe, and then empowers the Commission to make investigations and determine what places are unsafe. It is the duty of the commission to fix standards and to prescribe safeguards or other means of protection which are best adapted to render places of employment safe, and to maintain museums of safety and sanitation which shall include the best experience of those industries which have successfully worked out the problems of safety and sanitation.

In the few minutes assigned to me on this program, I wish to describe briefly how the Industrial Commission has adopted the methods used in large industries in promoting safety, and how these methods have been adapted to state work, and what has been the success.

In the first place, the Industrial Commission, in its relations to the manufacturers of the state, *has frankly taken the position that the work of promoting safety and reducing accidents to employees cannot be successfully accomplished without the genuine and intelligent interest and hearty co-operation of the manufacturers.* The commission has been convinced from the start that not more than one-third of the reduction in accidents which it is possible to accomplish, can be accomplished by any coercive measures which

could be adopted by the commission to force the manufacturers to equip their plants with proper safety appliances

When the commission entered on its duties, it sent to the manufacturers and placed before them the work which it proposed to do along the line of safety and asked their co-operation, not only in equipping their individual plants, but in assisting the commission to formulate rules and to organize exhibits of safety A committee on safety and sanitation was first organized to draft rules which should be issued by the commission as orders. In making up this committee the Merchants' and Manfacturers' Association of Milwaukee the Manufacturers' Association of Wisconsin, and the Federation of Labor were each asked to appoint two representatives the Milwaukee Board of Health was asked to appoint one representative, the Employers' Mutual Liability Insurance Company of Wausau, was asked to appoint one representative, and the Industrial Commission appointed two representatives All of the members of this committee were practical factory men, four of them being employers and four employes in large industries This committee spent several months working out rules on safety, and finally recommended to the Industrial Commission thirty-four rules, which were published as orders in Bulletin No [illegible] under date of May 20, 1912 These rules covered the more primary points of danger in factories This committee is still at work drafting rules

The following sub-committees have been appointed, to assist this committee committee on elevators, committee on boilers, committee on bakeries, committee on laundries, committee on sanitation and committee on buildings Each one of these sub-committees is made up of men who have had practical experience along the special lines covered by the committee For instance, the committee on elevators includes an elevator manufacturer, three elevator inspectors, and one architect. The committee on boilers includes a boiler manufacturer, three boiler inspectors, and a prominent manufacturer who is a boiler user. The committee on sanitation includes an electrical engineer connected with one of the large industries, an expert on exhaust and ventilating systems, a specialist in sanitation, a practical metal polisher, and a man connected with one of the large industries in Milwaukee who has charge of equipping the plant with sanitary appliances.

A special committee made up of the deputies of the Commission, has visited some one hundred of the various industries of Wisconsin,

making a special investigation of problems on safety and sanitation, in order to furnish these committees with information which will enable them to draft rules which will be based on experience and which will be in line with good shop practice and the best standards. The *one point which has been most strongly emphasized* by the commission from the start is that every rule which is drafted, and every order or suggestion which is issued, must be based not upon theory, but upon actual experience. On the front page of Bulletin No. 1, in which the first rules were published the Commission printed in large letters, the following: "NO SAFEGUARD REQUIRED WHICH CANNOT BE PROVEN TO BE PRACTICAL. NO SAFEGUARD REQUIRED WHICH THE COMMISSION CANNOT SHOW HOW TO INSTALL."

Following the plan of having rules drafted by experienced factory men and based on experience, the Commission has organized three exhibits Each exhibit includes about 1200 photographs and blue prints which represent some of the most practical and efficient safety devices which have been adopted by a number of the best manufacturers in Wisconsin and outside. One of these exhibits is included in the exhibit of this congress, and therefore I do not need to describe it in detail. One of these exhibits is located permanently in Milwaukee, and two of them are now making a tour of the state, spending one or two weeks in each of the twenty-five manufacturing towns. Two of the deputies of the commission accompany each exhibit, and while located in a town call on all of the manufacturers and endeavor to have them visit the exhibit with their superintendents, foremen and employees.

The business men's clubs and manufacturers' associations in the various towns have given splendid co-operation in making the exhibits and meetings a success. In Milwaukee the Merchants' and Manufacturers' Association has given the Commission the use of a large room for the exhibit and through letters to its members and the monthly bulletin has done much to interest the manufacturers in the work of safety.

During the week a meeting is arranged for in some public hall, and a general invitation is given to the manufacturers and to the people of the town to attend. The attendance at the exhibits and at the meetings thus far has been most encouraging. In practically every case all of the manufacturers have been represented by their superintendents and foremen. At these meetings a member of the

commission, and the deputies, speak and outline the plan of the commission in its work of promoting safety and in the administration of the Compensation Act, and also give some statistics regarding what has been accomplished by some of the industries in reducing accidents, and the ways and means adopted. *The statement is always made that the* experience of some of the large corporations has demonstrated that it is possible to make a reduction of over fifty per cent in time lost on account of accidents, and that not more than one-third of this reduction can be accomplished by mechanical safeguards or equipment, while two-thirds must be accomplished by rigid inspection on the part of foremen and workmen, careful instruction especially of new men, proper supervision and discipline, and booster meetings of foremen and workmen to promote the spirit of interest and enthusiasm and to keep the question of safety uppermost in the minds of all employes.

A bulletin is issued each month by the Industrial Commission and copies are sent to all manufacturers of the state. This bulletin is used as a medium through which the commission may place in the hands of manufacturers statistics in regard to causes of accidents, cuts of important safe-guards and sanitary appliances and suggestions from the various manufacturers regarding the best ways and means of organizing and promoting safety and reducing accidents.

In each bulletin will be published a number of accidents which have occurred, giving the causes, the disability and what might have been done to prevent them. The commission hopes to make this bulletin a bulletin of experience which will give each manufacturer the benefit of the experience of other manufacturers both in the state and outside.

In organizing the corps of factory inspectors, the commission has been careful to select only men who have had practical shop experience. These men have been given opportunity to see some of the best work which has been done in various industries along the line of safety and sanitation, and thus they are equipped to go into a factory and to suggest *practical* ways of safeguarding every point of danger. These deputy inspectors do not carry a club, and do not need one in their work. They go to the manufacturer as a friend—not as a spy, and in every way endeavor to win his co-operation and to assist him in working out his problems on safety and sanitation. *The one word which the deputies keep uppermost in mind*

CO-OPERATION." Without this they know that success is impossible.

If I had time I might cite numerous instances where the deputies have gone into factories with this spirit of courtesy and co-operation and have done constructive inspection which has resulted in the transformation of those plants and the covering of every point of danger with efficient safeguards. I recall one of the large manufacturing towns in the state which was inspected some eighteen months ago by a deputy of the Commission, and over 3,000 orders were issued covering points of danger which were unguarded. A recent report to the commission shows that every one of these 3,000 points of danger has been covered, and this town is now one of the two best towns in the state in its interest and enthusiasm along the line of safety.

About a year ago one of the deputies visited a large paper mill in which practically nothing had been done in safety work. He took photographs with him and spent a day in going over every point of danger and in showing the superintendent and master mechanic the various ways of covering them with practical guards. I visited this plant three months after the inspection was made, and the owner told me that he appreciated very much the service which our deputy had rendered him in helping him to get started along right lines, and that within three months he would have his entire plant equipped.

Last November one of our deputies, who is a practical foundryman, visited one of the largest foundries in the state. The general manager asked him if he could assist him in securing one hundred moulders. He said, "I am in great need of moulders. Right now I have thirty men off with burned feet." The deputy said to him, "Why don't you stop the burns?" and then explained to him how a number of the large companies had adopted the plan of purchasing moulders' congress shoes and selling them to the men at cost. This plan enables the foreman of the foundry to enforce the rule regarding the wearing of congress shoes. The manager said that he would try the plan, and ordered a large quantity of shoes. The deputy visited the plant a few days ago, and the manager stated to him that the plan of selling shoes had worked out very successfully. All of the foundrymen had purchased shoes, also a large percentage of the other shop men. Since the adoption of the plan the manager stated that the burns in the foundry have been reduced 85 per cent. Of

course the manager was grateful for the service which the deputy had rendered him.

The past year's experience of the Industrial Commission in promoting safety along the line which I have indicated, has *more than convinced the commission that the plan of working the whole problem out along the line of experience, and in co-operation with manufacturers, is the best plan to get results.* The commission is receiving many expressions of appreciation and co-operation from the manufacturers, and very few criticisms. The thirty-four rules, published in the first bulletin, covering all of the primary points of danger, have been accepted by the manufacturers as embodying the standards of safety which are necessary in order to furnish adequate protection to their employes. Practically no criticism had been received from manufacturers regarding the practibility of the standards represented by these rules Some half dozen letters have been received from manufacturers, who claim that on certain points exception should be made to the rules because the points of danger were not accessible. One manufacturer stated to me, "When I read the bulletin and saw the names of the practical manufacturers who were on the committee which drafted the rules, I made up my mind that the rules were right, and I am now busy equipping my plant with safeguards."

The deputies of the commission who are calling on manufacturers every day, are finding that in the large majority of the plants they visit, the work of building safeguards is going forward. Manufacturers of Wisconsin have learned what the manufacturers all over the country are rapidly coming to know that this whole proposition of protecting workmen and reducing accidents is a business proposition as well as a moral question, and pays in dollars and cents.

IMPROVEMENT OF STATE FACTORY INSPECTION

Don D. Lescohier, Expert, Minnesota Bureau of Labor

Mr. Chairman, and Gentlemen: The points that I have to make this afternoon have all been made in Mr. Price's paper, I think, in a somewhat different way. The Minnesota Bureau of Labor, as far as factory inspection work is concerned, I suppose is as efficient as any of the state factory inspection service outside of Wisconsin.

We take off our hats to the work Wisconsin has done during the last year, but as regards the other states I believe our inspection service is about as good as theirs.

But, speaking frankly, gentlemen, as a member of a state labor department, factory inspection in the United States is not what it ought to be and not what it can be, and we are interested in Minnesota in building up more efficient state factory inspection. I hope that there are members of other state factory inspection departments here. We have fundamental difficulties to overcome. Leaving out of consideration our state Free Employment Bureau and their appropriation, we have twenty-seven employes in the state of Minnesota connected with our statistical and factory inspection department, and, for their salaries and traveling expenses, and all office expenses, we have $43,000 a year. You realize that when you pay the salary of twenty-seven persons, including an office force, out of $43,000 you haven't much left for traveling expenses, for the publication of bulletins, for the carrying on of field investigation, and for doing what Mr. Price has very happily designated constructive factory inspection.

The first need in our state factory inspection departments, but it is one we do not want filled until those departments are awakened to the fact that they are not as efficient as they ought to be, is the need for greater appropriations.

Suppose that with the support of enlightened manufacturers and enlightened workingmen, we can get those appropriations, what is necessary for the improvement of state factory inspection? The first need, I think, gentlemen, is supervision. None of you who are running manufacturing plants have departments without superintendents or gangs of men, without foremen, but our state factory inspection departments are very largely in that condition. The inspectors are very frequently appointed practically without the consent of the man who is supposed to be their chief, and he has neither, in most cases, the power to hire or the power to fire, and if he has not the power to hire or to fire, he has not the power to compel efficiency in the men while they are under his direction. Furthermore, in state factory inspection the factory inspectors have to go out over the state. We cannot have them in one room where we can watch them, and it is highly necessary that we shall get some highly effective form of supervision.

Along with this necessity of being able to hire and fire, we have

to have another thing which is, in a way, inconsistent with it, and that is permanence in office. I think that what we must contend in our state factory inspection service is this, that we must be able to retain a man as long as he is efficient and fire him the minute he is not efficient, and lay political considerations entirely to one side. For the last three years we have been fighting for such a condition as that in Minnesota. We have got it to some extent, but we have not got it in anything like the degree we ought. We have not the permanency or the control over our men, but most of all we have not the power to supervise. I believe that to get efficient state factory inspection we must have a state factory inspector who does go out and act as a foreman over his men. Some states have state factory inspectors. I do not know just how they carry on their work. But what we feel in need of in Minnesota, and what we want the support of the manufacturers of Minnesota, for what we want for ourselves and for other states, is a state factory inspector who can be sent out. Suppose an inspector went out to a certain town and inspected it. Without any notice to him we ought to be able to send another man, a chief, an expert, who is a fine mechanic, into the same town and turn in an independent set of suggestions to the state commission. I do not mean give the manufacturer another set of suggestions, but send them in to the state department so the Labor Commissioner could see how efficient the work of his men is, and then call their attention to their deficiencies.

There is another thing that is essential in state factory inspection service and that is specialization. Our state factory inspectors have had to go into establishments and inspect for safety, sanitation, women and child labor, lighting, and for anywhere from half a dozen to fifty things besides. They have had to collect statistics, the number of wage earners, all that kind of thing. I believe state factory inspectors, if they are going to accomplish any real work in safety, must be specialists, and we must put this question of safety in the hands of men who do nothing else. That means extra traveling expenses, a specialist for safety, a specialist for women and child labor laws, but I think it means economy in the long run, when you consider the work done and what has been accomplished.

A third thing, and what they are doing in Wisconsin—they are doing all of these things—we must educate our factory inspectors

that they must become safety specialists, they must be acquainted with the literature on this subject, they must have the opportunity of going and visiting those plants, whether in their own or other states, where the most advanced safety work is done.

If we can get these things I have spoken of we can greatly improve state factory inspection. We cannot get them until we realize the need of them, and we cannot get them until the manufacturer is convinced that state factory inspection is a service to him and can be of real value to him, and uses his influence in the legislature to have these departments put upon the highest plane of efficiency. Perhaps they can never be as efficient as some of the private corporations' safety departments, but we must bear in mind that many of the smaller plants can never have these safety departments, and must depend upon the state for their instruction and guidance, and therefore it is highly essential, especially in these western states, for the state service to be put upon the highest plane that is possible.

The Chairman: There is a gentleman presented whom I endeavored to have on this program, but who notified me that it was questionable as to whether he would be able to be here, and his name does not appear. I know you will all enjoy hearing from him. I am going to ask Mr. Francis H. Bohlen, member of the Pennsylvania Industrial Accident Commission, to address you for a few moments. (Applause.)

Mr. Francis H. Bohlen: Mr. Chairman and Gentlemen: I do not know that I can add very much to what has already been said by Mr. Crownhart upon the only subject which I feel I know sufficiently to make my remarks of any interest to you. I come from the state of Pennsylvania which has, I hope, awakened after many years of, let us call it, somnolence. We have had the advantage of the experience of other states, but have had perhaps too little time to do our work, but we hope we will at least after the next session of the legislature be able to show a Workman's Compensation Act which will act, I am sure, as Mr. Crownhart has predicted it would act in Wisconsin.

In listening to Mr. Price's most interesting account of the work of the Wisconsin Industrial Commission, I was struck by his statement of the wonderful results which had been attained without the use of the "Big Stick." While I believe that mankind is as

humane as it can afford to be. I do not believe that they would have seen that they could have afforded to be humane and install these devices which the excellent service of the committees of this Commission has put before the manufacturers of this state. I do not believe that they would have seen that they could have afforded that had, on the other side, they not seen that if they did not install them, the cost of paying for the resultant injuries would be much greater than the cost of installation. I believe that the motive of self interest will lead to individual effort to perfect devices

I have seen in the state of Pennsylvania what I have no doubt exists in all the other states, the most intelligent effort directed by the leading corporations of our state to the prevention of accidents, reaching results which I do not believe could be, under at least any political system which we know in the east, obtained by any board even of experts appointed by a state. I believe that the steel industry of Pennsylvania has done a work towards accident prevention which no state board of experts in the east, at least in the far east perhaps we better put it, because I am rather hazy as to where the east begins and where the west ends, but in the Seaboard states, I will put it, I doubt very much whether we have any political machinery which will enable us to obtain a board of experts so good as that which this individual initiative has secured

I believe that while the intelligence of these great corporations has enabled them to see the other side, the pleasure of indulging their humanitarian feelings, and not reducing accidents as a mere matter of business, there is no question that business is more efficient from the standpoint of the employer, more profitable to him, if it works smoothly and without accident. There can be no question that there is a loss not merely to the individual workman horribly injured, but to the disarrangement of the whole business, by every accident.

The hardest problem is the smaller employer who cannot see so intelligently, who has not the means to investigate, who has not the capital to spend unless he is forced. To induce him to insure himself, or carry his insurance in a mutual company, is the object of the legislation which we have proposed and hope to see adopted, it will be the incentive, I think, for him to follow the lead of these gentlemen who mutualize their efforts and attend such meetings as this. We should at least bring them in touch with the

literature which the Association of Iron & Steel Electrical Engineers is only too glad to put at the disposal of everyone who will utilize it.

Personally I despair of so far rendering definite the precautions to be taken in safeguarding machinery by any act, I despair in so far defining it that you can eliminate the factor of the personal administration, or the corrupt administration by the persons entrusted with its execution. I believe we have a good factory act and, while I do not claim we should be put in the select group, I think that, on the whole, there has been a moderate effort to enforce it. I do not choose to commit myself further, but I feel quite strongly that the personal incentive, self interest, will be more efficient than any factory inspection enforcement which we, in the east are apt to obtain. (Applause.)

MANUFACTURER'S RELATIONS TO STATE FACTORY INSPECTION DEPARTMENTS

WILLIAM GEORGE BRUCE, Secretary Merchants' & Manufacturers' Association of Milwaukee

The last speaker touched upon the question of co-operation between the authorities on the one hand, and the manufacturers upon the other. Let us say that our experience in Wisconsin has been peculiar as far as several important Commissions and the duties put upon them were concerned. We have had Commissions here that have been created under a strong opposition where it required the utmost tact, skill and judgment to carry out the law that they were entrusted with. When the Industrial Commission of Wisconsin was created I could see the breakers ahead. I could see where there might be strife and contention, and where there might be bad blood on both sides. The members of the Commission were told that trouble would follow, but here is what happened: The members of the Commission called the manufacturers together and said: "Gentlemen, here is the law. Now, let's you and I get together and interpret that law correctly, carry out the underlying principles, carry out the spirit of humanity, and co-operate with us." Here and there you would find a man who was in opposition, but when the manufacturer found that there was an absolute spirit of fair-

ness, a spirit that intended to bring about results both along the lines of humanity and economic advantage, then the manufacturer stood ready not only to co-operate, but he gave his time and his assistance in order to work out the rules and the regulations and to carry out the law. To that end and to that extent I think that the Commission of Wisconsin, and the splendid men that were drawn into its service, are to be congratulated. The beginning has been made, and I want to compliment the men who are here to-day with a humane tendency, that it is going to bring practical results.

Something has been said here about the economic advantage or self interest. I do believe that as this movement will grow in this country that self interest will play a part, but that self interest will play a part to the advantage of the movement itself. Let me illustrate. I returned a few days ago from Europe. While in the city of Munich I saw an announcement of a workmen's exhibit. I visited that exhibit and found a large, commodious building devoted to exhibits of machinery, accompanied or equipped with safety devices—instead of simply drawings and photographs that you have here. Here all the building trades were represented, the electrical interests and the various underground and overground building operations as far as they can be represented in machinery equipped with safety devices. I asked myself who places all this expensive machinery on exhibit here? did the state buy it? No, the manufacturer placed it there with the safety devices, and the safety devices are a recommendation for his machinery to the prospective buyer.

There you have an illustration of self interest. Self interest in that safety devices are attached to machinery for the purpose of recommending that machinery and promoting its sale. I mention that merely incidentally because if, on the one hand, there is a magnificent movement in the interest of humanity there is also a propelling power which is centered in self interest, and so that self interest can be made to promote this great cause, and no doubt will assert itself in due time in this state and wherever the movement has been put forth.

I want to say in conclusion, Mr. President and Gentlemen, that I, for one, congratulate the men who have identified themselves with this work—the men who have come here to exchange ideas and

to sift out the best in order that this work may progress, that it may develop, that better results may be achieved. The movement is in its infancy, and much is to be accomplished, but I say to you now that you ought to be cheered on in your work and that the manufacturer who has a spark of humanity in him, who recognizes that after all, common humanity demands it and that he will be better off economically, should put his shoulder to the wheel and help the movement to grow. To the end that it may grow, to the end that it may be successful, let me say that the manufacturers of this city are heart and soul with you. They want you to continue your investigations, your studies; they simply want to be shown. They want you, as the experts, to show how accidents may be minimized, and how this great movement with which you are identified may be promoted and carried out to its highest degree of usefulness and success.

DISCUSSION

W. L. O'BRIEN, Chief Factory Inspector of Kansas: Mr. Chairman and Gentlemen: In Kansas the Labor Commissioner is also chief factory inspector, but, different from any other state, he is elected by a society called "The Society of Labor and Industry." He is the secretary, and the assistant secretary is elected every two years as the assistant labor commissioner. He is practically elected by organized labor, and appoints the members of his office force and the factory inspectors from the ranks of organized labor. As a rule, no politics enter into the case.

This morning Dr. Holmes was speaking in regard to the miners. The mine inspection department is a separate department in Kansas. In 1907 a law was passed compelling all mines to have bath houses, steam heated, with lockers for clothes; another law was passed compelling the mine telephone. This is installed and runs along the top of the ground and runs through a tube to different parts of the mine so in case of an accident like the Cherry disaster in Illinois they can locate the men. In regard to explosives there is the right to demand a change of powder on two weeks' notification.

The Labor Commissioner, the factory inspector, have the en-

forcement of about fifty-four laws, such as the eight hour law in regard to public work, safety appliances, the child labor law, fire inspection on public buildings and fire escapes on buildings three stories in height. As to the child labor law: We don't allow children to work under fourteen years of age. Over fourteen, and between the ages of fourteen and sixteen they can work at any occupation that is not dangerous to health, life, limb or morals, but can only work eight hours. To work in a factory where there is machinery they have to be sixteen years of age.

Kansas not being a large manufacturing state has not the number of factories to inspect that there is in some of the other states. Still there are some large plants, like the packing houses and cement plants, but we haven't much bother lately with the large corporations. For instance, the Santa Fe shop at Topeka employs thirty five hundred men. About two years ago they started to safeguard the various machines, and I want to tell you that to-day it is one of the best guarded shops in the United States, and the foreman or the superintendent of that shop notifies our department that if there is anything we think it is necessary to guard he will have it done immediately.

We also have the regulation of sanitary conditions for workers, especially women. I can remember years ago in the packing houses when the toilet room for women was stuck up in the killing floor and instead of having a door on it there was just a set partition on a plank and the stool was a two by four, with matched boarding under it. At the present time we have separate toilet rooms and shower baths, a dining room with benches and tables, and lockers for clothes, all enforced through our department.

In regard to the inspectors: For instance, the gentleman from Minnesota said something about having a chief inspector. The inspectors in Kansas change their territory. One inspector may become good along certain lines and look especially for certain points; another may be good in other lines; they exchange territories and in that way they get them in pretty good shape. I have one corporation in Kansas City, the Griffin Car Wheel Company, and they have a system that is a very good one. They have what they call a committee on safety appointed from the different parts of the shop. Anyone working in the shop can report to them any machinery that they think is dangerous or needs safeguarding. They

meet once a month and the company pays them for their time when they meet, they thrash this matter out and then recommend to the superintendent what they want done, and they tell me it is done.

One thing that has been of great benefit to us is the bulletin issued by the Wisconsin Industrial Commission. The first bulletin they issued put us in touch with safeguards we didn't even know. Our law is drastic and we can enforce it without any bother. The power of the office in that regard has never been questioned. We simply make a recommendation and it goes through without any trouble at all. The only difficulty is that our knowledge of what safety appliances and safeguards are necessary, is not fully developed, and, as I said before, the bulletin issued by the Wisconsin Commission was an eyeopener in regard to some machinery. (Applause.)

Mr JOHN P. GARDNER, Assistant Labor Commissioner Minn.: Mr. Chairman and Gentlemen: A great deal has been said by the different speakers this afternoon in regard to the factory inspection feature and the policies of the departments of different states, much has been said of what should be done, but there is one thing that has been overlooked and that is what are we going to do with the workman, or the man in the shop, that refuses to use the safety device after he has been provided with it by the employer? That one point alone has given us more trouble in the state of Minnesota than anything else. The laws that we have on the statute books were created for the protection of these men, and yet they are the very ones in lots of cases that refuse to use the appliances after the law has compelled, or the employer, through instincts of humanity, has supplied them with those safety devices.

As to the disciplining of the men, it is easy to talk about that matter, but the next thing is to put it into practice without injuring the industry to the extent of curtailing its output. A manufacturer of the state of Minnesota told me in 1904 that one of his men had refused to use the safety device provided for him on a woodshaper, declaring that it was impractical and interfered with his work. He said: "I don't know what to do." I told him that that man, no matter how efficient and how able he was, if he

refused and disobeyed the rules of the firm on one occasion, was a menace to it and set a bad example to others. I believe that any employer can find just as good a man for any class of work as he may have in his industry. I don't care what it is. I know it is true in the machinist trade. I followed it all my lifetime, and I know there are just as good machinists anxious to get positions as those that are working to-day, and there is no man's work but what can be done by somebody else just as well and the only way I can see to compel the workmen themselves to use the safety devices provided by the employer is to let them understand that unless they do use those devices their pay envelope and their time is waiting for them in the office.

I haven't very much time to talk, but I want to say this, that in season and out of season I have always advocated the elimination of politics from state factory inspection departments. If the states that haven't that form of law get down to a system whereby the inspector will retain his position solely upon his merit, and have every applicant pass a competitive examination, they will take a step in the right direction. It is not very much encouragement for an inspector to devote the best of his time to studying and working out problems and trying to find the intrinsic value of safety devices when he knows that probably at the end of two years, after he has cracked the nut shell, somebody is coming in to get the meat out of that nut. Minnesota is one of those states in that condition. Our factory inspection department is solely and absolutely dependent upon the political patronage that the governor of the state sees fit to distribute, and under one administration of the state labor department there wasn't one practical man for four years in the service of the state factory inspection department. One employing tailor was chief factory inspector. A cigarmaker was an inspector, and a railroad brakeman an inspector, and I want to tell you, gentlemen, that when such men as these go into the plant of a manufacturer who knows his business and knows that the inspector does not, that he does not know whether a drill press is a lathe upside down, or anything else, he hasn't much confidence in him, and the progress of safety is not going to advance under those conditions.

In our state, through the co-operation of the manufacturers in the last two years, we have accomplished a great deal of good work,

and we have not had to resort to the courts in but two instances in order to compel compliance with the laws and the suggestions issued by our inspectors. I always maintained that it should be absolutely unnecessary to have any laws on the statute books of any state to compel the manufacturers or employers to provide safety devices for their machines. In the last twenty-three months, closing June the 30th, the number of factory inspectors' orders—which means a court case if they are not complied with—issued for guarding machinery was 660, and to provide additional fire escapes, fire extinguishers, etc., for fire protection, was 49. The number of written suggestions issued in that same period of time for guarding machinery was 5,913, to provide additional fire escapes, extinguishers, etc., for fire protection, was 870. The suggestions to guard, as itemized, to cover or remove exposed set screws, 901; guarding or covering belts and pulleys, 833; guard or cover gears or couplings on shafting, 704; guard chains or rope drives, 129; guard or cover conveyers in grain elevators and some mills, 115; place guard around fly wheels on engines, 350; guard or rail electric motors, 159; guard and reduce speed of emery wheels, 578; guard band and circular saws, 540; guard planer, joiner and shaper, 285; guard drill presses and punch machines, 279; guard gears on lathes, 152; cover or guard extractors, manglers, and other machinery 264; printing presses 129; guard other machines 885; provide signal devices on motive power, 30; rail or guard electric switch and switchboards, 90; put up danger sign or signal or paint safety devices red, 34; provide blower and exhaust system on machines, 34—(That is in the linotype machine industry, printing industry, where the linotype machine is used.) Put working tools, the heads of hammers, chisel, etc., in proper condition—and I want to say here this is a feature in factory inspection that has been very much overlooked in late years, the condition of the tools in the blacksmith shop. Since we have taken up that feature of it in connection with our other factory inspection work we have had a less number of accidents to the eye in Minnesota in the last twenty-three months as compared with any like period in the history of the state. There is no necessity for a blacksmith to have any tools with a mushroom head. If he hasn't any respect for and doesn't want to save his own eye, at least he should be made to respect the value of other people's eyes.

Through the Safety Conference called in Minnesota last winter we have secured the co-operation of the Northern Pacific Railroad, the North-Western, known in St. Paul as the "Omaha" road, the American Hoist & Derrick Company, the Steam Laundrymen's Association, the Oliver Iron Mining Company up on the Ranges, the Manufacturers' Association, Employers' Association of Minnesota, the Minnesota Steel & Machinery Company, the flour mill industry, and numerous others. Prior to that Safety Conference in Minnesota last December it was practically impossible to get the flour mill industries to do anything with a degree of proficiency, anything along the lines of safeguarding their machinery. Until that Safety Conference it was absolutely impossible to get quite a number of lumbering plants in the state of Minnesota to do any thing with safety in their plants unless we kept after them all the time.

SAFETY AS INSURED BY SYSTEMATIC FIRE AND PANIC DRILLS

LEWIS T. BRYANT, Commissioner of Labor, New Jersey

The illustrated lecture given by General Lewis T. Bryant, Commissioner of Labor, for the State of New Jersey, outlined the activities of the department in connection with the protection of factory operatives from the danger of fire by means of adequate methods of egress, electrical system of alarm to advise them of the existence and exact location of fire, and the fire drill for the purpose of emptying the factory without panic. The work within this State was traced from the unfortunate High St. fire in Newark, N. J., during the latter part of November, 1910, to the present time. The lesson of the catastrophe, together with the Asch building fire in New York which followed it within a few months were graphically drawn, and the improvements required by the department to prevent a recurrence of a similar disaster were illustrated by actual photographs taken from buildings within the State of New Jersey. The development of the present standard fire escape, which is now adopted by the Department of Labor, was illustrated progressively commencing with the fire escape which was constructed on the High St. building under the old law up to the fire-proof and smoke-proof

tower with outside entrances which is now being encouraged by this department. The standard New Jersey fire escapes are generally recognized as among the highest type fire-escape construction adopted by any State in the Union, and the balanced stairs of the cantilever type connecting the lower balcony with the ground where the landing is made over a public highway or private driveway has received wide spread commendation.

Photographs illustrating the advantages of fire-proof doors and windows which open upon or directly under fire escapes were shown; clearly indicating the manner in which this type of construction converts what is commonly known as a human gridiron into a safe method of egress from the building.

The Commissioner explained the fire-proof and smoke-proof tower with outside entrances, which he believes should generally be used on all new buildings, and some old buildings, instead of the outside fire escape.

An explanation was made of the excellent work the department is accomplishing in reviewing the plans of new factory buildings which must be approved by the Commissioner of Labor before erection.

The speaker impressed upon his audience the fact that the efforts of the Department of Labor were along the lines of preventing fire rather than simply inaugurating a system to be undertaken in the event of fire.

The very unique practice of having local factory chiefs appointed from among the employes was explained, and it was stated that up to the present time about 300 factories had responded to the request of the Commissioner of Labor by nominating factory chiefs. This practice has never been attempted in any other State, and has received the unanimous endorsement of factory owners.

The duties of the factory chief are to have direct charge over the electrical system of alarms, fire fighting apparatus, local fire brigades and fire drills. It is his further duty to make daily inspections of the factory for the purpose of promoting cleanliness and generally establishing conditions which will be calculated to prevent fire. It is the further thought of the department to have this supervision extended to matters which pertain to the safeguarding of operatives from preventable factory conditions, such as improperly protected elevator shafts, unguarded machinery and like hazards.

It has been found that safeguards are frequently provided but their efficiency is prevented by reason of the fact that they are at times permitted to become out of order, or their use discontinued. An active factory chief could prevent a continuance of this condition and by doing so he would serve not only the interests of his fellow workmen, but the interests of his employer as well.

The lecture was terminated with a moving picture of a fire drill as conducted in two manufacturing establishments in this State. The moving picture included two factory fire brigades in operation. The operatives were shown at their work benches, and it was demonstrated how a six story building could be emptied of 800 operatives—mostly women—who would be taken directly from the building and later returned to their work rooms in the space of approximately five minutes.

An excellent example was given of the efficiency in which factory fire brigades can be developed, and some very illuminating statistics were given of actual cases of property which had been saved through the use of organized fire brigades. One manufacturing concern advised that two disastrous fires occurred at their plant, one of which cost approximately $160,000, and the other approximately $15,000; after the occurrence of these fires a local fire brigade was organized, and since that time they have responded to some thirty fires in their own plant and three fires for outside factories. The fire loss now averages from $2.50 to $150, and it was stated by a representative of this firm that had it not been for the efficiency of their local fire brigade fully 25% of these fires would have gained serious headway.

Throughout the entire lecture the Commissioner of Labor endeavored to point out the fact that it was the desire of the Department of Labor to acquire such an enforcement of the labor laws in a manner calculated to provide adequate protection to the employees, and at the same time cause the manufacturers as little expense as conditions permitted, and further to secure as much benefit as possible to the manufacturer.

The Chairman: I am sure we have all appreciated very much General Bryant's lecture. I know it has been extremely interesting to me, and I believe it has been to each one of you.

MINES SESSION

Chairman. Dr. JOSEPH A. HOLMES, Director Bureau of Mines.

Opening Remarks"

Mr. HERBERT M. WILSON, Engineer in Charge Experimental Station, Pittsburgh, Pa.

System of Safety Inspection of the Cleveland-Cliffs Iron Co."

WILLIAM CONIBEAR, Department of Safety, Cleveland-Cliffs Iron Co.

Safety Measures in Mines of Central Pennsyvania."

M. G. MOORE, Mining Engineer, Cambria Steel Co.

"Safety Measures in the Rocky Mountain Mining District,"

J. C. ROBERTS, Mining Engineer, Denver, Col.

"Safety Devices on Mine Hoists,"

F. H. ARMSTRONG, Mechanical Engineer, Penn Iron Mining Co.

"Safety Measures in Mines in the Southern Appalachian District,"

F. H. CROCKARD, Vice-President, Tennessee Coal, Iron and Railroad Co.

"Safety Measures in the Bituminous Coal Mines of Western Pennsylvania,"

HERBERT M. WILSON, Engineer in charge, Experimental Station, Pittsburgh, Pa.

"Safety Measures in Coal Mines of Illinois,"

PROF. H. H. STOEK, University of Illinois.

MINES SESSION

Presiding Officer: Mr. HERBERT M. WILSON, Engineer in Charge Experimental Station, Pittsburgh, Pa.

The Chairman: Gentlemen, I am asked to call this session to order, to proceed in the absence of Dr. Holmes of the United States Bureau of Mines, who found himself so unfortunate as to be here only for one day and had to leave last night after the Federal Session.

I am not going to burden you with any lengthy opening remarks. I am sure we all know what we are here for. The question of safety in mines is one which all of those present, being mostly mining men, I see, are thoroughly familiar with. You all know already of the tremendous string of deaths and of disabilities due to disasters of one kind or another in mines, and of the efforts made toward the prevention of these accidents by the mining companies, and any speech I might have wanted to make would have been to a miscellaneous audience in praise of the splendid work done by mine operators in particular. The tremendous amount of energy, money and time they have been putting in, in the last few years toward reducing the number and character of the accidents in their mines would be a superfluous story to you. Go where you will among mining operations to-day and if the company is big enough you will find a safety organization. You will find special employes whose sole duty is looking after the safety of the miners and the outside laborers, and there are committees on safety of various kinds. My name appears later on the program which we will now continue with the first paper by Mr. William Conibear of the Cleveland-Cliffs Iron Company.

SYSTEM OF SAFETY INSPECTION OF THE CLEVELAND-CLIFFS IRON CO.

By WILLIAM CONIBEAR, Ishpeming, Mich.

Mining is a hazardous occupation and it is especially true of mining in the Lake Superior region. Its ore deposits are very irregular in shape and are being extracted at depths which are the deepest that have been attained by man in his exploitation of

the earth's resources. The introduction of economical devices and the utilization of power have characterized our industry from its earliest stage to the present time, but the wonderful increase in efficiency of labor which has resulted thereby does not obliterate the fact that the workman of to-day is subject to more numerous hazards than was the workman of twenty-five years ago.

Mining men of the Lake Superior district have been cognizant of the high fatality rate of our industry and have endeavored to interest the state in the solution of the problem of preventing accidents. From time to time papers have been published which treated this subject but there has been no united effort on the part of the operators or co-operation by the state to lessen danger. The ethical aspect of the problem has received attention and the States of Wisconsin and Michigan have enacted Workmen's Compensation laws and Minnesota has an act under consideration at the present time. The economic phase of mining, however, has been paramount and there has not been the amount of attention devoted to safety that it is justly entitled to. As a consequence the fatality rate has not shown a marked reduction nor does it compare favorably with the fatality rate in other mining districts of the country. It must be acknowledged that progress has been made in improving conditions in and about the mines, but much remains to be done to reduce the high fatality rate of the past to at least one that, by comparison with other important mining countries, will not reflect seriously upon our mining methods and conditions.

Because the state failed to meet the demand for more adequate mine inspection but left it to each mining company to solve the problem, The Cleveland-Cliffs Iron Company organized what has been designated its Safety Inspection Department. This department has been in existence about 18 months, a period of time inadequate to permit a comparison of results, but there are on record a number of serious if not fatal accidents that have been prevented by the safety measures introduced since its organization. There has also been a material reduction in minor accidents.

Rules and Regulations*

The interest and co-operation of the employe must be aroused and maintained to secure the greatest degree of safety and the

*The rules adopted by the Company are based upon the report on Uniform Mining Laws made on September 1st, 1910, by a committee consisting

foundation for these conditions is being laid by a system of education that aims to develop individual responsibility. As one means of insuring safe working conditions and for the purpose of assisting its employes to exercise safety precautions, The Cleveland-Cliffs Iron Company has published a book of rules and regulations. This book has been issued in two forms, one for superintendents and foremen and one for all other employes. The first is printed in English and is in two parts; one includes a foreword from the president of the company and the rules and regulations for superintendents and foremen, and the other part includes the general rules and regulations. The second form is printed in English, Finnish and Italian, which are the several languages spoken by a large majority of the company's employes, and includes a foreword and general rules and regulations. Every employe receives a book and his signature for the same and agreement to study and live up to it is filed at the central office of the company. Within a reasonable time he must satisfy his foreman or boss that he is familiar with the rules of the company. The first violation may be sufficient cause for a suspension of six days or longer and a second is usually followed by dismissal from the company's service.

It has always been a rule of the company to post in conspicuous places copies of the bell signals, the special rules which govern the use of explosives, and the duties of hoisting engineers and motormen It is not necessary to add that this practice is still in force.

Safety Inspector

The safety department is in charge of a safety inspector whose reports are submitted to the company's agent to whom he is responsible for a conscientious performance of his duties. An inspection blank has been prepared which provides for an investigation of all places where men are working or through which they are obliged to travel. The blank is subject to amendment, and the inspector is at liberty and is expected to report all dangerous conditions that come under his observation and which may not be brought out by

of Walter Benton Ingalls, Chairman, J. Parke Channing, James Douglass, James R. Finlay and John Hays Hammond, to the American Mining Congress, American Institute of Mining Engineers, and the Mining and Metallurgical Society of America, with such modifications and additions as found necessary for their mines.

the questions embodied in the blank. A proposed inspection of a mine is not announced and therefore no opportunity is given the men in charge to make changes that may be necessary to meet the requirements of the rules. As failure on the part of the inspector to report impartially all violations of rules or dangerous conditions would frustrate the very object of his official existence, this method of inspection is one that stimulates a foreman to keep the mine in such a condition at all times as to comply with the safety rules and keeps him alert for unsafe or unguarded places. The inspection form and the examinations by the foremen's and workmen's committees give the inspector no opportunity to offer a plausible excuse if he has been derelict in the discharge of his duties.

Foremen's Safety Committee

Safety inspections are made periodically by a committee of mine foremen, consisting of three members, who are selected from different mines of the company. The committee is instructed directly by the agent and each member is furnished a copy of the questions, which form the inspection. The safety inspector accompanies the committee on its tour of inspection, in the capacity of secretary. He has no voice in the decisions, which the committee may reach, but has to record them and incorporate them in a report, which is read very carefully by each member of the committee before he attaches his signature thereto and permits it to be transmitted to the agent. The committee makes one inspection of all mines and is then discharged.

An inspection of this kind may be the means of suggesting points of possible danger that might otherwise pass unobserved by a safety inspector, and it assures to the company the experience and judgment of men who should be best qualified to recognize dangerous conditions and unguarded appliances. During the brief life of the safety department of The Cleveland-Cliffs Iron Company the members of the foremen's committee without exception have esteemed it a special favor to make a safety inspection and have gladly accepted the opportunity of being a factor in providing greater safety for their fellow workmen as well as for themselves. It is a trait of human nature that whenever rules and regulations, which affect a body of men as individuals and as a whole, are formulated, to evince a curiosity as to how the "other fellow" is obeying them. And when the members of a committee learn that

the safety precautions, enforced in the mines at which they are employed, are but a part of a system in vogue at all mines, they conclude the movement is one that has come to stay and that it behooves each one, individually, to fall in line and keep up with the "other fellow."

Workmen's Safety Committee

A method of accident prevention is not complete unless it aims to win the confidence and co-operation of the workmen, and with this object in view the company has its workmen's safety committees. These committees work in conjunction with the safety inspector and the procedure of preparing a report is similar to that of a foremen's committee with one essential difference and that is that each mine is inspected by a committee of its own workmen, whereas one foremen's committee makes an inspection of all mines. Workmen of different nationalities are chosen, and each successive inspection means three additional employes at each mine, who have given the working conditions of that mine their approval or else have offered recommendations to lessen danger. There are many foreigners employed in the mining industry, who speak little or no English, and it is interesting to observe the curiosity which they frequently exhibit when a fellow countryman happens to be a member of the safety committee. When the mission of the committee has been duly explained then the workmen must satisfy the members of the committee that they are complying with the rules and regulations by producing cap crimpers and skewers, by showing that detonators are stored apart from dynamite, etc. Thus the workmen are brought to understand the safety precautions which the company is exercising and habits of indifference and recklessness are supplanted by habits of interest and caution.

Central Safety Committee

The central safety committee is composed of the company's mine superintendents of Marquette County, the head mining captain, the master mechanic, the assistant auditor, the secretary of the pension department and the safety inspector, with the agent as a member ex-officio. This committee meets monthly, and acts as a legislative body on all safety recommendations which may have been offered by the foremen's and workmen's committees and the safety inspector and to the application of which objection has been raised. A

majority vote of the committee is recorded, and as such is communicated to the agent as the recommendation of the central safety committee. As soon as it is approved by the agent it must be enforced. If a recommendation is considered of sufficient importance to justify a special rule that shall have general application at all mines it is accepted as such and is accordingly classified under the heading "New Rules." In short, all matters of safety, the expediency of which gives rise to difference of opinions, are referred to the central safety committee for decision. The committee receives reports of all accidents, whether fatal, serious or slight, which have occurred during the previous month, and classifies them by causes, using for its classification a key which was obtained from Mr. R. J. Young, Manager, Department of Safety and Relief of the Illinois Steel Company and which is herewith printed by his permission. Preventable accidents are carefully considered and recommendations are suggested for preventing their recurrence.

First Aid to the Injured

It is hardly necessary to call attention to the value of first aid to the injured, but its importance cannot be overestimated. Even if the day of preventable accidents were a thing of the past, non-preventable are inevitable. Especially is this true of a trade as hazardous as iron ore mining, with its deep mines and constantly increasing mechanical appliances. In certain mines in Pennsylvania first aid instruction and that alone has resulted in reducing sick and death benefits 50 per cent. A simple fracture may become a compound fracture if the patient is not properly handled, and hence an accident which requires a few weeks of comparatively painless healing becomes one that lengthens into a much longer time of confinement, with considerable danger of death if wound infection develops. This is an illustration of but one kind of injury which frequently occurs in mining and is cited merely to emphasize the value of having workmen around the mines, who have a practical knowledge of the essentials of first aid to the injured. The Cleveland-Cliffs Iron Company's first aid organization and training was started under the instructions of an employe of the Bureau of Mines, whose services were obtained for a month. During this time a number of employes become competent to continue the work. A corps of five members, consisting of both

surface and underground employes, is under training at each mine. Each member is furnished with a copy of the American Red Cross "Text book on First Aid". A drill is held regularly each month and individual and team work are the features. Demonstrations in which all teams participate are held as soon as the teams under training become proficient. When the members of a corps become competent to administer first aid treatment, a new team is selected and each member of the retiring team is given a certificate of competence to administer first aid to the injured, with the stipulation that he must undergo additional training every six months.

Mine Rescue Stations

The Cleveland-Cliffs Iron Company has established three mine rescue stations which are equipped with oxygen helmets, electric portable lamps, pulmoters and quantities of supplies. In addition to a pulmotor at each of its rescue stations, the company has one at those mines which are located several miles distant from a station. A man is delegated to look after each station and train men at all mines which are assigned to his station. Employes, who are familiar with the working places of the mine in which they work, such as foremen, timbermen, trackmen, etc., are chosen as members of the fire corps. The training consists in explaining the apparatus to the men, putting it on them, sending them in stopes or drifts after a blast, building brattices, carrying men, and such other work as might be expected in an actual case of fire. Each corps is drilled at least once a month and a record is forwarded to the central office of the company. A monthly report of the condition of the equipment at each station is made out by the foreman in charge and is also sent to the central office.

Classification of Mine Accidents

I. Trade Risks. (Incidental & Non-Preventable)

II. Negligence of Company:

1. Failure to use Safety Devices Provided.
2. Failure to use Proper Tools or Appliances Provided.
3. Violation of Rules.
4. Improper Act or Selection of Improper Method of Doing Work. (By Foreman)
5. Failure to Instruct Men as to Method of Doing Work and Hazards Incident thereto.

6. Failure to Provide Safety Devices.
7. Failure to Provide Proper Tools, Appliances or Place to Work

III. NEGLIGENCE OF WORKMEN:

A. Injured Men
(1 Failed to use Safety Devices Provided.
(2 Failed to use Proper Tools or Appliances Provided.
(3 Violation of Rules.
(4 Improper Act or Selection of Improper Method of Doing Work. By Workman)

B Other workmen
(1 Failed to use Safety Devices Provided.
(2 Failed to use Proper Tools or Appliances Provided.
(3 Violation of rules.
(4 Improper Act or Selection of Improper Methodi of Doing work. By Workman)

THE CLEVELAND-CLIFFS IRON COMPANY
MINING DEPARTMENT
SAFETY INSPECTOR'S REPORT

.....Mine Date.....

(Sections and Rules quoted in this report refer to the Proposed Uniform Mining Laws.*) Answers must be made to the following as to the safety and health of the employes and suggestions must also be made for any improvement or betterment of conditions.

Surface—

1. What are conditions of roadways on Company's property over which workmen are obliged to travel to reach place of work?
2. Are such roadways properly lighted?
3. Are railway tracks used as roadways and cannot other ways be provided?
4. Are all pits, caves, disused and abandoned shafts properly protected?
(Rules 23-24)

*American Mining Congress, Vol. XIII—No. 9. Published at 1510 Court Place, Denver, Colorado.

Change House—

1. Is dry lighted by kerosene or electric lights?
2. Is dry sufficiently lighted?
3. Are accommodations ample for men employed at the Mine?
4. What protection for safety from fire is provided?
5. Is fire protection kept in good order?
6. What are the sanitary conditions?
7. What accommodations and appliances are provided for injured persons? (Sec. 21)
8. How many fire fighting helmets are provided? (Rule 6)—and where kept?
9. Are the same kept in good order?
10. Are there men around the mine who understand the first care of injured men and the use of fire fighting helmets?

Shafts—

1. Is protection at collar of shaft sufficient and in good order? (Rule 51)
2. Is opening to shaft at timber tunned properly protected and in good order?
3. Is protection at shaft stations sufficient and in good order? (Rule 50)
4. Are there skip tenders and at what levels? (Rule 7)
5. Is there a cage rider?
6. What tools are allowed with men riding in skip, cage or bucket? (Rule 8)
7. Are projecting tools properly lashed to hoisting ropes? (Rule 9)
8. How often are timbers in manways cleaned? (Rule 22)
9. Are they in good condition?
10. Are working stations sufficiently lighted? (Sec. 26)
11. Are there passageways at all levels around hoisting compartment? (Rule 44)
12. Are the same in good condition?
13. Are there guides for the bucket?
14. What style of crosshead is used? (Rule 15)
15. What clearance is provided on guides?
16. Is stopper securely fastened to hoisting rope at least seven feet above rim of bucket. (Rule 15)
17. Are guides and crosshead kept in good condition?

18. Is there more than one outlet to surface?
19. Are there connections between levels other than the main shaft? (Sec. 38)
20. Is the second outlet kept in good condition? (Sec. 38)
21. Is condition of pipes, electric wires and conduits safe?
22. Are steam pipes covered or protected from accidental contact?
23. Is the general condition of the compartment through which men are hoisted safe for men as regards to lagging, timber. guides, etc.?

Sinking—

(When more than one shaft is being sunk, separate report must be made for each.) The following questions apply to sinking new shafts and also deepening shafts.

1. In lowering, is bucket stopped 15′ above the bottom of shaft? (Rule 10)
2. Is shaft suitably covered while sinking is going on? (Rules 11-12-13)
3. Are only safety hooks used for bucket? (Rule 14)
4. Are there ladders reaching to the bottom of shaft while sinking? (Rule 42)
5. State what kind of ladders and if in good condition?
6. Is bell rope within reach of men in bucket at bottom of shaft?

General Mining—

1. Is general condition of timbering or other means of support throughout the mine satisfactory? (Sec. 12)
2. Are mine maps clear and accurate for purpose of inspection? (Sec. 22)
3. Are all dangerous places fenced off? (Rule 4)
4. Are proper danger signal boards displayed at all dangerous places? (Rule 4)
5. Are candles or lamps left burning after shift? (Rule 5)
6. Are sumps securely planked over? (Rule 45)
7. In passageways, are roofs and walls securely lagged? (Rule 46)
8. Are winzes and raises in direct line of drift? (Rule 47)
9. Are winzes, raises and open stops properly guarded? (Rule 48)
10. Are ladderways in winzes and raises located in drifts properly protected by hatches? (Rule 49)

11. Are all chutes in winzes and raises properly protected by gratings?
12. Is proper provision made for safety of men working at chutes?
13. Are the communications between contiguous mines in good condition? (Sec. 39)
14. What is the condition of ventilation in different parts of the mine? (Sec. 43)
15. Are sufficient dry closets maintained? (Sec. 44)
16. While the responsibility for the safety of the roof and walls in the individual places is upon the workman, are the same also inspected by superintendent, captain and shift bosses, and how often? (Sec. 45)
17. Are the rules for safety pillars on boundaries observed? (Sec. 46)
18. In approaching workings known to be flooded are proper precautions taken? (Sec. 37, Rules 32-33-34)
19. Complaints from workmen—report if any?

Main and Sub-levels

1. Are levels and sub-levels properly ditched to prevent water from accumulating, making passage unsafe?
2. Are there any other conditions which might be dangerous for passageway for men?
3. Are tracks and switches in safe condition?
4. Is condition of wiring safe?
5. Is condition and arrangement of piping safe?
6. On haulage roads, are drifts properly lighted? (Rule 26)
7. On all main drifts is there a manhole or refuge every 100 yards? (Rule 28)
8. Are they kept clear?
9. Are the rules governing the employment of motor and brakemen carefully enforced?
10. Are the rules governing the operation of electric motors strictly enforced?

Explosives—Manner of Handling—

1. Are explosives stored on surface and is Section 25 strictly complied with?
2. Are caps stored on surface, and where?
3. How often are explosives taken into mine?

4. Are packages of explosives plainly marked, giving date and strength, also name and place of manufacture? (Sec. 26)
5. Is there more than 72 hours' supply of explosives stored in one place in the mine? (Rule 25)
6. Is the same stored 50′ from any other supply of powder? (Rule 25)
7. How is dynamite thawed? (Rule 57)
8. Is the method employed safe? (Rule 57)
9. Are conditions as to blasting complied with? (Sec. 30, Rules 56 to 65)
10. Are the rules posted in conspicuous places?
11. Do men in preparing dynamite for blasting always use skewers and cap crimpers?
12. Before blasting are the necessary warnings given?

Ladderways—

1. Do rungs of ladders exceed 12″ apart? (Rule 35)
2. Are ladders placed 3″ from wall of shaft or other opening? (Rule 36)
3. Are there platforms for ladders at least every 24′? (Rule 37)
4. Are there manholes for ladders? (Rule 38)
5. Do ladders project at least 3′ above collars, or are hand rails provided? (Rule 39)
6. Are any ladders inclined backwards from the vertical?
7. Are rungs made of wood and iron?
8. Is there a complete ladderway from the lowest workings to surface? (Sec. 42)
9. Is there any loose rock or timber left at the top of ladderways, where it might accidentally fall or be pushed into same?
10. Are ladders and ladderways kept in good condition?
11. How often inspected?
12. Are stairways kept in good condition?

MECHANICAL

Hoisting—

1. Have printed rules, Sections 31 and 32, governing duties of hoisting been furnished to hoisting engineers and receipt taken for same?
2. Are Sections 31 and 32 covering duties of hoisting engineers properly posted? (Sec. 32, Rule 14)
3. Are they maintained in good condition?

4. Is speed of hoisting and lowering men over 1000′ per minute? (Sec. 32, Rule 8)
5. How often are machinery and safety appliances inspected? Sec. 32, Rule 9)
6. Are cages, skips or buckets used for hoisting men, inspected daily? (Sec. 34)
7. Are the cages properly enclosed and protected?
8. Are signals in good order, is there a duplicate system of signals? (Sec. 37, Rules 16-17)
9. Is signal code posted in engine house and at each level? (Sec. 37, Rule 21)
10. Is moving machinery properly guarded? (Sec. 35)
11. Is hoisting plant equipped with an overwinding device?
12. Is the same in good working order?
13. Are safety devices tested once each month by the superintendent and inspector jointly?
14. Are hoisting ropes running through engine house protected for safety of men?
15. Are unnecessary persons excluded from the engine and boiler houses? (Sec. 32, Rule 5)

Hoisting Ropes—

1. Are ropes inspected every 24 hours? (Sec. 33)
2. What is the present condition of rope?
3. How often is section of rope tested? (Sec. 33)
4. When rope is lowered to bottom, are there two full turns left on drum? (Sec. 37, Rule 53)
5. Is the further end of rope secured by six clamps or bolts? (Sec. 37)
6. Is rope treated with suitable oil or compound monthly? (Sec. 37, Rule 55)
7. How is lubricant applied?

Surface—

1. Are sheave stands and sheaves in shaft houses easily accessible and arranged for the safety of the men whose duties require them to oil and repair the same?
2. Is the machinery and belting in shops properly protected for the safety of employes and others?
3. Is fire pump hydrant equipment provided for fire protection, ample?

4. Is the quantity of fire hose provided, ample?
5. When last inspected?
6. What is condition of same?
7. Where are lubricating oils and greases stored?
8. Is storage place kept in safe condition?
9. Where are kerosene or inflammable oils stored?
10. Is storage place kept in safe condition?
11. Are hoisting ropes, guy wires and piping on surface properly protected?
12. Is protection for safety of employes and others during construction and repair work?

Boilers—

1. Are safety devices provided for boilers, kept in good working condition?
2. Are general conditions in boiler house safe?
3. How often are boilers inspected by insurance companies?
4. Are their recommendations promptly complied with?
5. Are all steam pipes covered or protected from accidental contact?
6. Is boiler room properly lighted?

Engine House—

1. What is the condition of piping and general equipment as regards safety?
2. Is engine room properly lighted?
3. Is basement of engine house used for storage of material?
4. Is the same arranged for safety to men?

Compressors—

1. Is moving machinery properly guarded? (Sec. 35)
2. What is condition of piping around compressor as regards safety?

Electric Engines and Dynamos—

1. Is moving machinery properly guarded? (Sec. 35)
2. Is switchboard railed off to prevent handling by outsiders?
3. Are all wires carefully strung to prevent accidental contact?

Pump Stations—

1. Is moving machinery properly protected?
2. Are all electric wires safe?
3. Is station properly lighted?
4. Are steam pipes properly protected from accidental contact?

Top Tram—

1. Is moving machinery properly protected?
2. Is wiring properly protected?
3. Are counterweights safe?
4. Are walks and hand rails provided on permanent trestles?
5. Can the conditions for safety of men be improved?

Crusher—

1. Are belts and shafting properly protected?
2. Are proper railings provided for all walks and openings?
3. Are electric wires properly protected?
4. Are stairs and ladders in safe condition?
5. Are all oiling places safely accessible?

Steam Shovel—

1. Is all moving machinery properly protected?
2. Are all gears covered?
3. Is shovel in good condition for the work being done?
4. Are runways and stands protected by railing?
5. Is proper care taken to prevent trestle legs from falling and injuring workmen?

General Applications—

1. Are accidents to persons and equipment reported promptly?
2. Are occurrences of fires, floods, extraordinary caves, and similar accidents, dangerous to life or health, reported promptly? (Sec. 12-16)
3. Do superintendents, captains and shift bosses, instruct employes as to their responsibility?
4. Is discipline strict or lax?
5. Are persons allowed in or around mine except by permission? (Rules 66 to 70)

SAFETY MEASURES IN MINES OF CENTRAL PENNSYLVANIA

Mr. M. G. Moore: Mining Engineer, Cambria Steel Co.

Mr. Chairman and Gentlemen: I do not know that I can say very much that has not already been brought out at some of the meetings and that will not be brought out later in some of the other papers. There is not much difference between Western Pennsylvania and

Central Pennsylvania. I can only say that the methods of prevention of accidents from falls of roof and coal are the same in both places, since the new mine law went into Pennsylvania, which was the mine law approved June 11, 1909, and which provides that there must be enough assistant formen in each mine to visit every working place twice a day, it has brought about beneficial results. It required us at one of our largest mines to put on eleven assistant mine foremen.

I was disappointed in the results financially. I find that the assistant mine foremen look after the safety of the men entirely. They devote their entire attention to it, you might say. They scarcely pay any attention to getting out the output of the mine and seeing that it is gotten out as cheaply as possible. We are disappointed in that end of it, but we are pleased in the end that it has a beneficial effect on the reduction of accidents. It is bound to.

The greatest difficulty we find is in getting the men to properly prop up the coal when they are mining. They will not put in the necessary blocking and they often get caught. We have some treacherous roof, and I know cases where a mine foreman would pull a man out from a roof and tell him to set a prop there, but the man would go ahead and work with disastrous results.

I think the experiments being made and which have been made down at the testing station at Pittsburgh are resulting very beneficially. I took all my foremen and fire bosses down there. We had a big carload of them and they were very much interested in the explosions and in fact, I do not think any of them believed there was such a thing as a dust explosion until they saw it in the testing station at Pittsburgh.

I thank you.

SAFETY MEASURES IN THE ROCKY MOUNTAIN MINING DISTRICT

Mr. J. C. Roberts, Mining Engineer, Denver, Colorado

Mr. Chairman and Gentlemen: I do not want to trouble you with too much detail, but I am afraid, if you will excuse me, I have a few hobbies I may ride, and if I ride them too hard, call

me down, but there are a few things that are being done, or rather many things are being done, by our operators in the west we all may profit by.

I shall refer more particularly to the coal mines because we have done more in the coal mines than in the metal mines, although the metal mines in the west have done some things. As a matter of fact, the state of Nevada has passed a law—you gentlemen will recall we had a disaster in the Belmont-Tonopah mine which killed twenty-seven men, the result of a mine fire, and about a year later there was another fire in the Gereux Consolidated Mines which killed nine miners; as a result of those two disasters the state of Nevada has passed a law compelling all metal mines of the state to install rescue helmets and rescue apparatus. This is the first state, I believe, to pass such a law. The state of New Mexico has recently passed a similar law compelling the use of rescue helmets in all their coal mines.

In Washington there are laws regarding electricity in mines which have proved of immense benefit. All naked wires in the mines are compelled to be protected by at least six inches of board on either side of them. This, I am told, has resulted in the saving of a great many lives and prevented a great many accidents from electricity in mines.

In the western territory, as in the east, most of the states have state inspectors. In addition to that our larger mines have inspectors of their own. A large company will have one chief inspector, and at each of their mines they have an inspector whose duty it is to see after the safety of the men and of the property. It is his sole duty, he has nothing to do with anything else. This inspector has the power to bring out any man who is in a dangerous position, force him if necessary or discharge him, if he sees fit. That, I believe, has resulted in the saving of a great many accidents.

There is one point that was brought out by Mr. Conibear that I want to touch on, and that is the individual responsibility of the men. I believe that every man who enters the mine has an individual responsibility resting upon him, not only for his own safety but for the safety of every man in that mine, and I say it is up to us and up to the operators to impress upon the men that fact of individual responsibility. If we can get the men themselves to realize this responsibility resting upon them, we will save a great many lives

and a great many accidents. It is a difficult thing, we know, but it is a matter of education, and education is always a long drawn-out process.

And just along that line there is one company that I have in mind in Montana. I was told not long ago that they had not had a single fatal accident in their mine for two years and had not had a scratch to an employe in over a year. They attribute that fact to the classification of their labor. The miner, the coal miner, as we all know him to-day, does nothing but load coal. They have one set of men to do the timbering. Another to lay track; another to undercut the coal; another to punch holes in the coal; and still another to load and shoot the coal.

We know the class of labor that we have in our mines to-day is very much below what it was some years ago, and it is getting worse. Many of the men are ignorant of our language. They do not understand orders given to them. Many of them, do not want to understand them. They say: "No sabe", but they do "sabe." The point of it is they don't want to "sabe." Nevertheless, the majority of our accidents have been through carelessness. We find, in going over our statistics, that the men who are hurt in our mines are not the new men, the ignorant men, they are the careless, hardened men, who have become inured to danger. They say: "I have done that a thousand times, I will do it again." That old last car of coal, as I say that damnable last car of coal, has killed more men than any one thing. A man goes in and taps the roof and he knows it is bad. He doesn't want to take the time to go out and put a prop under it to protect himself, and the roof falls and kills him. The company is blamed for it. They are not to blame for it, it is the carelessness of that individual man.

Many of our mines are putting in electric shot firing systems which are used after all the men are out of the mine. We had one mine in Utah which, after it installed this electric shot firing system "went up". There wasn't a man in the mine. It blew the mine all to pieces but it did not kill a man. Ordinarily that mine would have "gone up" under the same conditions and every man in the mine would been in there, and probably two hundred men would have been killed. Having installed this electric shot system and firing after the men were out, the lives were saved, though there was a serious property damage.

A word on permissible explosives. We are making the strongest effort to introduce and have introduced in many of the mines in the west permissible explosives, as we have in the east. I am not making any comparison between the east and the west, but just telling you some of the things we are doing. Perhaps it might not be out of place for me to tell you what a "permissible" explosive is. A permissible explosive is one which has passed the tests at our Government station at Pittsburgh. The general government has no right to make laws or regulations in regard to mines except in the territories, but the states must make these laws. Consequently what are called in the old country "permitted" explosives are called "permissible" explosives in this country, one which has passed the Government tests. Those tests are four in number, made in a steel gallery 104 feet long and 6 feet in diameter which represents the mine drift. The cannon which is placed at the closed end of this represents the blown out shot in the mine.

Test No. 1 consists of firing an amount of the explosive to be tested equivalent in disruptive force to one-half pound of 40% nitroglycerine dynamite tamped with one pound of dry fire clay, into a mixture of gas and air containing 8-½% methane. Ten shots are fired into this mixture, and if any one of the ten ignites it, the explosive is thrown out.

Test No. 2 consists of firing the same amount of the same explosive in a mixture of 4% gas and cold dust. The coal dust is scattered on shells latterly in this gallery, and also on a wooden horse 20 inches wide and 10 inches long placed 5 inches below the mouth of the cannon. There is also a circulating system which circulates the dust so the air is surcharged with coal dust, making a condition as dangerous, or even more dangerous than you could imagine in any coal mine. Ten shots are fired into that mixture and if any one of the ten ignites it, the explosive is condemned.

The third test consists of firing the same amount of the same explosive in coal dust alone, and if any one of the ten shots fires that, the explosive is not passed.

The crucial test is to determine the limit charge, or how much of that explosive can be fired into a mixture of gas and dust without igniting it. In the test to determine the limit charge there is no tamping in front of the powder or explosive. If anything under 680 gramms, or 1-½ pounds ignites that mixture of gas and dust

that explosive is thrown out. When we state to you that 25 gramms of black powder, or 25 gramms of dynamite fired into one of those mixtures under one of those conditions will invariably ignite it, you can readily see the relative safety between permissible explosives and black powder in the mines.

The Government is doing all in its power to get the miners to put in permissible explosives in place of black powder, and it has met with remarkable success. The operators are taking it up and, as the result, the bulk of our mines in the southern part of the Rocky Mountain region are using permissible explosives. In the northern portions they are not. One reason for that is the labor unions have an agreement with the operator by which they charge so much for black powder. Black powder is mentioned in the agreement. Permissible explosives are not mentioned in the agreement. Efforts have been made, so far with only partial success, to get the operators and the miners to agree to the use of permissible explosives. They have an idea because a permissible explosive costs more a pound that it is going to cost the miner more per ton, but we have demonstrated without a doubt that the cost of the permissible explosive per ton of coal is no more than black powder, and in many cases very much less, and it will do double the work.

Next is the use of safety lamps. It is my personal belief, not official, that all coal mines should be operated with safety lamps or electric lamps; in other words, no naked lights should be used in any coal mine. A very large percentage of our disasters are the result of fires, and in every case, I think I can say in every case of a fire in a mine it has either been caused from the black powder setting fire to the gas or coal or to naked lights.

I will cite one instance in the state of Colorado alone, with just 15,000 miners, only a mere handful, in the two years that the Government has been working in that region we have had seven disasters. Five of the seven were directly attributable to the use of open lights causing fires, resulting in one case in an explosion and in the death of seventy-nine men. I believe if we can eliminate from our coal mines absolutely, open lights we will find great benefit, not only to our property, but in the salvation of a great many lives.

A word or two on the helmet and First Aid work that has been done in the western country. The operators have taken up the matter, especially the larger operators, with avidity. The men themselves have taken up the work and, as the result, we probably have in the Rocky Mountain district now in the neighborhood of three thousand men trained in the helmet and First Aid. I do not mean by that we have issued three thousand Government certificates, but what work has been started by the Government has been carried on by the operators. Wherever they have established stations they have trained their men and keep their men in training.

There is one more thing, and that is, the discipline in our mines. We need discipline. We need better discipline in our mines. I was in Chicago about two years ago with a friend and we were looking at the traffic squad. He remarked to me that in England the "cop" raises his hand and the people involuntarily stop. Why? Because he is the law and the people respect him. In Germany the "cop" raises his hand and the people involuntarily stop. Why? Because he is the law and as such they fear him. I said "Yes, old man, but in this country if a 'cop' raises his hand and we want to go across the street we go, we take chances." The trouble is that we have not that love, regard, or fear for the law we should have, and how can we expect the ignorant foreigner who comes over here and sees us as American citizens, disregard the law, how can we expect him to observe our laws and rules and regulations? He goes us one better and takes liberty for license and does as he pleases. I say as long as there is a law on the statute book, obey it. If it is a pernicious law, repeal it. But, as long as there is a law, obey it. I say to the miner the same thing: "You are working for an individual or a corporation. If you do not like the rules and laws laid down by the company which rules and regulations are laid down for your protection as well as the protection of that company, quit your job and go somewhere else, but as long as you work for that corporation or that individual obey its laws or his laws," and if we can instill that into the minds of the men, we will prevent a great many accidents caused from carelessness and disregard of law and order. (Applause.)

SAFETY DEVICES ON MINE HOISTS

As used by the Penn Iron Mining Company.

By F. H. Armstrong, M. E.

The hoists used by the Penn Iron Mining Company have two drums, one for the skip handling the ore, and one for the cage handling men and supplies. Because of economy of shaft space only one skip is used, which holds six tons of ore, and is hoisted by electric power and lowered by the brake. The type of hoist used eliminates the peak of acceleration, and by a special method

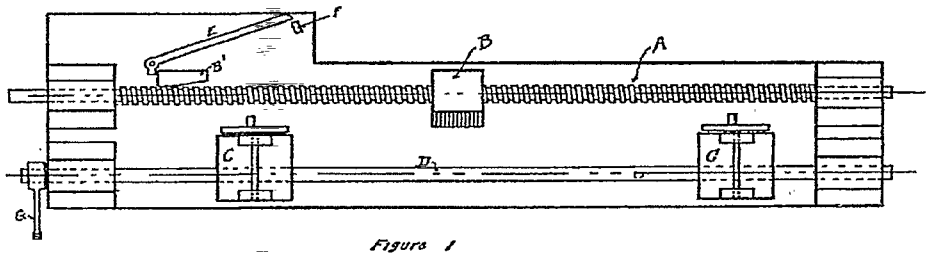

Figure 1

of counterbalancing gives high efficiency. As these features have nothing to do with the safety devices they will not be described here.

The Lane friction clutch, by which the drum is connected to the gear, is thrown in by an oil-operated clutch cylinder and pulled out by a weight. The band brake is released by a similar cylinder and set by a weight. In case the oil pressure should be lost for

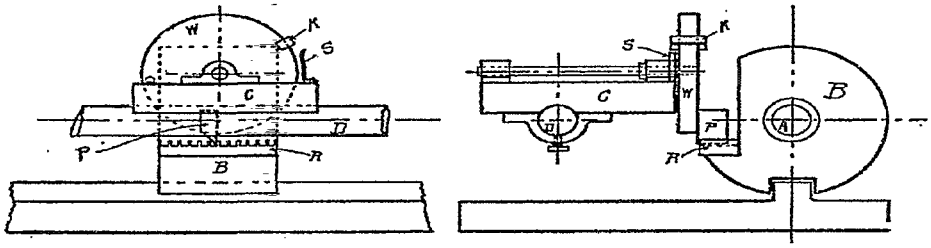

Figure 2

any reason, the clutch could be released and the brake set, stopping the drum.

Figure 4 shows the operating levers, C. operating a valve for the clutch cylinder and B. a valve for the brake cylinder. They are shown in the position for lowering—clutch out and brake off. If the catch "K" is lifted the weight "W" will put both levers in position shown at "C", thus setting the brake and releasing the

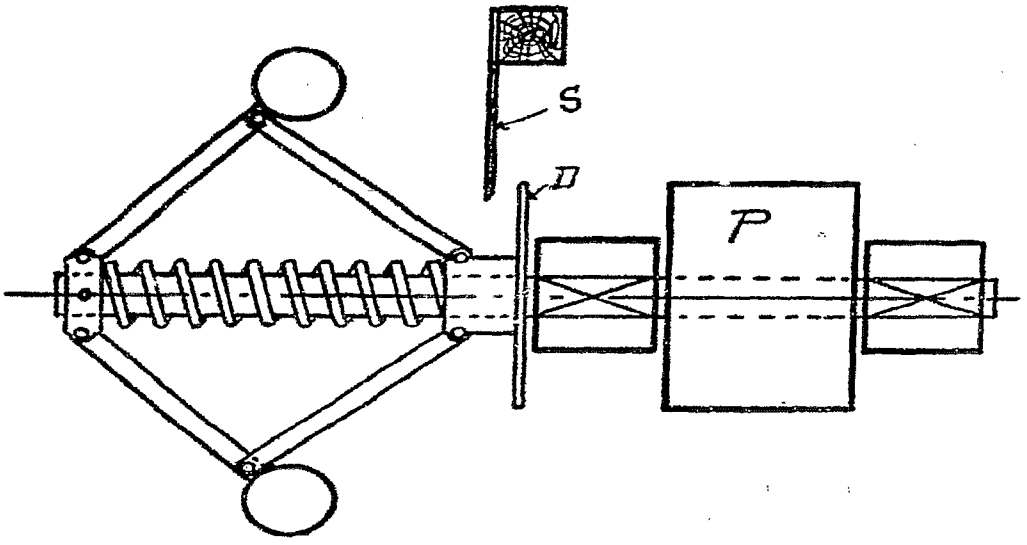

Figure 3.

clutch and stopping the drum, whether it is coming up or going down.

It was desired to have the safety device stop the drum under any one of four different conditions, viz: In case of overwinding or hoisting too high, in case of lowering too rapidly and at a point 50 feet below surface when coming up and 100 feet above bottom going down, the last mentioned to be under the control of the brakeman, so that if he is aware of the position of cage or skip he could disconnect either of these two devices.

Three of the four conditions are operated by the device shown in Figure 1. "A" is a screw driven from the drum, causing nut "B" to travel in a constant relation to the cage. When the nut is at "B" the cage is at the top. A slight movement makes contact between

"E" and "F", sending a current through solenoid "S" (Figure 4) releasing catch and stopping the drum, as described above.

"C" is a fibre block carrying a contact wheel "W" (Figure 2) on which is a pawl "P." As the traveling nut moves to the left the teeth of the rack on the nut catch the pawl, turn the wheel and make contact at "K-S", which as before causes the weight to drop, releasing the clutch and setting the brake.

The pawls on these wheels are beveled in opposite directions, one operating when coming up and the other when going down. Both blocks ("C") are fastened to a shaft ("D") which, by means

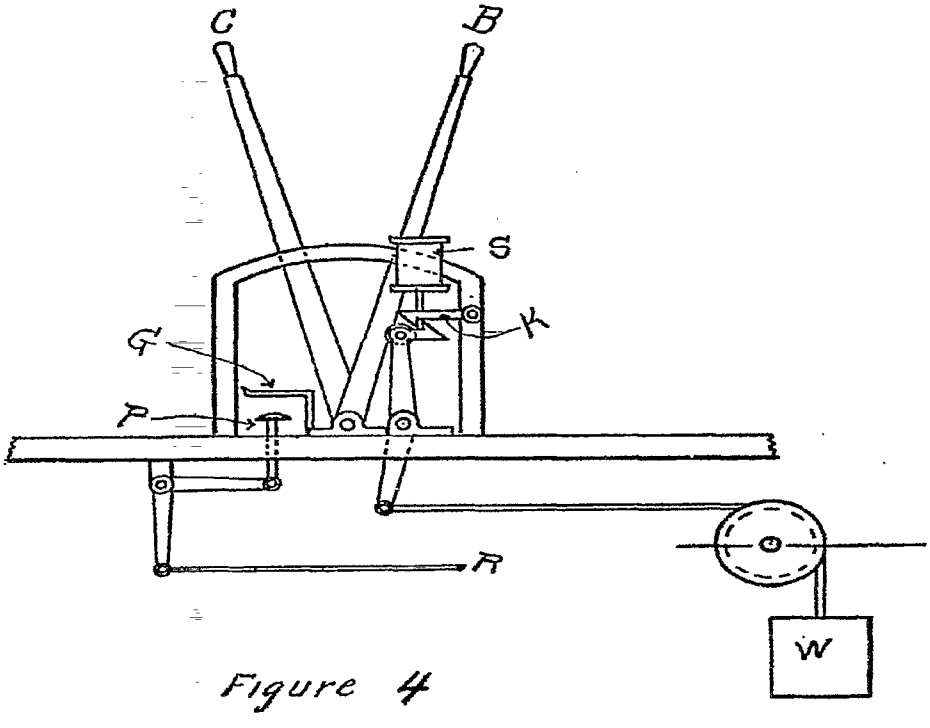

Figure 4

of lever "E" (Figure 1) and rope "R" (Figure 4) can be rotated slightly, lifting the pawl and allowing nut to travel under.

Figure 3 is the speed device, a simple fly-ball governor which

is driven from the drum by a belt on pulley "P." When the speed reaches 1,500 feet per minute, contact is made at "D-S."

"G" (Figure 4) is a bracket over the bottom ("P") so that in case the brakeman should faint or die he could not fall on the button "P."

These devices have been in use several months and have been tried a great many times. They have always worked, stopping the drum smoothly and without shock, even when lowering at 1,500 feet per minute.

SAFETY MEASURES IN MINES IN THE SOUTHERN APPALACHIAN DISTRICT

F. H. Crockard, Vice President Tennessee Coal, Iron and Railroad Company

During the last four years the Coal Mining Companies of the Southern Appalachian Field have taken a very great interest in the development and application of safety measures; particularly is this true of the State of Alabama, which ranks fifth in the coal producing states, and which is now producing about six per cent of the total output of bituminous coal in the United States. Since the writer is not in possession of first-hand data regarding the general practice of the Southern Appalachian District, his remarks will be limited to the Alabama Field.

The new State Mining Law, which was prepared by the Mine Casualty and Safety Committee of the Alabama Coal Operators' Association, may be taken as representing the general trend of thought regarding safety measures.

These features are embraced under the general headings of "Inspection", "Discipline", "Permissible Explosives", "Shot Firing", "Shielding of Machinery", "Fire Proof Construction", and since safety means freedom from danger, may we not also include "Sanitary" and "Hygienic" measures?

It is appreciated that in discussing safety measures, we think of the mine rather than mine and camp. Unfortunately, we may have a very satisfactory record at the mine and a very unsatisfactory one in the camp. In the latter case, the danger is perhaps less evident, but none the less real.

Inspection

The new law provides an inspector for every two and one-half million tons of yearly output. This has had the effect of doubling the number of inspectors, enabling them to visit each place twice as frequently as heretofore, and to do their work much more thoroughly, as the law requires that every working place shall be inspected, as far as possible, every three months. The Chief Mine Inspector, with the concurrence of two associates, has power to stop the operation of any coal mine whenever, in their judgment, there is sufficient gas and dust to cause an explosion. Fire bosses are required, not only to mark places in which they have found gas, but to also stand at some convenient point for the purpose of advising the miners of any dangerous conditions found in their rooms. Dust dangers are fully appreciated, and must be controlled by spraying or sprinkling, and it is now the general practice to keep the mines damp by steam jets spraying or sprinkling, the later referring more especially to the practice at the face of the room. Signs, or guide boards, are placed in the mines to indicate exits wherever there is a possibility of a person going astray.

It is unlawful to build a fire in a mine without permission of the superintendent, obviating a great deal of danger due to miners building fires to warm their tea or coffee, or the indiscriminate building of fires for heating babbit metal for repair work. Gates to prevent men from falling into the shaft are required on all shaft landings, except at the bottom.

When any place in the mine is approached, within one hundred feet of any abandoned mine, or part of a mine likely to contain water or gas, a hole is drilled near the center of the face at least nine feet deep and in each corner fifteen feet deep, at an angle of forty-five degrees to the line of entry at intervals of six feet. Places shall not exceed eight feet in width and holes for blasting shall not exceed four feet in depth. At all doors where attendants are employed, sufficient space or safety holes are required. It is needless to say that shelter holes are also provided along main haulage ways.

The question of timbering has also received attention, and so far as the writer is informed, the Tennessee Coal, Iron and Railroad Company is the only company in the field that has established

a rigid system of timbering. It is required that the timber be set at intervals of four feet each way, whether the roof is good or bad. This practice may be in opposition to the conservation policy of the Bureau of Forestry, but it has operated to conserve some human resources, which is clearly shown by the records of the last four years.

If one hundred be taken as representing the number of men killed per million tons mined in 1908, we have for the year 1909, 76.7; for 1910, 50.3; for 1911, 45.8. This is a reduction of fifty-four per cent in the death rate. Since about one-half of the total accidents in mines are caused by falling roof or coal, it is believed that fully fifty per cent of this reduction, or twenty-five per cent of the total death rate is due to the improved timber practice. It is confidently hoped that the next four years will see a further very substantial decrease in the death rate. With this system, the timber is required at all times to be within five feet of the face in pick mine places, seven feet in those cut with Sullivan machines and twelve feet in those cut by the Jeffrey machine, but away from the face, it is four feet each way in all cases, whenever the roof is bad, the timber is set closer to the face. Machine men are required to reset the timber, provided they take it down to operate the machine.

With some of the larger companies, it is the practice to have Company Mine Inspectors. The duties of these special inspectors are very much like those of the State Mine Inspector, except that they go over the mine more frequently and make a much more detailed inspection, and not only look after the observance of the State Laws, but the Company regulations as well, and assist very much in the maintenance of discipline. The inspector, when visiting the working places, if required, instructs the workmen in setting timber, in taking down dangerous roof, caring for their explosives, detonators, and fuse. He acts somewhat as peace-maker and general critic. His chief good perhaps lies in helping to maintain discipline at all the mines of the Company. It is probably fair to state that of the two companies working under the same rules, one with lax, and the other with rigid discipline, that there may be easily a difference of twenty-five per cent in the death rate, and if an inspector can control this twenty-five per cent, his services are indispensable.

Permissible Explosives

Permissible explosives have supplanted in a large measure the black powder and dynamite used in shooting coal and rock in the mines, but in some cases, permissibles have not proven satisfactory. There are places in which they have not been given a fair trial, due largely to lack of training and experience on the part of miners and mine officials, but in some mines they have been carefully tried and found wanting. In fact a number of permissibles have been given exhaustive tests and have not met the conditions sufficiently well to make mining with them commercially profitable. In a number of these cases black powder is used, but surrounded by all the conditions that lend to its safety, among which are undercutting, sprinkling, a limited charge of powder, clay tamping, good ventilation, and rigid inspection of these conditions.

The State of Alabama in 1911 used six and one-half million pounds of explosives in the coal mines, of which fifty-four per cent was classified as "permissible." With this amount, there was produced in 1911 fifteen million, eleven thousand, eight hundred and fifty-three tons of coal, of which sixty-nine per cent was mined by "permissible" explosives, which shows an increase of eleven per cent over the preceding year. Powder jacks are used at some of the mines, and these are made to hold seven and one-half pounds of powder and filled by a powder man in a house specially arranged for that purpose. The miner has two jacks, but is only permitted to have one in the mine. This box is not allowed to be carried closer than within one hundred feet of any mining place. If a hole is drilled, all the fine coal must be removed with the scraper before the charge is placed in it. The hole must be filled to the outer end with tamping. Only clay tamping is permitted. It is unlawful to use two kinds of explosives in the same hole, or to have an explosive in the mine which is not permitted by the rules of the mine.

Shot Firing

Electrical shot firing consisting of a system of wires to all working places, by which the shots are fired simultaneously from a station outside the mines, has been used to some extent. As a safety measure, it is quite efficient, but from a commercial standpoint, it has its disadvantages, chief of which is the number of misfired shots and the cost of maintenance. In the case of a misfired shot,

the miner is not allowed to work his place the succeeding day. This causes a number of working places to remain idle. The consequent reduction in tonnage from this cause is a serious objection, and for this reason, it is not growing in favor in the Southern Appalachian Field.

Whenever the Company rules specify a certain time for firing shots, it is unlawful to fire at any other time. No shot shall be fired with a fuse less than three feet in length and no squib shall be shortened or oiled, and must be lighted only at the end.

Explosives cannot be stored in a mine, except that enough may be taken in for the requirements of the next day. The miners are permitted to have one day's supply.

Shielding Machinery

A great deal of attention has been given to the subject of shielding moving parts of machinery, guard rails around pumps, engines, and sumps. Guards are required by the Company regulations on all gear wheels, belts, and on the chains of mining machines. Steel ladders are frequently used in place of the dangerous and unreliable wooden ladder. Toe boards are much in evidence on all over-head platforms.

Fire Proof Construction

The question of fire proof construction has also received considerable attention. At one mine recently developed in Alabama, the shaft is entirely lined with concrete steel buntons, and steel guides are used. There is absolutely no combustible material in the shaft. The man-way of this mine is also lined with concrete and the concrete steps are provided with a steel pipe hand railing.

The State Law requires powder houses to be built of non-inflammable material.

A great deal of attention is also being given to the mine stable with the view of eliminating fire risks. Metal doors set in incombustible casings are now required in each opening of the stable. These, of course, are for the purpose of confining a fire in case one should break out inside the stable.

Open lights of all kinds are prohibited in the stable, and all hay or straw sent into the stable must be baled out and not more than two day's supply kept in the mine at a time. Incandescent electric lights or lanterns of the railroad type are permitted in stables.

The air ventilating the stable must be on a split in order to

prevent its being carried to any working places after passing through the stable.

The inside parts of the stable must be of masonry or hardwood, the wooden members must have a section not less than three inches by six inches and no stable shall be placed closer than one hundred and fifty feet to any openings used as places of egress or ingress.

Electrical Requirement

The law has defined three classes of electrical equipment grouped with reference to the voltage as follows:

Class 1—0 to 300 D. C., and 0 to 240 A. C.
Class 2—300 to 600 D. C., and 240 to 480 A. C.
Class 3—600 or more D. C., and 480 or more A. C.

No electrical equipment can be installed in or about working places in which the voltage is higher than Class "1". All trolley wire carrying Class "2" voltage must be shielded, except in those instances where they are at least six and one-half feet above top of rail. Trolley wires are prohibited whenever safety lamps are used as a working lamp. Power lines at the entrance of mine must be protected by lightning arresters.

Safety Committee

In the case of one company controlling a large number of mines, Safety Committees are appointed to keep a special look-out for dangerous conditions. This committee reports every sixty (60) days, with suggestions for improving any condition regarded as unsafe. These committees consist, usually of one miner, one haulage man, and one ventilation man. They continue on duty for two months, after which the committee is discharged and a new one appointed. They receive their regular wages while making these inspections.

Suggestion Boxes

Suggestion boxes are placed at the works wherein anyone may drop a suggestion which has been reduced to written form. These are collected and passed upon by a committee which awards monetary prizes for the most practical suggestions.

Checkouts

A checking system is now in very general use throughout the State. While it is not new, it is more generally observed than formerly. In case a man is detained at his working place by acci-

dent, it serves to locate him more readily, and where the electrical shot-firing system is used, it is essential in determining that the men are all out of the mine when the firing takes place.

Instruction

With the view to educating the miner, several of the companies have a regular instructor or lecturer, who visits the various camps and there, by means of a stereopticon, delivers a non-technical talk on the several phases of mining work; this with the view of warning the miner against the dangers which confront him and also with the view of instructing him in the more elementary principles of mining. This course has been of considerable assistance in those cases where the applicant was anxious to secure a State Mining Certificate.

These lectures, supplemented by a book of Company rules and regulations, have gone a long way in effecting a very marked improvement in mine discipline.

First Aid Corps

A number of the coal companies have established First Aid Corps. These men hold frequent drills under the direction of the Company physician, and have been found a very useful organization. Rescue apparatus in the shape of helmets and pulmotors have been provided in a number of instances.

Sanitation

The Alabama Coal Operators' Association, appreciating the fact that safety measures should not be confined to the mine, engaged the services of an engineer for the purpose of making a sanitary survey of the camps.

The question of water supply received early consideration, and, as a result, a number of the companies have installed mechanical filters for the treatment of all drinking water, or have properly protected the various wells and springs; and in some cases, have filled up a number of wells which were shown to be polluted.

Recognizing the grave dangers accompanying the open closet, a very thorough study was made of this subject, and to-day there are a number of sanitary privys, in which a water tight vessel is enclosed in a fly-tight closet, and the contents collected weekly, or oftener, and disposed of in septic tanks. The spread of typhoid fever and hookworm can, no doubt, be very much more readily controlled under these conditions than with the usual open closet.

In some of the camps, contagious diseases are quarantined under the direction of the Company doctor, just as they would be in a city under the direction of the City Health Officer.

A very marked improvement has been effected in some of the camps and mining towns this year as a result of a campaign against malaria, in which an effort has been made to drain or fill all stagnant pools. Where drainage or filling has been found impracticable, such pools are treated with oil. Efforts have also been made to minimize the number of old tin cans and bottles which serve as breeding places for the mosquito, and also to prevent the spread of malaria by the isolation of the patient by screening. In one mining town with which the writer is familiar, the percentage of cases for the year 1912 compared with 1911 promises to show a reduction of over fifty per cent.

Company Stores

Another important safety condition, which has received not a little attention, is that of the Company Store, in which, in many instances, bread, vegetables, candies, cheese and meats, are either carried in glass cases, or properly protected from the fly by thorough screening.

Examination of School Children

The Medical Departments of several of the large corporations are now examining all school children, with the view of detecting any defects of sight, diseases of the eye, or deafness, and an examination of the throat and mouth in reference to adenoids and dental conditions. In several instances, contagious skin diseases have been detected and the patient barred from the school pending recovery.

SAFETY MEASURES IN THE BITUMINOUS COAL MINES OF WESTERN PENNSYLVANIA

By Herbert M. Wilson, Engineer in Charge, Experimental Station Pittsburgh, Pa.

The present interest in greater industrial safety is nowhere more pronounced than in the coal mining industry. This condition is but the natural result of a number of contributing causes,

which, beginning a quarter of a century ago with the application through the Inter-State Commerce Commission of safety measures in railroading, is culminating in the consideration of those industrial workers who have until now been looked upon as the most difficult to protect.

The greatest thought expressed in early Christian times was of man's individual responsibility to Almighty God. Modern civilization has splendidly developed the thought of man's individual responsibility to his neighbor. In the 20th Century we have, with the slogan of "Conservation" expressed the thought of man's responsibility to posterity, to the race. And in no branch of conservation has the thought been worked out on a higher plane than that expressed in the effort for conservation of human resources and evidenced in the movement for "safety first."

Every great social movement must pass through at least two important periods. The longer and more discouraging is that given over to education, or agitation, during which the energy of those interested is expended in awakening a torpid public sentiment and in building up a sympathetic one. The second period, and that now entered upon by the movement for which this Congress stands, is the crystallization of the sentiment built up by the propagandists, and the creation of an effective organization to give it force; in other words, we have passed the period of passive philosophic study and are now entering upon an aggressive constructive period.

Safety in mining was recognized with the beginning of the industry in state legislation providing for mine inspection, and much has been done to safeguard the industry through the work of the various state mine departments and bureaus. A period had, however, been reached perhaps a decade ago, when the too oft recurring mine explosion with its long list of dead and injured and the daily accidents from minor causes were accepted as inevitable to the industry. It was in this period that the impetus furnished by the first conservation congress, and a coincident series of mine explosions, awakened the United States Congress to the necessity of investigating these disasters, and resulted in the establishment of a National Bureau of Mines. The propaganda which led up to the creation of this bureau aroused the mining community to the lack of safety, and gave a quickening impulse toward better conditions.

The highwater mark of death and injury in coal mining was reached in 1907, since which date the increasing ratio has been perceptibly retarded, and there has been evidenced a slight but steady diminution in the ratio of deaths and injuries per million tons of coal mined as follows:

Year	*Killed per million tons of coal mined*
1904	5.91
1905	5.77
1906	5.19
1907	6.93
1908	6.05
1909	5.79
1910	5.66
1911	5.48

Another potent influence for the betterment of safety conditions in mining has been the propaganda for employers' liability, and more recently for workmen's compensation. With the realization that the industry should pay its costs and that legislation compelling action in this direction was rapidly approaching, mine owners have wisely sought means of reducing their prospective liabilities by reducing the risks.

The old idea of a coal baron is a myth. The coal mine operator of to-day is one of the most progressive employers and one of the most vital forces for bettering safety and labor conditions. Unfortunately, the economic condition of the coal industry is not such as will permit it to pay the recognized expenses of operation, and further legislation or regulation is essential to the improvement of industrial conditions, and the coal operators realize this better even than do their employes, or the propagandists. The better safety appliances and better conditions of compensation for workmen in European mines are too often but unfairly pointed out as a reproach to the coal mining industry in America. There, through the participation of the Government in coal mine ownership and operation and its representation in the directorate of mining syndicates, it has been possible to so regulate prices in Europe, and particularly in Germany, that their coal brings at the mine from $1.75 to $2.25 per ton; whereas in the United States the prevailing price rarely exceeds $1.25 and is often below $1.00. Until destruc-

tive competition can be restrained, antagonistic criticism abated and a fair price be demanded at the mine it will be difficult for the coal operator to introduce those safety measures which he now knows to be essential to his welfare, as well as that of his employe. Something further can and must be done by the operator to improve existing conditions as a means to his own financial protection, and this is now being undertaken as rapidly as the operators realize that it is more expensive to fight damage suits through the courts, and more expensive to pay regulated liability charges, or even workmen's compensation than to bear the cost of reducing these charges through diminishing the number of accidents and the duration of the resulting disability by the adoption of safety and First Aid methods.

The most progressive body of mining men in this country, the American Mining Congress, at its last annual meeting appointed a committee to consider the recommendation to state legislatures of laws imposing a tax of one cent a ton on all coal mined, the proceeds to be applied to relieving the injured, or their heirs. On the present output of one-half billion tons of coal per annum, such a tax would net five million dollars annually toward relief.

The best data available concerning the causes of industrial accidents of all kinds is that provided in Germany from which it appears that nearly 58 per cent are due to negligence of employers or employes, and about 42 per cent to the inevitable risks of employment. In the United States, there occur annually 100,000 violent deaths, one-fourth of which are due to murders, suicides, and other personal conflicts. Of the remaining 75,000 accidental deaths, 35,000, or nearly one-half, are those of workmen killed in their occupations; in addition to which one million are annually injured.

Before considering the safety measures now being provided in mining, let us review for a moment the very important and recent history of the movement for workmen's compensation. In many states there has been little change from the English law which requires prolonged and extensive ligitation of so-called damage suits with but little real gain to the injured men or their families, due to the costs involved. In the last decade many employer's liability laws, both State and Federal, have been enacted, but more recently these have been found unsatisfactory and chaotic. Attention is now being focussed on the more desirable alternative of considering

personal injuries as inherent in the conduct of industrial business, the worker being treated as part of the machinery of production, to be cared for as are other repairs or replacements, regardless of feeling on his or his employer's part. In other words, the system of workmen's compensation is coming rapidly into favor and is in force in nearly every industrial nation in the civilized world, excepting only the United States. This plan eliminates the waste of ligitation over those accidents for which the employer cannot be legally held under liability legislation. The first effective compensation act is that of the Federal Government of May 30, 1908, providing for the continuation of wages for one year of men injured in the hazardous branches of the Government service, including the Bureau of Mines.

The coal mining industry found its first substantial recognition in Montana in the act of March 4, 1909, providing a state co-operative insurance fund covering men employed in coal mining. In April, 1910, the state of Maryland inaugurated a co-operative insurance fund for coal miners, which superseded an act passed in 1902 but declared unconstitutional, which was the first attempt to provide a state insurance covering mines. The year 1911 was one of exceptional activity in the provision for workmen's compensation, and in that year ten states, California, Illinois, Kansas, Massachusetts, Nevada, New Hampshire, New Jersey, Ohio, Washington and Wisconsin, passed acts providing workmen's compensation. Half of these affect railroads, five all industries; some provide compensation by the employer, a less number paid insurance; in one case co-operative, one compulsory for employer and optional for employe, some elective and one compulsory for hazardous employments, elective for others. There are now under consideration by various national organizations and government commissions, including the National Civic Federation, American Federation of Labor and a Congressional Commission, six separate types of workmen's compensation acts.

A recent test of such acts was of the Massachusetts law which became effective July 1, last. In less than two weeks thereafter, a case was settled by the decision that the family of the deceased should be paid $7.33 per week for the next six years, or a weekly sum equivalent to one-half of the average earnings of the heads of families, a sum far less than would have been paid by the employer for ligitation or for damages.

This hasty review of the rapidity with which legislation is being enacted compelling the employer to care for injured workmen clearly shows the importance to him of reducing his liabilities by all available means. These are of two kinds, namely safety or preventive measures, and protective or rescue and First Aid methods.

Recent measures for safety in mining, aside from state inspection regulations which have been long in force, include the provision for men trained in the use of artificial breathing apparatus for the recovery of mines and of persons injured within mines and the adoption of a system of training in First Aid to the injured. The latter system first of slow growth among a few European and subsequently eastern American mining districts, has in the last few years made rapid progress as the result of the adoption of a series of safety stations and cars by the Federal Bureau of Mines. In the last year alone this bureau has trained in First Aid to the injured men of whom many have themselves become instructors of others, to the number of nearly 7,700.

The effect of First Aid training is reliably asserted by conservative mine operators to have reduced the idle period, and in consequence the compensation period, of injured employes by 20 to 90 per cent, or an average of 50 per cent. Injuries which without proper treatment would have developed into serious cases, incapacitating the patient for a week or for even months, have, thanks to sanitary First Aid treatment restored the workman to a wage earning condition within a few days.

The idea of training men employed in hazardous professions in First Aid to the injured dates from 1880, when the St. John's Ambulance Association was organized in England. Later, the St. Andrew's Ambulance Association was organized in Scotland, and the Sameritter Verein in Germany, as well as similar organizations in France, Belgium and Austria.

First Aid to the injured was not seriously considered in the United States until 1897 when several railroad companies furnished First Aid packets and books of instruction to some of their men. In 1899 the work was started in the anthracite coal fields where it is now an essential feature of mining.

The example set by the anthracite coal fields has been successfully followed in practically all mining states, until at present every

progressive mining company feels that its organization is not complete until the work of First Aid to the injured is thoroughly established among its men.

Very closely connected with the work of First Aid to the injured is that of rescuing men from within the poisonous gases following a mine explosion or fire. This rescue work is done with the aid of self-contained breathing apparatus, several types of which are in use. Those most generally used to-day consist of a steel tank containing compressed oxygen which is fed through a reducing valve into a breathing bag and thence to a mouth-piece or a helmet and into the lungs; the exhaled air is regenerated by means of caustic soda or potash, and is again mixed with the pure oxygen. All of this apparatus is carried on the back and weighs in the neighborhood of 40 pounds. The modern apparatus enables the wearer to perform hard labor within poisonous gases or smoke for a period of two hours.

The use of such apparatus for rescue work in mines is no longer an experiment, but has become an important factor in lessening loss of life or property from fires and explosions. After severally testing various types of breathing apparatus, the governments of several European countries, namely, Austria, Belgium, France, Great Britain, Holland and Russia, have required by law the maintenance of mine rescue stations. In Germany the erection of similar stations has been started voluntarily by both private collieries and associations of colliery owners. In British Columbia the government requires breathing apparatus to be kept at coal mines. The introduction of breathing apparatus at coal mines in these countries has already been well rewarded by lives and property saved.

In the United States little progress had been made in the adoption of breathing apparatus at mines until late in 1908. At that time there were only a few sets of modern apparatus in this country. Since then the use and demonstration of the apparatus by the Bureau of Mines has awakened wide-spread interest, and in consequence many of the largest coal mining companies in this country have voluntarily purchased breathing apparatus and established training stations.

The Federal Bureau of Mines now has in operation six mine safety stations located at Pittsburgh, Pa., Urbana, Ill., Knoxville, Tenn., McAlester, Okla., Seattle, Wash., and Birmingham, Ala.,

and seven mine safety cars with headquarters respectively at Wilkes-Barre, Pa., Trinidad, Colo., Evansville, Ind., Rock Springs, Wyo., Billings, Mont., Huntington, W. Va., and Pittsburg, Kan., and an eighth shortly to be put in service in Michigan and Minnesota. E ch of these cars and stations is fully supplied with mine rescue and first-aid equipment and fire fighting apparatus, all in charge of a mining engineer aided by practical miners specially trained in rescue methods and First Aid.

The cars and stations of the bureau have thus far trained in the use of breathing apparatus approximately 7, 734 miners and in First Aid to the injured a nearly equal number, to whom certificates of competency are issued. The visitors to the various cars and stations have numbered 74,152 of whom it is estimated that 50,000 were coal miners; in addition 71,444 persons have attended safety lectures given by employes of the bureau.

As an illustration of the attention given by the mining companies in the bituminous coal fields of Western Pennsylvania to the matter of greater safety in mining, I will refer to the operations of the H. C. Frick Coke Co. In a recent visit to mines of that company, I was greatly impressed with the tremendous effort being made to secure greater safety in all operating, living and working conditions about mines and villages. The first evidence of approach to a Frick property is a substantial metal post bearing a large sign "Safety first" in five languages. Everywhere are safety rules, notices, and warnings. The general rules and regulations of the company as well as extracts from the state mining laws are printed in five different languages and kept posted in a conspicuous place at each plant, as well as being distributed among the men.

There is a "Permanent Safety Committee" at each plant, composed of the superintendent, mine foreman, assistant mine foreman, fire bosses, and rib bosses, and also a "Safety Committee" at each plant composed entirely of workmen. This safety committee of workmen is appointed by the superintendent and they examine the mine at least once every three months and make written recommendations for bettering its conditions. This committee consists of from three to five members, according to the size of the mine, and the term of office is usually a year. The shortness of the period of committee duty is with a view to having as large a number of men as possible serve on it.

There is also a rescue corps of trained men at each of the large plants, a total of 266 men having been trained. Three fully equipped training and rescue stations are maintained. After completing the training course the men are given certificates, and each wears a red, white and blue button engraved with the words "First Aid and Rescue Corps." These men are required to renew their training and receive additional instruction at least three times a year. All of this, including the time of the men, is at the expense of the company.

The Frick Companies have trained a large number of men in First Aid work and maintain a First Aid corps at each colliery, the number in each corps varying with the size of the plant. From time to time contests are held between First Aid teams of the different collieries with a view to stimulating the interest of the men in the work.

Other mining companies operating in Central and Western Pennsylvania are equally vigorous in the adoption of safety and First Aid measures. Among the more prominent of these are the Berwind-White interest, the Keystone Coal and Coke Co., the Pittsburgh Coal Co., The Pittsburgh-Buffalo Co., The Ellsworth Collieries and many others.

SAFETY MEASURES IN COAL MINES IN ILLINOIS

By H. H. Stoek, Professor of Mining Engineering, University of Illinois and Secretary of Illinois Mine Rescue Commission

For many years the State of Illinois had a comprehensive mine law that compared very favorably with the laws of other coal mining states, but in 1909 Governor Deneen, acting under authorization of the State Legislature, appointed a Mining Investigation Commission with power "to investigate the conditions of mining coal in the State of Illinois with special reference to the safety of human lives and property and the conservation of the coal deposits." This commission which consisted of three coal mine operators, three coal miners, and three representatives of the general public, had just met for organization when the Cherry disaster occurred, and its first work was an investigation of that

disaster, in which between 200 and 300 men lost their lives as a result of a seemingly trifling accident in a mine that was considered to be perfectly safe and thoroughly modern in its equipment. As a result of this investigation several bills were presented to a special session of the State Legislature, and enacted into laws, known as the Fire Fighting Equipment in Coal Mines Law, the Mine Fire Fighting and Rescue Stations in Coal Fields Law, and the Miners' Institute Law.

The Fire Fighting Equipment law provides for an adequate water supply from the surface, a method of conducting it into the mine, around the mine bottom, and into the underground mine stables, a water sprinkling system in mine stables and in connection with certain timbering conditions, and for the installation of chemical fire extinguishers, hose, and water barrels. Fire proof doors set in concrete, stone, or brick are required for all underground stables and for stables containing more than ten stalls brick partitions are required between the sections containing ten stalls. The law also provides that all hay, bedding and feed kept in the mine be in closed cement, brick, or stone receptacles, and not more than a 48 hour's supply of hay or bedding be kept under ground, and not more than one week's supply of grain. All hay, bedding and feed must be taken into the mine in a closed car or box and kept in the same until placed in a fire proof underground receptacle. Unprotected lights are prohibited in mine stables. A thorough system of telephones is required in each mine, and electrical gong signals were required throughout the mine, but these gong signals were found to be impracticable, and the law was subsequently amended to do away with the gongs. A horn or other device must be provided on every cage, and a systematic fire drill is required. All shafts and mine stables constructed after the passage of the law were required to be of fire proof construction in every particular, excepting the cage guides in shafts, and all passage ways leading from the bottom of the shafts must be fire proof for a distance of 300 feet from the bottom of the shaft.

The Fire Fighting and Rescue Station law provides for the establishment of three mine rescue stations, one in the northern, one in the central, and one in the southern part of the State. These are under the general direction of a Mine Rescue Station

Commission appointed by the Governor of the State and consist of two mine operators, two miners, one state mine inspector, one representative of the Department of Mining Engineering of the University of Illinois, and one representative of the Federal Bureau of Mines. The work of the three stations is under the direction of a manager, and at each station there is a superintendent and an assistant. At each station there is also a mine rescue car, which is a remodeled Pullman completely equipped with rescue apparatus, and always kept ready to start for an accident upon a short notice. These cars are also sent from mine to mine and instruction given at the mine in rescue and first aid methods. As a result of the work of these stations and cars during the past eighteen months over 1000 men have taken systematic training, and about 600 have been granted certificates of proficiency in mine rescue and first aid work. The beneficial effect of having this body of men scattered throughout the state is great not only in case of accident, but the special training must make them more careful in their daily work, and it is the consensus of opinion of mining men that a large percentage of the accidents in mines are due to the carelessness of the employe and clearly preventable.

The Mining Investigation Commission already referred to submitted to the 47th General Assembly of Illinois a complete revision of the state mine laws, and the bill as presented by the Commission was passed by the Legislature in substantially the form in which it was presented. As practically all of the measures of this law were intended to give greater safety and better hygiene in the mines, a brief summary of the law is here pertinent. The law established a standard for the oil and for the black powder to be used in the mines and a more stringent regulation of gaseous mines. A most important feature of the new law was the giving of greater power to the state mine inspectors and making their powers and duties more definite and specific than they were before. They were given power to enforce the law to the extent of stopping the operation of a mine if necessary, and were given authority to remove individual law breakers from the mine. Each mine in the state must be examined at least once in six months. Extra precaution is required in shaft sinking and additional refuge places about the shaft bottom are required. The entire trend of the revision was along safety lines by providing practicable safety

requirements and giving adequate authority for enforcing these requirements.

It must be remembered, however, that the only absolutely safe mine is the one that is not working and that there is a certain point beyond which it is not possible to go in the matter of expense without closing the mines.

The Mining Investigation Commission presented a bill providing for the establishment of miners' and mechanics' institutes throughout the state under the supervision of the University of Illinois. Although this law was passed by the legislature no funds were provided for its enforcement and the establishment of such institutes has been delayed. It is confidently expected, however, that sufficient funds will soon be available to permit of the establishment of such institutes and that then a very potent factor will be in operation for spreading a knowledge of the cause of accidents and thus preventing them.

The above statements show that Illinois has taken a most advanced position in regard to safety mining legislation, and it is a matter of gratification and pride to the residents of the state to know that the percentage of accidents in Illinois is much less than the average for the coal mining states of the United States, and not much above that of the European countries which are so often quoted as examples of careful mine management.

TRANSPORTATION SESSION

Presiding Officer: R. C. RICHARDS, Chairman Central Safety Committee, Chicago and North Western Railroad.

"Opening Remarks," R. C. RICHARDS, Chairman.

"Accidents Attributable to the Carelessness of Employes and How Best to Prevent Them."

A. HUNTER BOYD, JR., Chairman General Safety Committee of the Baltimore and Ohio Railroad.

"Discussion,"

G. E. MCCAUGHAN, Claims Attorney, "Rock Island."

GEORGE F. BAKER,

J. P. GARDNER.

"Prevention of Accidents in Railroad Shops and Round Houses,

GEO. BRADSHAW, General Safety Agent of The New York Central Lines.

"Discussion."

E. J. BREWSTER, Supt. Motive Power and Machinery, "North Western."

GEO. WINTER, Member Minnesota Division, Shop Safety Committee. "North Western."

"Prevention of Accidents to Trainmen,"

S. M. BRADEN, Genneral Superintendent, "North Western."

"Discussion."

E. F. POTTER, Assistant to General Manager, "Soo Line."

J. WALTER COON, General Safety Committee, Baltimore and Ohio Railroad.

TRANSPORTATION SESSION

Presiding Officer R. C. Richards, Chairman Central Safety Committee, Chicago & North Western Railroad.

Mr. R. C. RICHARDS: In opening the Transportation Session of the first Co-operative Safety Congress that has ever been held in the United States, I want to take the opportunity of expressing to the Association of Iron & Steel Electrical Engineers my appreciation of the very great compliment that was paid to me in asking that I preside over this session, and before we adjourn this afternoon, it seems to me that we railroad people ought to put on record a resolution of thanks to this Association for making this conference a possibility, and the great success that it has been, and I trust that at some later time in the proceedings the Chair will have an opportunity of entertaining a motion of that kind. Before proceeding with the papers which we are privileged to hear this afternoon it may not be out of order for the chairman to make a few remarks as to the cause of this safety movement.

The Federal Government furnishes us with statistics that show every year in the United States 35,000 workmen are killed. That is one for every sixteen minutes of every day in the 365 days in the year. And that two million workingmen are injured in the carrying on of the peaceful industries of this country. That is one for every sixteen seconds of every minute and every hour of every day in the 365 days in the year. And it will bring it home to us that terrible loss by remembering that during the four days that this Co-operative Safety Congress will be in session there will have been 384 workmen killed, and 23,040 workmen injured; we can then perhaps commence to realize how necessary and how absolutely essential it is not only to the workmen of the country but to the industries in which they are engaged as well as for the public interest that something should be done for safety, and if you men, and the ladies—and God bless them for being here—could have seen that procession, almost continuous, that has passed through my office in the last thirty-one years, of cripples, of widows and orphans,

sometimes the mother with two or three children hanging to her skirts, of old fathers and old mothers who were left dependent upon a cold world because their only son had been taken away from them, then you would realize, as only we men who have been engaged in the matter of investigating and adjusting accident claims realize what a movement of this kind means and how necessary it is. We want to take that home with us and think about it, and we want to remember too that the work that we are engaged in is the noblest, it is the grandest work now going on in this country. This work of trying to save human life and human limb. They tell us, you know, that the priests are engaged in the greatest work in the world, the matter of saving souls, but if we cannot save the lives there is not going to be any souls left to save.

Unfortunately for the railroad industry nearly the whole curse of this terrible accident record that the Government publishes is put on us. It is as we railroad men know, unfair. This happens because we are the only class of industry in the country that makes reports of these deplorable accidents to one central authority, the Interstate Commerce Commission. Now, of that 35,000 workmen that are killed every year, and of that two million workmen that are injured every year, only one-tenth of the killed are railroad people, and only one-sixteenth of the injured are railroad men. The other nine-tenths killed and the other fifteen sixteenths injured work in shops, factories, on the farms, etc., but we have been obliged to take the curse of it all, and that is one of the reasons, gentlemen, why the North Western was the first to take up this safety movement so far as the transportation interests are concerned. After we had started it we found, very much to our surprise, that the Illinois Steel Company had been doing this kind of work for years before we commenced it, and ever since then I have been stealing Illinois Steel thunder, and I have got a lot of good things from the Illinois Steel people, for which I want to publicly express my thanks and appreciation.

As I have often said, the North Western is the best railroad, and therefore it started the safety movement first. Another of the reasons why we started it was because the year before we commenced our accidents resulting in fatalities and injuries to our men increased 37 per cent, over one-third more than they were the year before, and because the president of the North Western Com-

pany, William A. Gardner, is not only a far-sighted, but a humane man, and knew, as we have all learned to know, that every time we had an accident on the North Western Railroad and any man was injured or killed, it increased the risk to every man who was working around him because we have taken an old and experienced man out of the service and we had been obliged to put a green man in his place who would not know how to do the work properly. We also know that every time we increased that risk to the men who are working we decreased the efficiency of our organization for exactly the same reason. The benefit to the company comes in increased efficiency. The benefit to the men comes from increased safety. Somebody raised the question at the banquet we had Monday evening, whether safety paid. Does it pay any railroad, any institution that is doing business with large or small bodies of men, to be able to do their work more efficiently, more safely? Does it mean a saving to any railroad to have in twenty months 152 fewer death claims and 4,845 fewer injury claims to settle than it did the preceding twenty months? I think there is but one answer to that question, it pays, but at the same time we want to forget in the safety movement the question of dollars and cents. That is a question that we do not want to discuss, because human lives and limbs are so much more valuable than property or dollars and cents that we do not want to consider it at all. Nobody on the North Western Railroad knows what the safety movement has cost in dollars and cents. Nobody knows how much it has cost to put on new appliances, to adopt new standards, to hold meetings which are attended every month by 650 to 700 employes of the North Western Railroad, and the men are all paid for their time and their expenses, and they are paid exactly what they would earn, whether it is a full day or a day and a half or three days. Nobody has thought, even, of keeping track of what those expenses are, because the thought that has been first in the minds of the management of the company is how many lives can we save, how many limbs can we save, how many people can we save from destitution and poverty, and how much can we increase the efficiency of our organization?

In starting this safety movement, it was necessary in the first place to determine what we should do in the way of trying to reduce

accidents, and to do that of course it was necessary to first find out where most of our accidents occurred. It is generally supposed by the public, the same as they supposed that all these 35,000 deaths and 2,000,000 injuries were railroad deaths and injuries, that they occurred in train accidents. Very soon it developed, by the most casual examination of statistics, that the train accidents were the smallest part of it. And when I speak of train accidents I mean those accidents we see in the newspapers with great big headlines, those scare figures and scare letters, sometimes printed in red, telling about derailments and collisions. Of the seventy employes of the North Western Company killed last year only three out of the seventy were killed in derailments and collisions, and of the 5,907 employes that were injured on the North Western Railroad during that year, only 158 of them were injured in collisions or derailments, and so it was apparent to us, as it must be to you, that the accidents we desire to avoid are the little accidents, the little things that happen every day to the men that are jumping on pilots of engines, to the men that are stumbling over obstructions that they may perhaps themselves have left there when they pulled a draw-bar out of a car the night before, and the overhead obstructions and the nails projecting from planks and boards through our yards and shops, and the one hundred and one things all over the railroad, and these were the kind of accidents we undertook to put a stop to in the first place, believing that if we could prevent these little things, if we could stop the men getting hurt in little ways and gradually inculcate in them the spirit of thoughtfulness, or carefulness, and pull out by the root that old careless habit that we railroad people have been forming for the last fifty years, that we could put an end to the accidents generally and that the big accidents would take care of themselves. And gradually we are doing that. We have appealed to the men for assistance, and if ever an appeal was answered, it was answered by the men of the North Western. As I said before, we have the best and the safest railroad, and we have it because we have the best body of fifty thousand railroad men that ever drew breath. (Applause.)

And just as soon as those men commenced to understand that it was they, and not the officers, that were being killed, that it was they, and not the directors, that were leaving widows and orphans, that it was they, and not the stockholders, that were leaving depen-

dent fathers and mothers, because they were injured and killed, just that minute they commenced to boost for safety, and ever since then the North Western men have been boosting for safety, and, ladies and gentlemen, you all know we wear a little safety button with the North Western trade mark on it, and we are all proud of that trade mark, we are all glad to be connected with so good a road. Just as soon as those two little words that we added to the trade mark "Safety first" is burned in our brains so that it is always "Safety first" and not second or third or fourth or last, but always safety first, then we do things.

Now, we have on our road, as I say, safety committees. We have about 630 men serving on these committees. We have division committees, terminal committees, shop committees and roundhouse committees, and in addition to that we have what we call a Central Safety Committee to which all matters of general importance to the system are referred and acted upon, and, if approved, are adopted by the management of the company. Someone said at a meeting that I attended to-day: "Is this safety movement permanent?" Is it just a passing fad? The safety organization on the North Western Railroad and the other railroads that come into it, I believe, ladies and gentlemen, is just as permanent as the operating department. It fits in and dovetails with the operating department in a way that never has created one word of criticism. I remember the first time I went over the North Western Road on an inspection trip which was organized for the purpose of showing our men that a genuine inspection was wanted, an inspection for the purpose of finding things that were wrong and not right, for opening the eyes of the men who had supervision of the work to what was wrong on various divisions or in their shops, and when we got through, one of those men, an old friend of mine, said: "When I go home, Ralph, I am going to give myself ninety days" (laughter), and ever since then he has been a safety man. He was not much of one before. And that is the spirit in which the organization of the North Western Railroad has been carried on.

Now, whether we can run our trains and do our work and transport persons and property more safely when in twenty months we have 32 fewer trainmen killed, a reduction of 51 1-2 per cent, 2,183 fewer trainmen injured, a reduction of 42 1-2 per cent. 11 fewer switchmen killed, a reduction of 40 8-10 per cent, 222 fewer

switchmen, injured, a reduction of 20 7-10 per cent, is a question, I think, about which there are no two sides, because we all know that if we can keep the men at work so that they are not absent from their post by sickness or injury, we can make our trains run safer and with greater regularity, and because our trains do run safer and with greater regularity, and because the other railroads in this country have come to find that out, of the 240,000 miles of railroad in the United States to-day, on the 2nd day of October, there are 144,000 miles organized under Safety First. (Applause.)

Ladies and gentlemen, that is what, in a small way, in a short, brief story, I wanted to tell about the safety movement, why it was organized and what it is doing. I am very grateful to so many of you ladies, to so many of you men for attending this session instead of going out to the Automobile races we have here to-day where men, for money, for notoriety, are taking a gambler's chance. How serious that chance is you people who have read the Milwaukee papers know, because only day before yesterday one of them was killed and another fatally injured. It is a strange coincidence that on the day and hour when the Safety Congress is being held for the first time in the United States such a spectacle should be going on, and, stranger still, we all want to see it. (Laughter.)

I think I have taken up more time than I should in these remarks as we have here to-day a number of gentlemen, who have been kind enough to come to instruct and interest this audience, we will open our session with a paper on "Accidents Attributable to the Carelessness of Employes and How Best Best to Prevent Them." by A. Hunter Boyd, Jr., Chairman General Safety Committee of the Baltimore and Ohio Railroad.

Mr. A. Hunter Boyd, Jr.: Ladies and Gentlemen: After Mr. Richards has talked "Safety" there is not much to say. Anything else is in the nature of anti-climax. On the Baltimore & Ohio we learned about all we know about safety from Mr. Richards. In addition to that in the subject matter I am about to discuss I cannot hope to bring you anything new. This concerns the problems that Mr. Richards has endeavored to solve by instituting safety committees on the railways.

ACCIDENTS ATTRIBUTABLE TO THE CARELESSNESS OF EMPLOYES AND HOW BEST TO PREVENT THEM

Mr. A. HUNTER BOYD, Jr., Chairman General Safety Committee of the Baltimore & Ohio Railroad

The subject-matter that I am about to discuss is so familiar to all of you that it is idle to hope that I can bring you anything new. It touches on the heart of the safety problems in which all of us have been engaged for some time past—the problems that Mr. Richards first attempted to solve by the introduction of safety committees on the railroads. In presenting this subject, therefore, I am merely opening the discussion on this all important question, hoping that all of you will discuss the question fully and for our mutual benefit.

In treating this topic, I am assuming that the railroad company has done or is doing all that it reasonably can to avoid accidents, and therefore I will discuss only those accidents caused primarily by the negligence or the carelessness of the employes. I might state in passing, however, that our experience on the Baltimore and Ohio has taught us the necessity of the company doing everything within its power in the way of accident prevention in order to enlist the support of the men in the safety movement. On the divisions of our road where the company has done effective safety work and has carried out most of the safety committeemen's suggestions, on those divisions we find we receive the most earnest support from the men.

While my subject might include all accidents caused by the negligence of employes, whether to passengers, trespassers or others, I will limit it in the main to employe accidents. A glance at the Interstate Commerce Commission's annual report for the year ending June 30, 1911 makes it evident that the employe accidents are by far the most numerous and most serious. Leaving out of consideration trespassers killed and injured, we find that of the 5,112 killed, 3,602 were employes, and of the 144,545 injured 126,039 were employes. 70 per cent of the killed and 87 per cent of the injured were railroad employes. My omission of trespassers from this calculation is not because I would minimize the seriousness of that situation, but rather because I think it evident to all that we can accomplish little by safety work in that

direction so long as the Federal, State and municipal governments refuse to lend any effective aid.

Industrial Accidents to Employes

Taking up, then, the employe accidents, let us first consider briefly the so-called industrial accidents on the railroads. While as a rule such accidents are not nearly so serious in character as those in connection with the operation of trains, we must not forget that in the year ending June 30, 1911, 63 per cent of the railroad men injured were injured in industrial accidents. Our problems here are similar to those of every employer operating factories and shops as those problems will be discussed much more fully at this conference I will merely touch upon them here. It is undoubtedly true that every railroad company can, without the assistance of its employes, prevent a much greater proportion of the industrial accidents than of other railroad accidents. Effective guarding of all classes of machinery, clean and well-lighted shops, free from obstructions in aisles and passageways, glasses, goggles and other protection for the eyes—all of these precautions carried out leave comparatively few serious injuries to be attributed to the employes. On the Baltimore & Ohio we found most of our industrial accidents, other than those to be prevented by the employer, are the minor ones caused by the careless handling of tools and material. Unquestionably these are to a large extent difficult to prevent, as the most careful of us at times are injured in very much the same manner, even when we are not distracted by the noises of machines and the bustle of the shops. To reduce this class of accidents we endeavor to get the shopmen and other industrial workers as much interested as possible in the safety movement by placing them on committees and sub-committees, by distributing safety bulletins among them and by posting caution signs on machinery and at any place of danger in the shops with the safety emblem above the words of "caution" or "warning." In short, we try always to keep the safety idea before the men in every conceivable manner. Before passing from this subject, however, we must remember that guards on machines will not prevent accidents if not used, and unworn goggles will not protect the eyes. There must be constant supervision by foremen to see that the safety appliances are made use of, and the hurrying piece worker must not be permitted to place

speed and pecuniary gain above the safety of himself and of his fellow employes.

Accidents in Connection With Train Operation

With this brief mention of industrial accidents, let us turn to another class, to the accidents occurring in connection with the movement of engines or cars,—the accidents that are killing 88 per cent of the employes who are killed and that are causing a very large majority of the serious injuries. The Interstate Commerce Commission in its reports divides these into two classes, first, train accidents, and second, accidents in connection with the operation of trains not included in the train accident record. For convenience' sake I will discuss the second class first.

a. Accidents in connection with operation of trains, not including train accidents.

These accidents in the year ending June 30, 1911, caused the death of 2524 employes and injuries to 39,952, and in the injury list are contained most of the railroad cripples, men with one arm or one leg, or, too frequently, men without a leg or without an arm. The Interstate Commerce Commission's classification of the causes of these accidents may be briefly summarized: coupling or uncoupling cars, switching, coming in contact with overhead or side structures, falling from cars or engines, getting on or off cars or engines, struck by cars or engines. As a rule these are the one-man accidents, the "little accidents" as Mr. Richards has so aptly described them, but in the final result the most serious of all to railroad employes.

It is apparent that accidents of this kind can not in any large measure be prevented by the employer. Few, if any, more known safety devices can be furnished. With the exception of the elimination of structures of insufficient clearance, the best the employer can do is to keep the appliances in proper condition. These are, in the main, accidents due to some failure of the employe. Whether we call it negligence, carelessness, forgetfulness, it matters not; our problem is to eliminate accidents of this kind insofar as it is humanly possible to do so. We all realize they can never be eliminated but we also know that the number can be and is being largely reduced by the work of the safety committees.

The Breaking up of Dangerous Practices

Many of the most serious accidents of this class are the result

of certain dangerous practices carried on by the men,—practices which are so apparent and well defined as to make it unnecessary to deal in generalities in discussing them. Probably the most deadly of all is that of adjusting couplers by hand or foot just as the cars are coming together. In the year ending June 30, 1911, 209 employes were killed and2,966 injured while coupling and uncoupling cars. On the Baltimore and Ohio alone 6 men were killed and 167 injured in this manner. For the period of a great many months on our road two men each month lost limbs as the result of coupling and uncoupling cars. It is undoubtedly true that no real automatic coupler has been invented and that it is frequently necessary to adjust the drawbar, but it is certainly not asking much of the men to urge them to refrain from adjusting couplers when the cars are about to come together. They are paid for their time; they lose nothing by taking the time to couple safely; they risk everything by not taking sufficient time. On the Baltimore and Ohio we met with intimations from some of the men that they were practically required to couple in an unsafe manner or be disciplined for delaying trains. In answer to this President Willard, at a large safety meeting in Baltimore, said:

> I want the men to feel that in the matter of their line of work they are to take time to do it as safely as possible. The day of the link and pin coupling has passed, but our reports still show that many men get injured and lose their fingers from time to time by getting them in between the cars as they come together. We would rather that the cars come together and go back again any number of times in order to give you time to open the couplings than that you should be injured".

and this declaration was followed by a positive written rule prohibiting men from going in between cars to adjust couplers when the cars are about to come together. But more effective than any rule of the company is the co-operation of the employes. Between three and four hundred safety committeemen have been spreading this new doctrine among the other men, with the result that where eleven of our men lost hands or feet in the first three months of this calendar year, during which time we were organizing our safety work, but two men suffered similar injuries in the next three-month period. I have dwelt on this one practice at considerable length not only because this situation was so serious on our road when we started our safety work but because it illustrates numerous other well-defined dangerous practices that can

be broken up by safety committees. For instance, we found a number of serious accidents resulting from men riding on pilots—the pilots of our engines unfortunately having broad rims on them, an invitation to the men to ride there. We are now correcting this trouble by removing the rims, but until that work is completed we have issued orders prohibiting the riding of pilots. Here, again, we found the work of our safety committeemen and the co-operation of the men generally far more effective than any rule can ever be, and have had numerous instances of engineers refusing to move their engines until brakemen had gotten off the pilots.

Time will not permit further discussion of practices of this kind. The same remedies can be and are being applied to break up such practices as stepping from the center of the track to the footboards of engines rapidly approaching, men sitting on brake wheels, riding with feet on journal boxes, and others too numerous to mention.

Getting the Men to use More Care

Unfortunately, however, our task is not so easy as to be confined to the breaking up of well defined practices. Serious as they are, most of the employes are killed and injured in accidents which can not be prevented by rules or their enforcement or by any specific advice or warning that safety committeemen can give. Negligence, carelessness, forgetfulness, are broad and general terms, and it is extremely difficult to get down to the definite and concrete when dealing with accidents resulting therefrom until after the accident has happened. In the year ending June 30, 1911, 2,237 employes were killed and 35,463 injured while attending switches, falling from or getting on or off cars or engines, being struck by cars or engines and by other accidents in connection with the movement of trains exclusive of coupling and train accidents and of accidents due to insufficient clearances. Here are the majority of the deaths and serious injuries of our employes and here is the heart of the safety work. Without a safety committee the operating department of a railroad can, if it will, effectively guard machines, install safety appliances and make working conditions, tools and premises reasonably safe, but without safety committees the managements can do little to reduce the number of such accidents as I have just mentioned. Here, indeed, we have to get down to the "human element", to educate, warn, advise, and above

all, keep it up incessantly and without let up. It is a battle that can never end if lasting results are to be obtained. We must reach the individual and through him his fellow worker and so on throughout the ranks. Starting out with some hundreds of safety committeemen we can feel assured that these men will not only not take unnecessary chances but will be more careful on trains and on tracks than they were before they were instilled in the safety idea. As an illustration of this, on the Baltimore & Ohio we had three hundred safety committeemen at work for the first six months and only two or three of these received injuries, none of which was serious, and in each of these cases the injury did not result in any degree through carelessness of the injured man. A large majority of these men were employes in the ranks engaged in hazardous work. Against that record, counting all of our employes, officers and clerks, one out of every six was injured last year so as to be incapacitated from work for more than three days. By changing committees from time to time, other men get on the committees and are imbued with the same spirit. Practically all of the retiring members will continue to be real safety men and gradually by getting the co-operation of most of the men not on the committees we will find less negligence, less carelessness, less forgetfulness and less accidents. We will never reach the ideal, but can come so much nearer to it than we have in the past that all of us, officers and employes, will be ashamed of the accident record of the last few years. To instill Safety First in the minds of the men we ask our safety committeemen to talk safety at every opportunity to the men individually, at their lodge meetings and in every gathering place; to discuss recent accidents and consider how similar accidents can be prevented in the future. We hold night meetings, to which employes and their families are invited, using a stereopticon in addition to talks to graphically present the dangers to the men. Divisional committees are now holding open night safety meetings of their own at which one or more of the General Committee are present when it is possible. Our General Committee has attended lodge meetings of the Brotherhood of Railroad Trainmen at their invitation. We have issued monthly bulletins showing how accidents occur and how to avoid them, and are just inaugurating an employes' magazine which, while not a safety magazine, will be under the supervision of our safety committee and will enable us to keep

Saftey First before the men in a more readable and attractive form than in our bulletins. We are printing the safety emblem on pay envelopes and other company stationery. Our safety committeemen and ex-committeemen wear safety buttons. We are about to post certain safety rules in the cabooses, just a few rules which are especially applicable to trainmen. Indeed, it is difficult to do more than illustrate the numerous ways in which Safety First can be kept before the men at all times. Education, publicity and constant hammering is the only way to prevent accidents of this class, to make the careless man more careful, the thoughtless man more thoughtful. We must make the men realize that these "little accidents" are by far the most serious to them; that in the year ending June 30, 1911, 1,429 railroad employes were killed by being struck by trains, 39 per cent of the employe deaths being due to that one cause alone. On the Baltimore & Ohio in the year ending June 30, 1912, slightly over 50 per cent of our employes killed were killed by being struck by trains. This large percentage was partly due to our dense traffic on the main lines of the system, with trains running on two, three and in some places four tracks, but with all that, it is a frightful record from a single cause. Our section gangs have instructions, which are generally complied with, to step off of all running tracks when a train is passing, and we have been making considerable headway in the reduction of accidents to track laborers. But a very large percentage of those killed in this manner on our road are trainmen,—in the past year the trackmen killed comprising but 30 per cent of those killed in this manner. Our committee will be glad to know the experience of the other roads in this respect and how successful they have been in preventing accidents of this character.

b. Train Accidents.

This brings us to the last class of accidents which I will discuss—train accidents, and, in particular, collisions. While their prevention is not so important to the employes as is the prevention of the other classes of accidents heretofore mentioned, but 18 per cent of the employes killed and 5 per cent of the employes injured suffering through this cause, train accidents are the only railroad accidents in the minds of the public at large; they are the accidents that are emblazoned on the front pages of newspapers, and they are the

accidents that kill and maim our passengers who pay for and should receive safe transportation as far as it is possible to give it.

142 passengers killed, 6,722 injured in train accidents in the year ending June 30, 1911, is not a record to be proud of, and it is by no means the worst record of recent years. The number may represent a very insignificant proportion of the total number of passengers carried during the year, but no statistical figuring of that kind will satisfy the public and it ought not to satisfy railroad men. Aside from the fact that we as individuals are shocked by the horrible collisions that occur at more or less regular intervals, we also recognize that they are among the most potent causes of anti-railroad sentiment and the authors of burdensome laws. Most collisions, the most deadly class of train accidents, are unquestionably due directly to the careless acts of employes. For instance, considering only those thirteen collisions that occurred in the first three months of this calendar year and reported by the Interstate Commerce Commission in Accident Bulletin No. 43, we find two in which 9 were killed and 9 injured because signals were disregarded; one in which 3 were killed and 2 injured because of an operator's mistake; one in which 3 were killed because the crew failed to have the train under control; three in which 10 were killed and 72 injured because of improper flagging; three in which 13 were killed and 12 injured because of a direct violation of rules to keep their train clear of a superior train; and three in which 9 were killed and 12 injured because of a direct violation of rules or train orders.

In not a single case was the primary cause of the accident due to any other cause than that of "man failure" and these collisions were followed by those disastrous ones of mid-summer which are so fresh in your minds as to make it unnecessary even to mention them. And in those too, the man was the cause.

How to teach employes to avoid mistakes of the kinds just mentioned is essentially safety work, and a discussion of that question would be merely a repetition of my remarks in regard to employe accidents. In concluding this discussion, therefore, I want to direct your attention to the responsibility of the railroad managements, not for the furnishing of insufficient appliances or equipment or track, but for the failure to properly train and supervise the men who operate the trains and cause the collisions. It is merely

an attempt to get at what the *Railroad Age Gazette* recently said was the "cause of causes."

The greatest care is taken in the selection of engines, cars and other equipment and appliances, yet with all that we must acknowledge frankly that the most important factor in our transportation service, the men who operate the road, are given scant attention. You may reply that we get the best men we can, and that they are always under close supervision, are required to know the rules, are checked by surprise and other tests, but are you satisfied in your own minds that such is the case? Does not almost every serious accident investigation bring out the fact that some employe at least did not know the rules or habitually violated them? Can any of you say that in your journeys over your road and through your yards you seldom find men violating or stretching the rules, and I mean rules affecting the safety of trains? Is it not time for railroad men to face this question honestly, and is it not better to correct the evil now than to invite more burdensome laws? I realize that conditions are widely different, that some roads have better informed, better disciplined employes than have others, but consider the average American railroad, or, indeed, consider the best American railroads, and tell me honestly is a reasonable effort being made to enforce operating rules; reasonable, I mean, when you take into consideration the millions of passengers whose lives and limbs are at stake. Are we doing our duty when we send out men to operate trains without being certain that they know the rules and how to apply those rules, or when we overlook infractions of rules in those cases where no accidents happen, or, worse still, when, by our silence, at least, we encourage the infraction of rules because delay is thereby prevented or some lost time is made up? That this evil does exist in greater or less degree throughout the country will be admitted, I believe, by any fair railroad man. The editorial of the *Railroad Age Gazette* on the "cause of causes" was commended by Vice-president & General Manager Park, of the Illinois Central, who strongly urged real efficiency tests and their faithful carrying out; by a superintendent who frankly admitted that "we are only occasionally imposing discipline for fast running when an investigation would probably have shown conditions were unsafe for the speed actually made", and was commented on by a General Manager who clearly recognized conditions as they exist to-day.

Along this same line was an interesting discussion in the *Railroad Age Gazette* last March on the question of speed as an important factor in causing railroad accidents. Whatever view we may have on this subject it is uncontrovertible that many accidents would have been prevented had the trains in question been running at a more reasonable rate of speed. Of course, speed is a relative term, and 60 miles an hour is safer on some lines of road than 30 miles an hour on others, but, with all that, on many railroads in this country to-day Safety First is not the real moving force that its name implies when it encounters the forces of competition and the desire to break records. "The public demands speed" is a well worn phrase, but it does not lift one ounce of responsibility from the shoulders of the operating officers in charge of train movements.

This frank expression of an opinion that I know is held by many railroad men is far from being an endorsement of the many yellow journal articles written in condemnation of railroads and railroad men, but on the contrary it is for the purpose of directing your thoughts to this question in hopes that eventually we may remove all excuses for the unjust criticisms that we so frequently see. The secret of the success of the safety committee system is the frankness with which all suggestions are received and discussed, and we must get at the truth if we are to get results.

Lax discipline can by no means be laid at the door of the operating officer alone. He must contend with conditions that handicap him on every side. In these days of railroading by Commissions the superintendent is compelled to spend much of his time in explaining the affairs of yesterday and has little time left for attending to the affairs of to-day. Many laws passed ostensibly for the purpose of making railroading safer and better are so artificial and impracticable as to make worse the very conditions sought to be corrected. Many of the laws that we all recognize to be good in principle do not go to the heart of the trouble. The Hours-of-Service law which very properly prohibits service by trainmen for more than 16 hours does not attempt to govern the actions of the employes in their hours of rest. I was told recently of a telegrapher who engaged in the business of paper hanging each day at the conclusion of his nine hours of duty and who was so busy in that undertaking that he was compelled to paper a certain house on Sunday. In the recent collision near East Corning, N. Y., Mr. Bel-

nap reported that the engineer on whom was placed responsibility for the accident had admitted that he had taken two drinks of gin between 11 and 12 p. m., later visited a number of saloons and returned to his home some time after midnight, when he was scheduled to report at the roundhouse between 4 and 5 a. m. to run an important fast train. So long as such conditions as this exist the Hours-of-Service law will accomplish but part of the good intended. No law can compel a man to sleep or rest; but our Federal Government could and should, in fairness and with reason, prohibit those employes affected by the Hours-of-Service law from engaging in any form of business or employment beyond the time prohibited by law. If it be impracticable to go further than this by law, the railroads should supplement the law by such rules as that put into effect on the Baltimore & Ohio in 1908, prohibiting all employes engaged in work connected with train operations from using intoxicants, either on or off duty, under penalty of dismissal, or that recently adopted by the Baltimore & Ohio and the Delaware, Lackawanna & Western to the same effect, with the further prohibition against men visiting saloons or places where liquor is sold and enjoining the men to use their time while off duty primarily for obtaining ample rest.

Of course, there is a limit to the government of the actions of employes off duty, but we should go as far as we can, as in all events we must have safe, sober and clear-headed men in charge of the operation of our trains and all reasonable and proper means should be adopted to that end. The railroad brotherhoods should realize their responsibility in this matter. Their chief weakness to-day in the eyes of the public and of railroad managements is their failure to make Safety First a cardinal principle of their doctrines—too often placing what they regard as the rights or welfare of an individual ahead of the public safety, ahead even of the safety of their own members as a whole. These organizations should realize that they can do no greater wrong than that of urging the employment or retention in service of unsafe men. It is a wrong against the public, the railroad, the passengers, the other employes—yes, even against the unsafe man himself and against his family. We will have far fewer railroad accidents when the time comes, if it ever comes, when grievance committees, instead of urging the retention of unsafe men, will urge the dismissal of such men from the railroad service.

It is self-evident, I think, that the prevention of accidents caused by the negligence of the employes requires the concerted action of all concerned. The railroad company must use more care in the selection of its men and adopt more precautions and better discipline in their training; the Federal and State governments must enforce wise and salutary laws, but not hamper operating men by unwise and impracticable ones; and, finally, the men most concerned, individually and through their organizations, must adopt "Safety First" as their cardinal rule—at all times and in all places.

DISCUSSION

The Chairman: There are one or two things in connection with that paper that I would like to call attention to, first the point made by Mr. Boyd, that if we will exercise as much care in the selection of men to run these magnificent engines and trains as we do in selecting the engine and the train, and then after we select the right man educate him to do the work right and not to do it wrong, as he is often educated by going to work with some man who never did a thing right, we will make a marked improvement. Another question that he has raised is the time that is taken up by the various officials of the railroad in explaining things that happened yesterday. If we can reduce our accidents 50%, and it can be done, there will be just so much more time for the supervising officials of a corporation to attend to their proper business and not waste time in explaining accidents, and if you gentlemen will bear that in mind I think you will all realize how important are the questions raised by Mr. Boyd.

Mr. G. E. McCaughan, General Claims Attorney of the Rock Island: Mr. Chairman, Ladies and Gentlemen: I come before you to-day seriously handicapped in two or three particulars, one of which is a sore throat. Another is this, we often do not realize the peril we have been in until the peril is past, and then we perceive it with a great nervous condition which unfits us for the duties which are before us. Recklessly I came here this morning on the Milwaukee (laughter). I did not know that the North Western was the only road in the world, and I have been shocked at the risk I took ever since (laughter). Another handicap is the fact

that our road had not until recently organized a "safety first movement.

Mr. Boyd, reading his paper, spoke in none too complimentary terms of the great work the North Western has done as a railway, through its management, and especially through the superior and intelligent efforts of Mr. Richards, its general claim agent and head of its Safety Department. This pioneer work of Mr. Richards has blazed the way for the rest of us, and we gladly acknowledge the superiority of that work, and the aid it is to the rest of us in pursuing those lines. Mr. Boyd said too that after Mr. Richards' introductory remarks there was not much to be added but, excellent as those remarks were, we find in Mr. Boyd's paper a great deal additionally valuable information. It is one of the best papers upon this subject I have had the pleasure of hearing. He emphasized several points that you should all bear in mind.

There are the moral hazard, physical examination, the education and the discipline.

Is it true that railroads are getting the best material they can in the railroad service? Are they getting the best recruits? Has an intelligent, systematic effort ever been made to recruit the service from young, vigorous, intelligent men? Isn't it too much the practice to take up and place in service almost any fellow that applies for a job that can show he has sufficient muscular ability? The moral hazard is one of the great things that we ought to consider. The history, family connection, environment, the teachings, and the habits, of every applicant for employment ought to be looked into. If his habits are vicious in any respect, very vicious, he ought to be rejected. If he displays some viciousness because of unfortunate conditions but evinces a desire to do better and make a good man of himself, encourage him by giving him a trial, but keep in mind always that the moral character, the moral stamina, the high ideals, are necessary and valuable in brakeman or a section laborer, or any other man, just as well as they are valuable in any other walk of life.

It is said sometimes that certain structures are not built of the best material. The answer may be that the best material was not available, but the builder knows what sort of material is in that structure. Now, suppose you cannot get enough of the best material to man your railway, if you have carefully investigated the material

offered, carefully examined it, you know what you have and can operate with that light. It is true, just as Mr. Boyd and Mr. Richards have said, that there has not been the careful inspection of the men employed that there has been of the machinery and material purchased. A man engaging in this work of railroading, especially in the hazardous occupations, should be physically in excellent condition. He cannot be physically in good condition if he is addicted to the use of intoxicating liquors. I will not spend much time on that because it is said I am a crank on that subject, and I guess I am. His examination physically, and a physical examination should be made of every man engaged in the train, yard, shop, roadway, bridge, or other department, should be thorough and complete, made by competent men. A man should be examined for work in these lines as carefully as recruits for the army and navy are examined. The examiner should go over him from head to foot, examine every organ of the body, and see that he is fit.

Many a time some defect will be discovered that makes him unfit for the service and even for his own sake he should be rejected. For example, we have had, many of us I guess, many cases of developed hernia, this condition existing prior to the employment, perhaps not very conspicuous, but the over strain, the over exertion, the over effort, has developed it so that the condition is exceedingly serious, and the result often is a denial that such condition existed prior to employment, and you are responsible for the whole damage. Besides, that condition unfits the man for the service. He may be called upon in an emergency to perform some service for which he is physically incompetent and incapable, and does not perform that service and a disaster results. In my own experience, I have had a number of cases of eye injury. On examination the oculists have said: "There is a bad condition here, but I suspect there was something wrong with this man before this alleged injury. The examination so indicates." Now, you cannot go back often to ascertain the facts or the truth of that matter. No man should be employed who has a serious affection of the eye, so that I want to urge that the careful selection of men, the physical examination, be one of the great things to be considered and acted upon.

Then comes the question of education, which Mr. Boyd and Mr. Richards have both touched upon. I feel that it is wrong to place

a young man applying for the position of brakeman, for instance, out upon the road on a local, or other train, the first thing after his employment, to learn his duties. It seems to me, and I have talked to some conductors of great experience who approve of the thought, that an applicant for such a position should be placed with car repairers for awhile. Let them learn the anatomy of a car, how to operate the brakes, how to manipulate all the appliances, the couplers, and everything of that sort. Let him spend a month around headquarters. During part of this time he can be instructed, not simply to read over the books of rules and answer a few questions, but be instructed by a man who understands the rules, the use of the rules, what they mean, instructed in giving and receiving signals, in loading and unloading freight, and so equip himself that when he is called upon for train service he is ready.

I think my time is entirely consumed, and I will not keep you further. I thank you very much. (Applause.)

The Chairman: In connection with Mr. Boyd's paper I wish to add if we will just bear in mind that every accident is a notice that there is something wrong either with the man, the methods, the tools or the equipment, and make an intelligent effort to find out where that wrong is and then remedy it, we will cut out that class of accidents.

Mr. George F. Baker, Assistant General Adjuster of the Chicago, Milwaukee & St. Paul Railway: Mr. Chairman, Ladies and Gentlemen: I am very glad that Mr. McCaughan did not have an inkling of what our chairman's remarks in regard to the North Western were going to be before he started on his trip from Chicago this morning, but I want to say that the management of the Milwaukee road knows a good thing when it sees it, especially if it looks at it long enough and tests it, and so in regard to this safety movement the Milwaukee Company has made up its mind that it is a good thing and has adopted it and I assure you, Mr. McCaughan, that there is a division safety committee already on the division you rode over this morning and I think you can safely return that way. (Laughter.)

I have a great deal of diffidence in seeking to add anything to the ably prepared paper which Mr. Boyd has read. He has cov-

ered the ground so fully that there does not seem to be room to add very much. Another reason for my diffidence is that it is only very recently that the Milwaukee Road has begun the organization of its safety bureau. So that I cannot speak from a comparative standpoint as to any results which we have obtained. All that I can say is what we hope to do and what our ideas are on the lines along which we expect to work.

We have learned this much, however, in the preliminary work of effecting the organization, and that is that we must satisfy the employes on two essential points. First, that this safety movement is their movement, and that it is primarily for the benefit of the employe. As our chairman has stated, it is their lives that are being lost, it is their wives and their children that are being left widows and orphans, not the officials or the stockholders or directors of the company. That, of course, is very obvious to everyone, but it takes a good deal of hammering sometimes to make the men believe that, and to have them understand that there is nothing back of this movement except what appears on its face. I know what our experience has been. In the first meeting in nearly every instance where we have stated the division organization some man will get up and want to know if this is "on the square", and of course we can only assure them that it is, but when they are assured that the movement is "on the square", as they call it, and that it is for their benefit, I am certain we will have their hearty co-operation. When that has been accomplished then the real work of educating the men to look out for their own safety is just begun.

I feel considerable diffidence in attempting to add anything to the ably prepared paper which Mr. Boyd has read, for two reasons. First because he has covered the subject so thoroughly and second because the Milwaukee Company has so recently organized its Safety Bureau that I am not able to give any results from a comparative standpoint. In perfecting our organization however we have learned that if we hope to meet with any measure of success we must satisfy the employes on two essential points—one, that the movement is for the benefit of the employe primarily and is in earnest—and the other, that suggestions from employes will be given serious consideration and if found feasible will be adopted. When that has been accomplished the real work of educating the men to look out for their own safety has just begun. All crafts-

men are tenacious to the last degree of the traditions and customs of their trade and the railroad man is no exception to the rule, in fact I think he clings to them closer if anything than many other men who follow a special vocation. One of the chief of these is the idea that a fellow who will not "take a chance" will never be any good as a railroad man. In a sense this idea is correct for in the operation of trains emergencies are constantly arising where it is necessary that some risk of being injured must be assumed, but the trouble is the idea is carried too far, and the average man in order to prove his qualifications will *take useless chances*.

To illustrate: Go into almost any switching yard to-day, watch the switchman at work for a short time and you will be almost sure to see one of them stand between the rails of a track in front of an approaching engine until it almost reaches him then with the utmost nonchalance he will step on the foot board. This practice is prohibited by the rules of almost every road, but I have never heard of a man being disciplined or ever reprimanded for a violation of that rule.

So it is very plain to be seen that the making of rules is not going to prevent men taking foolish and unnecessary risks. Neither will it do any good to lecture and scold them. These men know the danger and the absolute uselessness of the practice I have mentioned as well as any one but each one seems to think that he will never make a misstep or slip and fall under the engine and that when he boards an engine that way he is demonstrating his qualifications as a railroad man.

If this notion can be over come and the employe be convinced that his standing will be gauged not by his willingness to take unnecessary chances but by his carefulness in avoiding danger a great stride will be made in reducing accidents. It sounds easy to do this but in my judgment it is one of the most difficult problems to meet and it cannot be solved in a day or a month or a year, and some of the men will never be convinced of their erroneous idea.

In a measure the idea of constant avoidance of taking unnecessary risks revolutionizes a half century of railroad men's notions and training. By training I do not mean instructions given by superiors to men working under them, but the constant, sometimes unconscious training the young fellows are getting all this time by example and by the talks at the experience meetings which are continually

held in the yard men's shanties, roundhouses, cabooses, eating houses at Division points, and other places where the men congregate both while on and off duty. The Safety Committee plan it seems is the most feasible way of bringing about this result and the function and object of every committee and of every member of each committee should be to constantly iterate and reiterate the doctrine of avoiding every unnecessary risk. Constantly convey the idea that in the very nature of the work there are enough unavoidable dangers in railroading without taking any chances with those which can be avoided. I am not qualified by experience to say which are the best methods to keep the safety idea in the minds of the employes but I believe that anything which will tend to get them talking or thinking on the subject is of value and speaking for the company I represent will say we expect to try as many of them as we can, believing as the old toper said about whiskey that all kinds are good but some may be a little better than others.

The Chairman: Ladies and Gentlemen, this paper of Mr. Boyd's is now open for general discussion. If there is anybody in the audience who has any remark to make, or any suggestion, I would be glad to hear from him.

Mr. JOHN P. GARDNER, Assistant Labor Commissioner of the State of Minnesota: Mr. Chairman: In Mr. Boyd's paper he made a very good point in regard to the assistance of the officials. In my experience in the state of Minnesota I have found the minor officials harder to get along with than the higher officials. For instance, I made an inspection of a shop, of one railroad not very long ago, and in my observations I noticed a man reaching for his belt shifter to start the lathe—at least, I presumed it was to start the lathe—but he moved the belt shifter towards the tail stop of the lathe instead of towards the head, and I went up to him and asked him what was the matter with his belts overhead, why he didn't get them changed so he could start his lathe in the proper way. "Why," he said, "if you can get that done for us I will appreciate it. I have tried to get that done for the last six months, but have not succeeded." We always called the attention of the superintendent of shops to the condition overhead, over the machinery, the oiling facilities. They had two planks loose across the girders, and a man had to get up there to oil the machinery, and there was

nothing to prevent him from falling. However, when we finished the inspection and gave the suggestions to the superintendent, he said: "That is going to cost quite a little money." I said: "I don't presume you will have to pay for it, will you?" He said: "No, but it is a hard matter to get material." I said: "All right, after you have put in your requisition and you find it is a hard matter for you to get material for this work, just write the Labor Commissioner a letter and we will take it up with your vice-president who has given us all the co-operation and all the assistance he possibly can in the main shop of this road," and it opened up his eyes to think we were in touch with his vice-president.

PREVENTION OF ACCIDENTS IN RAILROAD SHOPS AND ROUNDHOUSES

By George Bradshaw, General Safety Agent of The New York Central Lines: Read by C. W. Egan of the B. & O.

The great majority of injuries in shops and roundhouses very naturally occur in the use of tools, machinery and appliances. Of the preventable portion of this class of injuries, according to my observation, a larger percentage is due to improper physical conditions than to improper methods or personal carelessness.

It follows, therefore, if this conclusion be correct, that the chief factor in the prevention of injuries from these sources consists in the installation and maintenance of proper safeguards. In other words while training of the "human element" is important in shops and roundhouses as elsewhere, and should not be neglected, it is believed that in these particular branches of the service, the most serious attention should be given to a regulation of physical conditions.

For many years, voluntary or otherwise, we have been adding safeguards to our cars and engines until to-day it is difficult to think of mechanical devices required to make this class of equipment more safe. But while we have been turning out cars and engines well-nigh perfect in this respect, until recently we have done practically nothing in the way of protecting, by safeguards, the multitude of men engaged in making these cars and engines from injury by

the numerous complicated and hazardous machines used in the manufacture and repair of running equipment.

It is true we have "Safety Appliance" laws in most, perhaps in all, states; and factory inspectors whose duty it is to assist in their enforcement. The fact remains, however, that not until recently has a great deal of attention been paid to these laws. The purpose of these laws is all right, but they are too general and indefinite, and railroad men are beginning to realize that safety laws and factory inspectors can at best accomplish only a small part of what is really required to make our machines and shops reasonably safe. In all of the large shops of the New York Central Lines, we have, and have had for some time, a large force of men working continually installing safeguards. This work is being done in spite of the fact that inspections have been made by factory inspectors and the shops pronounced O. K. We knew they were not O. K. because we read the accident reports. But we are trying to make them O. K. and believe they will be when we get through with them.

The following are some of the principal causes of injuries in shops and roundhouses:

Unguarded Machinery

The safeguarding of machinery is a subject too extensive to be treated in detail within the limits of this paper. I shall, therefore, attempt to discuss the matter only in a general way. Familiarity with machinery arising from constant use has a tendency to create in the minds of many operators a sense of disregard for the hazards existing and, in fact, in the minds of some, even a contempt for such hazards. The application to a machine of a practicable safeguard not only serves to prevent injuries which might result from the use of the machine, but, at the same time, serves indirectly the useful purpose of impressing upon the operator the importance of safety precaution on his part. In other words, safeguards exert a mechanical and a moral influence.

In application of a safeguard it should be remembered that we are obliged to protect not only the careful but also the careless employe. In fact, so generally and completely should machinery be guarded that even the most careless and reckless man in the shop will be protected.

Safeguards, whenever possible, should be so constructed that they will provide automatically the necessary adjustment, as, for instance, guards over gears at ends of lathes, which must necessarily be opened in order to adjust the gears, should be attached to the machine by hinges so that the guards will swing shut of their own accord, thus preventing a careless operator from removing the guards.

Guards for circular saws should extend completely over the teeth of the saws and be adjustable by means of gravity to varying thicknesses of timber. In other words, where possible, a safeguard should be made "fool proof."

The following are some of the machines from which protection is especially necessary.

Planers. The openings in the base of planers beneath the carriage should be covered by thin sheet metal to prevent employes from depositing therein material or tools, thus rendering themselves liable to be injured by movement of the carriage. If this cover be properly applied it will not in any way interfere with the operation.

Band Saws. The upper and lower wheels should be completely enclosed on both sides. The teeth on the back or return part of the saw between the table and the upper wheel should be protected by means of angle irons so that the operator cannot come in contact with same. There should also be an angle iron or other form of protection in front of the wheels to prevent the saw from flying and striking one in case it should break.

Set Screws on Revolving Spindles. These, wherever located, should be countersunk or protected by safety collars. Many serious injuries result from exposed set screws.

Fly Wheels, Pulleys and Gears, within seven feet of the floor, should be enclosed so as to prevent contact with movable parts which might occur on account of slipping or falling, or on account of clothing becoming caught and also to prevent injuries which might be due to striking movable parts with material or tools.

Belts of Large Size, if located over passageways or places where employes work or congregate, should have a structure extending the entire distance beneath the pulleys, of such material and construction as will prevent the belt, in case of breakage, falling and striking one.

Walkways for Oilers. Where necessary to oil overhead machinery, a secure passageway with railing on each side should be provided for the entire distance necessary to traverse. In many shops, no protection is afforded men whose duty it is to oil overhead machinery. They are required to crawl along beams, narrow planks unsecured, and, in some cases, to crawl between fast moving belts where a slight misstep or slip might cause them to be caught and crushed to death.

Emery Wheels. The greatest trouble with emery wheels is not in their breaking, although this does happen occasionally and sometimes results in serious injury. More trouble arises from flying particles of dust thrown off which frequently cause injuries to the eyes of operators. Such injuries, it is true, are generally not serious, but they are annoying, and do cause considerable loss of time. Protection can be afforded against injuries by breakage by means of a guard extending entirely around the rim surface of the wheel, except the necessary grinding surface above the rest. The guard should be made of boiler plate or material of equal strength. Enclosure of the sides of the wheels is not, as a rule, necessary since it has been found by experience that when the wheel breaks the pieces do not ordinarily fly to the side with sufficient force to cause injury. Protection from flying particles can be afforded to a considerable extent by attaching to the guard a glass shield extending over the rest.

The breaking of emery wheels is, perhaps, more often due to material becoming wedged between the rest and the rim of the wheel than to any other one cause. For this reason, great care should be taken to see that the rest is kept as closely adjusted to the rim of the wheel as possible. The Norton Company, Worcester, Mass., have given considerable attention to this subject and have incorporated their experiences in an interesting and valuable illustrated pamphlet entitled "Protection for Grinding Wheels," a copy of which all who are interested would do well to procure.

As a general rule sufficient scrap material can be found about the average shop for the construction of necessary safeguards and, where possible to construct the guards in the shops, this is much preferable to buying a safeguard, for the reason ordinarily that "home made" guards serve the purpose better on account of being constructed for the particular machines to which applied

and employes are likely to be more interested in guards which they construct themselves than in those which the Company buys.

Insufficient Light

Injuries are often indirectly due to insufficient light. But few of our shops are lighted as they should be. The efficiency of the lights provided is greatly impaired in many shops by a failure to keep the lights properly cleaned and maintained. The fact that dirt and soot rapidly accumulate on the globe of lights in shops, it would seem, is permitted to serve as an excuse for not cleaning the lights frequently, whereas it is just the reason that they should be cleaned frequently. In every shop or roundhouse of consequence some one should be designated to clean and attend all lights at least every other day. Electric lights, of course, are the most satisfactory and the Tungsten style of lamp has been found to give the best results.

Natural light, especially in new shops, can generally be provided by means of windows and sky lights. These should be kept cleaned regularly and frequently.

Closely related to light is ventilation which should always be provided for, especially in blacksmith shops, grinding rooms and similar places by special overhead construction. No forge or hearth should be operated without a hood of ample size having exhaust out of building.

Flying Particles

Many eye injuries of serious nature are due to pieces of metal thrown off in chipping or grinding. These injuries can be largely prevented by providing employes in this branch of the service with goggles. Goggles to be used by those engaged in chipping should be made of thick glass; for grinders, an ordinary cheap style of goggle which can be purchased for about five cents each or less will serve the purpose.

It is often urged by those who oppose the use of goggles that employes will not wear them. In the principal shops of the New York Central Lines, some weeks ago we distributed to employes who have occasion to do grinding or chipping a supply of goggles with a request that they give them a trial. We have just received reports to the effect that employes very generally volunteer to use them and express themselves to the effect that the goggle is a "good thing."

We are, therefore, arranging to supply every man whose duties require him to do metal chipping with a pair of goggles especially constructed to afford protection from this source. We have decided to use the goggle known as the Julius King No. 1021-3040 which is the goggle adopted by the International Harvester Company and by many of the plants of the United States Steel Corporation, both of which concerns, we are informed, tried and tested various styles before adopting this particular make.

We are arranging to provide employes using grinding wheels with the ordinary style of goggles above referred to. It is not our intention to compel employes to use these goggles, except so far as we may be able to do so by arousing their desire to co-operate in the matter and, from our experience, we feel that they will be quite generally used.

Obstruction of Passageways

One of the most prolific, as well as unnecessary sources of injury to employes in shops and roundhouses is the obstruction of aisles and passageways by tools, rubbish and materials. In every shop, positive instructions should be issued and enforced requiring all employes to keep passageways clear. Any one who has made frequent inspection of shops will realize the necessity for these instructions. Not only does the obstruction of aisles and passageways present a probable cause of injury but it greatly interferes with the proper movements of employes and thereby decreases their efficiency. It requires practially no effort or expense to keep aisles and passageways clear; it is simply a matter of habit. A shop, like an office or residence, can be kept in a disorderly and untidy condition, or in an orderly and proper condition, depending upon the one in charge. It ordinarily requires but little time to get employes in the habit of storing tools, material and rubbish in proper places and in a proper manner. In one shop I know of, the passageways are clearly indicated by white lines painted on the floors. Employes are required to keep the space between these lines entirely clear of obstructions. As a rule, I doubt if it is necessary to indicate the passageways by means of lines or otherwise as their limits are generally well understood.

Foremen in Charge

The prevention of accidents in shops and roundhouses depends,

to a considerable extent, upon the foreman. If he is impressed with the importance of accident prevention and is personally interested in the subject, he will find numerous ways of preventing injuries which could not otherwise be effected. Therefore, those who are in charge of safety movements will do well to convert, if necessary, the foreman and those in immediate charge to the cause of safety. There should, in fact, be fewer injuries in proportion to the number employed, in shops and roundhouses, than in any other branch of railroad service for the reason that the foreman has his men congregated in a very limited area where he knows them personally and is constantly in contact with them. In other words, he can, if he will, see and know just what employes in the ranks are doing or not doing to make their work safe. As is the foreman, so will be the employe. Therefore, general officials in charge of shops should impress upon those in immediate charge of men that they will be held personally responsible for every case of injury in their jurisdiction which could have been prevented by ordinary prudence and vigilance.

The following are some of the precautions which employes in shops and roundhouses should observe.

Don't wear loose, baggy clothing in working around moving machinery.

Don't walk on railroad tracks and before crossing *any track* "Stop, Look and Listen."

Report all unsafe conditions and practices to the Foreman in charge or other proper person.

Explain fully to your helper the proper methods of work. A little time spent by a mechanic in imparting instructions to his helper may save one or both an injury.

Never jump on moving cars or engines. This is a risk which no shopman is required to take and which he cannot afford to take.

Never strike tempered steel with hammer or other metal objects.

Stop machine before oiling, wiping or repairing.

In shops of the New York Central Lines, we have attached to every machine, the nature of which makes it at all necessary, a metallic sign reading "Stop this Machine before Repairing, Oiling or Wiping."

Foremen should be required personally to give every employe entering the service full and complete instructions concerning the safe methods of doing the work to which he is assigned. He should require employes, and enforce the requirement by discipline if necessary, to keep all safeguards in proper position and especially should he investigate carefully all cases of injury in his jurisdiction with a view of avoiding a recurrence. After all, eternal vigilance is the price of safety.

DISCUSSION

The Chairman: I want to say in connection with this paper of Mr. Bradshaw's that has interested us all so very much—it is naturally a good paper because Mr. Bradshaw was originally a North Western man. (Laughter.)

Mr. E. J. Brewster: Chairman Locomotive Dept. Safety Committee of the North Western. So far as we are concerned, we agree with most all of Mr. Bradshaw's suggestions.

Covering machinery: We have gone quite extensively into the covering of gears to prevent accidents. We cover the band saws just as he specifies, and guard the planers as he specifies. Set screws on revolving collars and revolving spindles. We have put in the headless set screws in all cases. "Fly wheels, and pulleys, and gears within seven feet of the floor should be covered." We have done that, not to that height but within five feet of the floor, covered up all belts and pulleys and revolving wheels.

The Chairman: Has that work all been done through the instrumentality of the safety committee of the shops?

Mr. Brewster: Yes, sir, every bit of it. We put up gangways and railings for oiling shafting where there was no other way to get up to oil it. That is where they would have to take a ladder.

Emery wheels: We have covered all the emery wheels just as he recommended, and have also put the glass shields on the emery wheels. Lots of the men objected at the time they were put on, and said they could not see through them, but now the men use them in almost all cases. If we catch a man not using the guards we call his attention to it and tell him they are put there for his safety and he must use them.

Insufficient light: In our new shop the light is all right. In the old building the light is not as good as it should be, but we are working on that now and have put in Tungsten lights, and have made the light much better than it was.

Flying particles: We have not provided any goggles for our men, as Mr. Bradshaw recommends here, but we have screens where men are chipping which we put up to catch these flying particles so they will not injure persons passing by. We require the men to do that.

Inspection of passageways: We are kind of up against it a little on that in the old shop on account of the congested condition. We haven't the room we should have and it makes it a little more congested than it should be. Mr. Bradshaw says it is an easy thing to do, but it is one of the hardest things in the world to do, to educate the men to put these things where they should be and keep the passageways open.

Now, take the forman in charge. Our shop safety committee is composed of the foreman of each department and a workman of each department. The workman is changed every six months. The foremen and safety committee men, all members, even after they have served their term of six months, are still on the committee and their instructions to anybody are taken just as much heed of as those of a man who is serving on the committee at the time, and if he goes to a man and recommends anything and the man says anything to him he reports him to the foreman, and all these men are instructed if they see a man doing anything or following any dangerous practice that it is their duty to call his attention to it and stop it, and show him the right way to do it, or stop it altogether and call the attention of the foreman to it, if he objects.

He says here—one of the things that is in his paper, one of the greatest things, I think, in the safety movement, is the instruction

of the men to make the men safe. The hardest thing in the world is to instruct the men. I think the men are the most dangerous thing there is. You can put on safety appliances and everything, but if a man does not use some effort to protect himself he is bound to get hurt, and that is one of the biggest questions; if all men were careful there would be less injuries.. But you have to get after the man that is careless and instruct him so he will be safe. That is one of the biggest issues, I think, in the safety movement.

The Chairman: That is, you want safety men more than you want safety things.

Mr. Brewster: Yes, sir, men that are safe. As Mr. Bradshaw says at the end of his paper: "After all, eternal vigilance is the price of safety."

Mr. George Winter: member of the Winona Shop Safety Committee, of the North Western: The first thing I want to talk of is co-operation. Co-operation, I believe, is the thing we must work upon. I know it is true with our men in the shop. They were afraid of this movement when it was first installed twenty months ago. They thought there was a nigger in the fence, something behind it, and would have nothing to do with it for that reason until we began to produce the goods and let them know it was something for their personal benefit.

For a concrete example, a boilermaker was punching a piece of metal with a broken punch and every time that punch was used it went down there with a good deal of effort until it jarred itself through, and this man spoke to him and told him to take it into the tool room and get it fixed. He looked up at him with some sort of resentment and said to him: "Who are you?" Now, take this example, which is a concrete one: This boilermaker wanted to know who this safety committee man was, because he was one out of the ranks, and he did not care to be corrected by him. He said: "Well, I am on the safety committee, that is my business." "Well," he said, "it doesn't make any difference to you if I do lose an eye or an arm, or anything else, it is none of your business." He said: "If I get hurt the company will pay me for it." Well,

this safety committee man considered awhile and said: "Bob, I will give you $100,000 for your eye." He said: "Do you think I am a fool?" That was a pretty good test. He got the idea, didn't he? And he took the punch out and went into the tool room and had it fixed.

Now, there is co-operation. Don't drive the man, but hold it up to him and show him what it is, and then you have him and he is going to stay with you, and that is the way you are going to get safety that is going to last, and it is effective too. But I think it is up to us who use the tools more than anyone else to watch the defective tools and report them and take them in. If you cannot get them repaired, take them to the safety committee yourself and see that they are thrown away. You will find in the reports of the commission to-day there are less eyes lost, by reason of this safety movement, because they have taken care of defective tools. Laws are cold things. It is easy to get a law. We have in Minnesota lots of good laws, but not many of them are enforced. The Labor Commission has done good work in Minnesota of late. When it was first inaugurated politics had too much to do with it, and the corporations did not recognize the Labor Commission to a very great extent, because the inspectors only walked through the shops with a wise look and marked it with their O. K. Mr. Chairman, we have inspectors there to-day who go out into the shop and put on overalls and look at these dangerous places with the oiler.

Unguarded machinery: This has all been cared for, Mr. Brewster has covered this. The Winona shop is very much on a parallel with the Chicago shops, and I want to say right here the enthusiasm we have in Winona we have gotten from our master mechanic largely. When this movement was introduced he said he would shut down the shop for fifteen minutes, and he called the five hundred men around him and told us what safety was, and he said: "I want you to get the habit." Mr. Coleman is an enthusiastic supporter of the safety movement. He gave us that enthusiasm along this line up there. He is our master mechanic.

As to unguarded machinery on lathes, the top gears of our lathes have not been guarded until recently. That is, the back gears of our lathes, and now we have put on a shield and it is on the hinge effect, and it is always closed and the gear is not

exposed. Before we only had the regular driving gear enclosed. We have eliminated projecting set screws, and all of that, until we have made it, as they say, "Fool proof."

I might give a little experience about "fool proof." It is not always the fools that get hurt, after all. Sometimes our minds are occupied with other things. One time I was working in the shop and the foreman brought in a gasolene tank and he said: "Grind these valves in quick and get it back to the heating gang." I went at it and ground the valves, and there was a valve down yonder and I could not see it. From force of habit—we always had a match—and I struck the match, never thought of the gasolene tank, but pulled the match out unconsciously and struck it. You know what happened. (To the chairman) That was the only report you ever got out of me. (Laughter.)

The Chairman: Well, you don't want to waste time making reports.

Mr. WINTER: But that "fool proof" is all right, It affects us all because I suppose we will all be a fool once in awhile.

All fly wheels and the pulleys of our main engines have been protected. They were not before this safety movement began. A railing has been put about them and the belts protected. Some of our main belts in the shop are not protected, but orders have been issued and the instruction given "Do it now," and it will be done when I get back home, those belts will be guarded.

I had "emery wheels" checked. Mr Brewster spoke of this guard. I have seen three of our wheels broken because there was no guard on the inside between the frame and the wheel and articles wedged in between there and the suddenness of that wedge caused the spread of the wheel and away they went. It is not from the top and it is not from the grinding face it is broken, but it is from this side wedge, and I suppose all our emery wheels in the shop have been broken in that way, and I think it is possible for us to go back home and get something on the inside of the wheel to protect it.

Flying particles: An example of this is in chipping cylinders. We have the guard, and we have the goggles to go with the guard. Now, the matter of passageways: You know how our passageways

work, and it is quite a hard thing in the old shop where we have no cranes, or anything to pick up stuff, to get it out of the road. Wheels, axles, and anything you can think of in the shop, drop in the passageway. There is just enough room so you can get out and not care about the other fellow. We can remedy that a good deal, I think. The white lines mentioned in the paper would be a hard thing to carry out in our old shops, but we will use a little common sense and judgment. That is going to help us more in the safety work than anything else.

As to the pits, and keeping them clear, it is a good habit to get into. We have one man, a former member of the safety committee, who keeps his pits clear all the time. You can walk down either side of the engine and it is all perfectly clear, because he always keeps his work cleaned out and the old material is carried away. Get the habit. The individual man must take care of that himself.

In regard to the lights in the shop, our shops are cared for well in regard to lights, but the round houses—you all know what round houses are, especially in the winter time, when it steams and fogs—it is a hard matter to get through there sometimes, but we must work together on that and be as careful as we can in getting the light and clearance of the smoke and all things along this line, and make the round house as safe as we can.

In regard to foreman we find this is the case: I don't like to hear anybody go for a foreman. I suppose some of you boys here know what it means. The man directly in charge is the man that has the hardest job to do, I suppose, because he is responsible for the output. He comes down with a blue-print and says: "This engine has to be out to-day," and he is going around with his head full of outputs until he hardly knows which end he is standing on, and things are unsafe right in his own presence and he doesn't know it. When you speak to him he is sore. "Why don't you go to the other fellows, they are just as bad as I am?" "Yes," I say, "but we begin at you and then we take the other fellow." That is the way we are going to get along with the foreman directly in charge. Go step by step until we get them all, and then we go on until it is a complete unit. And unit safety is what is going to make for success in this "safety first," Mr. Chairman. (Applause.)

Mr. SMITH: Mr. Chairman, I notice our friend over here (referring to Mr. Winter) had a good deal of trouble in getting his aisles cleared. He had to pick up by hand. There is made, a little portable crane which runs all over the shop which will help you that way a great deal, and help you put your stuff in the lathes. It has worked very successfully in our shop.

Mr. WINTER: That might work all right if you have anything to run it on. If you have tracks full of wheels from one end to the other, you cannot run a crane over it.

Mr. SMITH: Run it over the floor, anywhere, outside or inside. One man will pull it.

PREVENTION OF ACCIDENTS TO TRAINMEN — WHAT CAN AND HAS BEEN DONE

S. M. BRADEN, General Superintendent "North Western"

The problem of preventing accidents to train and engine as well as to other employes is one that has engaged the attention of Railway Managers in an increasing degree during the past few years.

In the earlier days of railroading the employe was expected and required to be aware of and to assume the risks involved in train operations and, while the density of traffic remained light, the risks were few and fundamental only.

The trainman of 50 years ago was subjected to the recognized hazards such as are always present in connection with poorly constructed tracks with light rails and insufficient fastenings and foundation causing frequent derailments at even a moderate speed; lack of co-operation among untrained and unexperienced employes; ignorance in regard to safe construction of locomotives and cars; lack of fencing of right of way to prevent live stock from straying upon and in some cases using the tracks as bedding or resting places; competition in speed as between rival lines, recklessness on the part of its, at that time, untrained and undisciplined employes and various other circumstances and conditions with which many of us who are still in the harness are fully familiar.

In these earlier days trainmen and enginemen were selected, and retained oftentimes after having fully demonstrated their in-

efficiency, through influences more personal than would to-day be considered permissible or wise.

Railroading was then in its infancy and the possibilities of the future were not fully appreciated by those in charge.

Immediately following the close of the Civil War, however, the transportation necessities increased rapidly and prodigiously and in much greater measure than transportation facilities with the inevitable result that facilities were hastily provided with the single idea of quantity without reference to quality.

It is not therefore to be wondered at that during this period of rapid expansion in facilities and forces more attention was paid to the, at that time, recognized essentials, than to the conservation of the lives and limbs of the employes.

Human life was held cheap, and mutilated men were a common sight in the days immediately following the Civil War.

Railway managers, in more recent years, have however, been brought face to face with a necessity for conservation of both labor and materials and, regardless of the circumstances producing this situation, it is gratifying to note that their conservation policies are now being extended to cover the lives and limbs of their employes.

Co-operative efforts on the part of employes' organizations in effecting the placing upon our Statute books both State and Federal, of laws more clearly defining the liability of the employers, especially the corporations, has no doubt been a prominent factor in the awakening and it is to the credit of railway managers that during the past two years more real and effective measures of safety have been adopted than during any previous twenty-year period in the history of railroading.

All railways of any importance issue what are known as Operating Rules and the present standard rules which are in use on practically every railroad in America are the result of many years' experience and if observed by the employes generally, would reduce the accidents occurring to train and enginemen as well as yardmen very materially.

It is unfortunate, however, that included in the vast army of railroad employes we find such a variety of characters that among them are, through the inability of employing officers to determine in advance of their employment who are and who are not fitted for

railway work, many or at least some who are not sufficiently impressed with the importance to the whole organization of a strict compliance with these rules.

Such a leaven in a body of this character is a serious menace to the organization as a whole and while it is the constant effort of Division as well as General Officers to eliminate such undesirable employes from the service and to neutralize the unfavorable influence, the fact remains that there is a well defined disposition on the part of the *average* employe to evade if not wholly violate the rules designed for his protection

There is also a growing tendency, on the part of the Railway Employes' Organizations, to interfere with Division and General Officers in the application of discipline covering infractions of various operating rules.

While Railway Managers, in general, have no prejudice against the organization of their employes, for their protection and betterment and appreciate the advantages, to both the employes and the companies of treating with their employes as an organization rather than as individuals they naturally and with reason look with considerable apprehension upon the indicated intention of the organizations to furnish protection to their members without reference to the effect upon discipline.

This phase of the situation is admirably treated by Mr. Fagan in his book entitled "The Confessions of a Signalman" and with which you are or should be familiar.

In our judgment Mr. Fagan has made the most scathing arraignment of this tendency and his conclusions carry conviction by reason of fact that his personal experiences have been such as to enable him to secure his information first-hand from the view points of both the employes as represented by the organizations, and the disciplining officials and we cannot too strongly recommend a perusal.

Operating rules, through a process of elimination and evolution, now cover practically every function of an employe. Many of them might, to a layman, appear ridiculous and unnecessary, but experience has proven that it is only a small percentage of human beings in any avocation that can be depended upon to exercise judgment and good common sense in many situations, hence the necessity for such a broadening of the scope of Operating Rules.

Many rules are an insult to the intelligence of employes who are intelligent, and loyal, but are an absolute necessity in their present form to control and guide the man who is inexperienced or reckless or indifferent.

A careful investigation of the accidents involving loss of life and limb among the employes in train and engine service shows that in a large percentage of accidents in which such employes were injured, the real cause is traceable to the failure of some fellow worker to do his full duty.

In many cases the immediate cause is hard to determine but in 99 per cent of the cases a searching investigation will develop the fact that somewhere and somehow some one has slighted his work or failed to measure up to the standard requirements both of rule and duty.

For instance, a locomotive breaks an important piece of its mechanism while running at full speed, the break may be, for example in the side rod; the engine does what we call "strips herself." While the stripping is being done the engineer or the fireman or both, and in some cases the forward brakeman, if on a freight train, are killed or injured by the flying pieces, occasionally a whole train load of passengers is involved in such an accident and the results are too frequently a matter of record and comment in our press dispatches.

Investigation may show that some two weeks previous, when the engine was in the shops for general or running repairs some machinist charged with the duty of properly assembling and fitting the parts, failed through any one of a variety of causes, to do a good job.

Following him an inspector, charged with the duty of absolutely knowing that the work had been done properly, through carelessness or indifference or both, fails to detect the error.

Subsequently the engineer, to whom this engine is assigned, fails to measure up to his full responsibility, and, being a little late in getting around, makes his inspection hurriedly, if at all: concludes that the engine must be all right because he knows the machinist who did the work and the inspector who passed upon it and has such confidence in their ability that he neglects his part in the chain of precautions and the results are chronicled in the newspapers.

We have therefore come to appreciate the absolute necessity of

protecting our men from the results of carelessness of their fellow employes.

Accidents to trainmen, enginemen and yardmen are classified under various heads.

We classify them in our safety work as avoidable and unavoidable.

Our efforts are most strenuously put forth to place the so-called unavoidable accidents in the avoidable class and by various means reduce the avoidable ones to the minimum, which theoretically is zero.

With this idea as a basis, viz., that all injuries to trainmen, enginemen and yardmen are the result of failure on the part of some fellow worker to comply with the rules or exercise ordinary prudence. Railways in general have organized their officials and employes into bands of missionaries and inspectors known as Safety Committees.

The first requisite in any movement of this character is enthusiasm directed and held in proper channels by a well developed organization, and on the railway we have the honor to serve, the organization is known as the Safety Committee.

This organization, which meets once each month includes employes in every department reporting to a division organization which in turn reports to a central body.

The employes include men from each department as well as the foremen.

Division Committees are generally presided over by Division Superintendents.

The Central body includes division and general officers and in its personnel represents every class of operating employes.

Employes' committees receive reports, complaints and suggestions for elimination of dangerous conditions from all employes who may desire to be heard.

It is made easy for any employe in any department to file a complaint by a liberal distribution of mailing cards in proper form to insure the minimum of inconvenience and effort to the employe in reporting or complaining.

Such recommendations or complaints as the Employes' Committee can handle under the authority given them in the way of expenditure are cared for, and such as are beyond their authority are referred to the Division Committee.

In the Division Committee, which as indicated, is usually presided over by a Division Superintendent, matters passed up from the various employes' committees are considered and dangerous conditions eliminated locally to the extent of the Division Superintendent's authority as to policy and expenditures.

Matters beyond the jurisdiction of the Division Committee are passed on to the Central Committee for consideration and action or for further recommendation to the management.

It is manifest that a suggestion made by an employe, approved by his committee and having the approval of the Division and the Central committees will be given careful consideration by any manager.

Every employe takes an especial pride in having his suggestion taken seriously and acted upon and our policy is to give serious attention to every employe's suggestion and if it has merit adopt it. If without merit we endeavor to and usually with success indicate to that particular employe *why* his suggestion cannot be adopted.

The next suggestion he makes is usually one that is of value and along practical lines.

Every employe making a suggestion is given credit for it in the reports of the proceedings of the various committee meetings and it appears to be a matter of great satisfaction to an employe to have his suggestion pass the various committees and bear the approval of the Central Committee even though same is not eventually adopted by the management.

In addition, on the railroad we represent a beautiful and expensive banner is each year awarded to the operating division which, all elements considered, has made the best showing in reducing the number of accidents involving employes.

Competition for the honor of holding this banner is very keen as between the employes as well as the officials of the different divisions.

The award is made by the Central Committee after a careful consideration of the results obtained on each division and after giving due consideration to traffic conditions.

The award for the year 1910 was to one of the smallest divisions, but for 1911 was to the busiest division, mileage considered, of the system.

You have no doubt read something of the plan of our organization in the daily press as well as in trade publications and we apologize for taking up so much time with mere details.

As near as we can learn the Safety movement originated within the official ranks of that soulless corporation known as the United States Steel Company.

It remained, however, for Mr. Ralph C. Richards, General Claim Agent for the Chicago & North Western Railway to see its advantages as applied to railway operation and to outline the plan of organization necessary to make it efficient in railway practice.

That his efforts have been successful is indicated by the fact that practically every railroad of importance on the Western Hemisphere has adopted or is contemplating the adoption of similar methods for the conservation of the lives and limbs of their employes.

I might quote to you a great many of Mr. Richard's epigrammatic effusions which have had such an influence in this humanitarian movement but will quote but a few.

"It takes less time to *avoid* an accident than it does to report it."

Once you can get a railroad man to appreciate this statement the effect is instantaneously and generally permanently beneficial to himself as well as his fellow employes.

"Remember it is better to cause a *delay* than to cause an accident."

This sensible remark, properly and frequently uttered appeals to employes in general and is recognized as fundamental by the employes generally although years ago the reverse was the general slogan.

"Better be careful than crippled."

A remark of this nature at the right time or better yet the general distribution in conspicuous places of placards containing this text has without doubt caused many an employe to eliminate chances that might result in an injury.

"Remember that 12 out of every 13 employes killed and 33 out of 34 injured are in little accidents, not in collisions or derailments, so try to prevent the little accidents."

This is true, and if we can induce our employes to stop a moment and reflect upon the statement they are convinced and consequently more concerned about the minor accidents than the major ones such as collisions and derailments.

Train accidents are both avoidable and unavoidable and in addition are classified as major and minor.

Accidents to trainmen, which includes enginemen and yardmen have always been given more attention by the general public than those occurring to employes in other departments, principally by reason of the greater publicity given them in the daily press.

The deaths and injuries to employes in train service in connection with what we term collisions and derailments are a small percentage of the total.

The causes of collisions and derailments are varied and include carelessness, indifference and forgetfulness.

The larger portion of accidents occurring to men in train service are due to a variety of causes and include in addition to carelessness and indifference on the part of the injured party, contributory negligence on the part of fellow employes, manifested in various ways.

It is ordinarily an easy matter to locate definitely the responsibility for a collision.

Derailments, however occur from such a variety of causes that it would be futile to attempt an enumeration.

In our safety work we have given especial attention to remedying the various dangerous conditions and practices which have a tendency to produce death or injuries to our train employes.

Careless habits we endeavor to correct and in event moral suasion is ineffective we resort to severest discipline.

We hope our employes in train service generally appreciate our efforts to weed out the inefficient, careless and unadapted employes, and as time goes on, we hope to secure a closer co-operation on the part of our men in our efforts to eliminate the employe who has no fear for his own safety and no regard for the safety of others.

"Safety First" is becoming the watchword.

While, as we have stated, the percentage of injuries to employes in train service due to collisions and derailments or as we designate them train accidents, is very low, we must not overlook the fact that in such accidents we usually have another factor to consider, viz., the general public, our patron.

We have not, in our safety work, made any effort to feature prominently the accidents occurring to passengers and patrons, believing that the elimination of the causes producing injuries

to our employes would bring about such care in train operation as would practically eliminate injuries to our patrons—further we have felt that by making the employe feel that our efforts are for his individual benefit we would be able to secure a closer and more lasting co-operation on his part.

The results attained indicate that our analysis has been correct as is shown by tabulation of casualties occuring during the 19 months ending July 1st, 1912, compared with those occurring during the previous 19-month period, indicating a decrease of 27.8 per cent in the number of persons killed and 31.2 per cent in the number injured on the C. & N. W. Railway system, not including C. St. P. M. & O. Lines: during the same period the number of trainmen killed was reduced by 55 per cent and of injured by 44.1 per cent.

In switching service there was a decrease in 42.3 per cent in the number killed and 20.9 per cent in the number injured.

Among employes in station service, including a variety of employments we show a decrease of 57.1 per cent in the number killed and of 16 per cent in the number injured.

In the track department, involving a large number of foreigners of an exceedingly low grade of intelligence, we show a decrease of 5.1 per cent in the number killed and of 39 per cent in the number injured.

Passengers killed decreased 33.3 per cent and injured 18.2 per cent.

Trespassers killed decreased 25 per cent and injured 17.1 per cent.

This showing, bear in mind, has been made in the face of a constantly increasing percentage from year to year previous to the organization and efforts for safety.

From the bulletin issued by the Interstate Commerce Commission covering railway accidents during the year ending June 30, 1911, which is the last bulletin issued covering a yearly period, we note that during that period there were 489 trainmen killed and 5,038 injured in train accidents involving collisions, derailments, other accidents to trains and cars and in connection with bursting of or defects in locomotive boilers or boiler attachments.

Assuming that each and every railroad in the United States assisted by its employes, should have been able during the year ending

June 30th, 1911, to have made such a reduction in deaths and injuries to trainmen as was made by the railway we represent during the 19 months ending June 30th, 1912, viz. 55 per cent and 44.1 per cent injured, there would have been in these United States 296 less funerals with their attendant and subsequent horrors and hardships and 2,221 less occasions to call in the services of the surgeon. 269 less widows left, in many cases with children or aged dependent parents, and approximately 11,105 less persons adversely affected either financially or otherwise by reason of the disturbance of the usual equilibrium due to relations borne by those injured to their families and the community.

Another feature which might be prominently mentioned in this connection is that during the period referred to the railways were obliged to employ 5,527 inexperienced men, most of them temporarily, however, to replace those killed and injured.

The addition of new or inexperienced employes always increases the danger of accident to the balance of the employes to a very considerable extent in addition to lowering the efficiency of the organization as a whole.

To this body of Electrical Engineers we appeal for assistance in the humanitarian movement of conserving human life.

Your members have done much individually to bring about the elimination of accidents by the designing and installing of various electrical devices some of which are not only wonderful, but are actually indispensable in modern railway operations.

You have a fertile field and the crops should be bumpers, but like the average farm, your fields need more intensive cultivation.

Railways are waiting for an automatic train control which is fool proof and practical, and which will effectually prevent careless, reckless, indifferent or incompetent engineers from running into a zone of danger.

There is, of course, and as usual in connection with all radical and important improvements, such as an automatic train stop, a very considerable difference of opinion, among those having the responsibility for train operation, as to the wisdom of any further effort to reduce responsibility of the individual employe by substituting automatic devices which are dependent for their efficiency upon painstaking and efficient maintenance.

There is ample ground for argument both pro and con in this connection.

On one hand we are confronted with the argument that the installation of automatic safety devices has a tendency to relieve our train and enginemen from responsibility they are now assuming and which it is claimed they should continue to assume rather than to place these responsibilities upon mechanical devices which might be efficient or the reverse depending in a large measure upon proper maintenance by a force paid much less wages than our train and enginemen receive: that the installation of automatic train stops will merely pass the responsibility on from a highly paid and long tried employe to one of less experience and less pay; that the transference of some of the responsibilities of an engineman to a mechanical device and to the maintainers in charge tends toward a certain decrease in efficiency on the part of highly paid and supposedly alert and experienced employes: that in connection with the use of the suggested device it will not be possible, through surprise tests and other methods now employed, to maintain proper observances of our present signal devices.

All of these arguments are more or less pertinent and in some respects temporarily convincing.

On the other hand and viewing the situation from the angle disclosing the absolute necessity for protecting the lives and limbs of our train and enginemen, as well as the lives and property of our patrons, we are face to face with a condition which must be met and the problems solved in a manner that will satisfy our patrons and permit us to sleep with clear consciences.

With automatic train stop devices that are so constructed as to produce stoppage not only when danger is imminent but whenever the mechanism is out of order as well, as is provided in connection with automatic block signals, i. e. showing a stop indication not only when block in advance is occupied but when mechanism is not working properly and under no circumstances a "false clear" in-indication, we believe it will be as easy, by surprise tests and the various other expedients necessarily resorted to at present in connection with block signals, to retain that sense of personal responsibility on the part of our employes which is considered so necessary.

It is certain that, if by mechanical and electrical devices a reasonable percentage due to negligent, indifferent or reckless employes, can be eliminated, our duty is clear and it is also apparent that unless railway managers encourage activity along the lines of reduc-

ing train accidents by trying out all new devices promising results and by adopting those found to be practical, public opinion, which is all powerful when concentrated and directed, will call for and be granted a new deal and in connection with which parsimonious or short sighted managements will be relegated to the discard.

We also need a further extension of your efforts in the field of train dispatching.

As a train dispatcher of many years' experience I have dreamed for years of a railway line equipped with signals under the direct control of the dispatcher so arranged that trains of whatever class may be handled by signals alone, eliminating the cumbersome, delay producing, train order entirely.

You are welcome to the idea and I am sure that men of your knowledge and experience in matters electrical can design the necessary installation. One thing to bear in mind, however, is that the installation must be both simple and reasonably cheap.

The dispatcher must know by return indication or otherwise that when he desires a given signal in a given position and presses the button for that purpose there will be no doubt as to the results.

Under such an installation much of the present-day installation in the way of block signals, train order signals and telegraph operators may be dispensed with and the dispatcher may be depended upon to keep his trains properly spaced.

We have mentioned but two railway necessities for you to work on. There are, as you are aware, many others, but the problem of reducing casualties in railway operation will receive a great impetus when, as is sure to occur, the perfection of the devices mentioned is accomplished.

The human race is affected with speed mania. Whatever causes may have operated to produce this condition are not pertinent now. What we must do is to throw around the traveling public such safeguards as will preserve their lives and limbs until the disease runs its course.

This disease is reflected in the train schedules, both passenger and freight, but more especially in passenger service.

A mere glance at a schedule does not indicate at what speed a local train must be run between stations to enable it to reach the next station, do the work and leave on scheduled time.

Many local passenger trains make faster time between stations than through trains making few or no stops.

Double tracking decreases the risks some, but not by 50 per cent as some might think.

Additional tracks with the necessity for intermovements produce additional chances for accidents which must be protected.

High and low speed passenger traffic with high and low speed freight traffice performed on the same track, even on a double tracked line, presents problems in the way of protection that are difficult in solution.

To the electrical engineers we are greatly indebted for the prompt manner in which you have responded to our call for assistance in providing this protection. Ours is the task of educating the employe to so regard these precautions as to avoid accidents and injuries.

The field is large and the laborers are few, but the reward is ample and we therefore request your co-operation in this crusade for the betterment of mankind.

DISCUSSION

Mr. E. F. Potter: Assistant to General Manager, "Soo Line." Mr. Braden has so thoroughly covered this matter it seems to me there isn't very much I can say. Like a former speaker I feel some of these gentlemen have stolen the thunder I expected to use, but it occurred to me when Mr. Richards asked me to discuss this paper that I have had long years with the trainmen. I have met their general committee, I have met their grievance committee, I have met their widows and their orphans, and their fathers and their mothers, and I thought, as he spoke of the long stream that has passed through his room, of those who had been bereft by the death of some member of their family or by injury, I could see them in my mind's eye, painted there, those women with the black veil, those crying babies. Is there anything we can do to stop it? Now, gentlemen, there occurred to me the other thing: "Am I my brother's keeper?" It has been said by the Great One that we are. Therefore, what shall we do to take care of these men?

My province is especially the trainmen, as assigned by the chairman. In the first place, we shan't admit them to the ranks until we know they are morally, mentally and physically right, be-

cause the minute we get them in we assume a responsibility for them. They shall come in as novices and serve an apprenticeship, and we shall determine whether we have bought a square stick that we want to fit into a round hole, and if we have, let us get rid of it. It doesn't argue anything against the individual. He may be a beautiful musician, he may be a beautiful painter, but unfortunately a poor trainman. We don't want him, and let us get rid of him and give him a chance in life, and not keep him four or five years to discover he is the wrong man. Therefore, we want to be very careful whom we admit. As we diminish these accidents, with no disrespect to the men now in the ranks, we are going to get a better class of men. Why? Because we are paying better wages than the average man earns. The thing that deters men from going into this is the very fact there is a certain amount of danger in it. Has been in the past. Now, we can eliminate it. We have only to refer to what the North Western Road has done as read by Mr. Braden. They will go on with the good work, and I am sorry to say we have not undertaken it yet. We have been busy with other things. We are a young line, but it will come, Mr. Chairman, it will come just as sure for every road in the country.

There is another thing: If you can persuade the men and show the men that it is to their advantage—and you can—there is no trouble about it, they are going to join with you. I have the greatest amount of faith in the righteousness and the honesty of humanity, as a class. In the investigation of these accidents there are two or three things we want to bear in mind. In the first place, you want to teach the men that the truth will always help them. If they will tell you the truth, you will do almost anything to protect them, but if they tell you a lie, it doesn't make any difference how trivial it is, you will remove them at once from the service. The men repairing the track want to put just a little of themselves into the repairs, the men repairing the cars want to put just a little of themselves into it. They want to remember all the time it is not a job they are doing to get rid of in a hurry. Some man's life, mayhap their own, may depend upon the honesty with which they do that work. If you can only persuade men, if you can only show them, the majority of humanity will go with you. I know that is true. I have dealt with men for thirty years, and I have great faith. Once in awhile you will find a crooked stick, once in awhile you will find one that

will try to fool you in some way, but the majority will go along.

Then another thing: In administering discipline, it does not make any difference who your man is, absolutely disregard his personality and administer your discipline fairly, squarely, honestly. Treat all men alike. One man that runs through a switch gets five demerit marks by one superintendent, and another man gets ten demerit marks for exactly the same thing. That is not fair. If necessary, have a board who will pass on all these things before they are administered. Treat them all exactly alike. Train them with a military discipline absolutely, for their own good, and for the good of all the rest of them. They won't object to it after awhile when they get accustomed to it. When a train stops, the flagman is on the ground, he is so many feet behind. He is not going to go back to hunt up his overshoes or his cap. He has them, he is there; every time the train stops. He goes back intuitively. By and by he always does it. Why, I can recall conductors you don't have to watch. They are disciplinarians and their men are always acting in that manner.

From the point of the officer, never pass over the slightest infraction of a rule, not one, without observation and without saying something to the man. Never. Because if you do, the next time he will do it again and perhaps there will be trouble. Never let anything go. Not to be mean about it, that is not necessary, but simply require an absolute discipline. Look at the army. What is the man at the rear of the train, the flagman, but a picket; that is what he is. What does the United States Government, or any other Government, do with the man they put out on picket duty if he fails? In time of peace he is put in the guard-house, in time of war he is shot. Well, it is time of war on the railroad all the time. You never can tell.

I have told a story, and I am going to presume upon this audience to tell it again, Mr. Chairman, because it thoroughly illustrates the necessity of a man always being cautious. Some years ago just before I went with the North Western Road I was down in Illinois for what is now a part of the Baltimore and Ohio,—it was pouring rain—I, with several other young fellows had been in town about half past ten o'clock, and we wanted to go back to camp, a distance of 2 miles. I said to the station agent: "Are there any trains on the road?" He asked the dispatcher, and he said there was not a

thing on the road, and we started to walk. We came to a cut and the water was pouring down as it only can pour down in Illinois, and I became just a little frightened. We went out to the side and through the ditch and up, and we had not any more than got there when an engine shot by without any headlight. Well, I called them down the next day for that. The dispatcher was right, the operator was right. That engine had been distributing cars, and presumably had tied up. It was eleven o'clock. The engineer discovered he was short of water and came over to the next station to get some. I think if he had opened the tank he would have got all he wanted the way it came in on me, but he came over there. He was clearly within his rights. He had a right to use that track. That is but an illustration of the fact that it is always necessary for a man to flag. Now, flagging isn't all there is to railroads, there are a whole lot of other things.

You want absolute obedience to the rules. If the rules are wrong, take them out of the book, but have intelligent obedience to the rules. Some of the gentlemen have spoken about the sixteen hour law. Awhile ago I had an accident on the road and made some inquiry and found the man had had the usual amount of rest, and I asked what was the trouble. He had gone to sleep on the engine. He had been playing poker all the night before. The law did not cover that, but I did (laughter). I said: "It is all right, boys, I have no objection to the law, somehow or other we pull back when they tell us to be good, always, it goes against the grain, but after some fellow enacts a law and we feel it is right I am going to have that law executed in spirit as well as in letter, "and the spirit of the law was that he should have rest. Playing poker isn't rest. gentlemen. A lot of you know that (laughter).

There is another thing: Some of the gentlemen have mentioned the question of liquor. I have never said very much about that, not a great deal, but I will tell you one thing, gentlemen, I won't go into a barroom and drink, not very often (laughter). But I am honest about that, I am not going to say to trainmen: "You must not go around a barroom and you must do this and that and the other," and then you, the officers, do that very thing which you have prohibited the trainmen from doing. There may be a difference, but after all the young brakeman sees you doing that and he thinks

that is the thing to do. that man is general manager, he is the superintendent, and he does it, and I might as well do it. You might stop at one drink, but he might take six beers. I say we should set them an example. I am not here preaching temperance, but I mean we should set then an example of temperance in the broadest sense of the word, and we should be absolutely just, absolutely just.

Mr. Braden has spoken of the electrical devices. That is good, and I hope we will get more of them, but there will be lines that cannot afford them, pieces of lines that cannot afford them, and you will have still the personal element, the human element in there, and it doesn't make any difference whether it is repairing the electrical apparatus or running an engine, still the human element, still the requirement for great honesty on the part of the men is present, and let us be honest with them and let them be honest with us, and if we are honest, absolutely fair all the time, treating one man just the same as another in the ranks, then we can expect them to reciprocate and they will stay with you every time. I have great faith in the trainmen of this country. (Applause.)

Mr. J. WALTER COON: General Safety Committee: Baltimore & Ohio Railroad: Mr. Chairman, Ladies and Gentlemen: Being the last speaker you will wonder what I have to say or what new thought I have. The ground has been plowed and harrowed, and there really isn't anything new to say, but in this safety work it is altogether a question of hammering, keeping it before your people all the time, not as some one, in a slang way, said last night: "Hit a nail with a sponge no matter how much you soak it it won't bring results; in safety work you have to keep hammering right from the shoulder.

Some one has also said "You have stolen all my thunder." Well, where do you suppose the last speaker is? Almost everything I had jotted down in my mind or on paper has been thoroughly covered, so I will just briefly, without loss of time in preliminaries, make a short review in order to keep it before you. That is all we can do.

In opening the discussion of Mr. Braden's paper on "What can be done and what has been done to prevent accidents to trainmen" one could not fail to endorse his views in general, and my point will be, without loss of time in preliminaries, to specialize on but one or two points and confine my remarks to "What can or should be done to prevent."

Mr. Braden speaks of conservation of materials. All roads maintain a testing department. The rails are tested in every possible manner to insure maximum strength. Draft gears are subjected to most severe drop tests, service tests etc., to see that the strongest is selected, and so on with all material used by a railroad, but do we apply equally as severe tests to the new men coming into the service. One mistake of a careless employe can render the material test practically worthless. A young man to become a doctor must have spent several years in school; then put in at least four years at medical college; then pass a rigid examination before he can practise. Why? For fear his lack of training might injure someone. Even after all the study his practice grows slowly, for people prefer a man who has had several years' experience. The conductor or engineer as a rule makes more money than the average physician collects, yet railroads will take a green boy, often with very little education, give him a book of rules to study, compel him to make a few trips over the division to familiarize himself with the stations, sidings, etc., and he is then considered a railroad man, his future training being left largely in the hands of whatever crew he happens to be with; if with a careful crew the chances are he will become, in time, a good railroader, but if the opposite he becomes inefficient and careless for we are quick to pattern after those with whom we constantly associate.

As Mr. Braden states "We have ample rules"; therefore, the first essential is to get the very best men available, see that his preliminary instruction is as thorough as possible, see that he clearly understands the rules, impressing upon him that Safety underlies them all and then constantly educate and a very important part of this education is to create enthusiasm and the fearless shouldering of responsibility and the absolute observance of the rules under all circumstances. Train him as a soldier is trained to implicitly obey the rules of the company so that the observance of them will be almost second nature. If the rules are bad or impracticable their strict enforcement will bring about their change, but as long as they are in effect they should be absolutely lived up to.

Mr. Braden states that the real cause of most accidents is traceable to failure of some employe to do his full duty. Let me illustrate. A head end collision occurred within the last thirty days on a cer-

tain railroad. A freight train with two engines overlooked a regularly scheduled passenger train which was on time. All eight employes on the freight train were experienced men. What happened? The engineer on the loading engine frankly admitted he overlooked the passenger train and all other seven members of the crew were depending absolutely on him. The rules require that each member of the crew must be familar with the train orders upon which they are running. The conductor read the order but depended on the engineer and failed to read it to his flagman and brakeman as the rules require and it was brought out in the investigation that this was often done. The brakeman, on the other hand, read them if they were handed to them but not if they did not ask for thm. The fireman was busy shovelling down coal and did not read the orders. The engineer on the second engine claimed he read the order wrong. In other words as stated every member of the crew depended on one man and that man, as Mr. Braden states, failed to do his full duty. If anyone of the seven had lived up to the rules and read the order and kept his mind on it the accident would have been avoided and two lives saved. The division officers should have discovered that crews were not being kept posted and that is part of the education I mention which will be touched on more in detail. The local officer should have gotten on trains at various stations along the line and asked the brakeman or fireman under what orders he was running. If, by the Safety work, we can get our men to turn squarely around on this question and say "Well I guess its useless but will take the precaution for the fellow following me might be asleep, running too fast, etc." instead of saying "Well, I guess he knows what he is doing, etc." we have accomplished much.

The reading public judges the railroads very largely by the number of times it sees articles in the paper of train accidents, but as Mr. Braden states that is not where the majority of employes are killed. We analyzed this carefully and out of 107 employs killed in the past nine months on the Baltimore & Ohio but 19 or 18 per cent were killed in train accidents, and 17 of the 19 were in accidents chargeable to the failure of the human element. Ninety per cent of our employes are killed by causes the company by the expenditure of any amount of money could not prevent. Is it not, therefore, self-evident that the instilling of more care ino the minds of the

employes is the only solution. We have a rule requiring employes to step clear of all running tracks to let trains pass, yet 14 in the nine months were killed in that manner. Twenty-six were killed by walking or working on tracks and not maintaining proper lookout. Five attempted to run across ahead of trains that they saw coming. Two under car eating lunch. (Two killed a few days ago by sleeping under camp cars which camp cars were moved about a foot.) The only way these accidents can be reduced or eliminated is by constant education and creating, unconsciously, more care. Familiarity with danger breeds contempt. We must instill a constant fear of danger to the extent of maintaining constant watchfulness. To do this the cause of your personal injuries should be placed before the men clearly and your train accidents carefully analyzed and the causes given the employes for their guidance by bulletin, magazine or some other form.

We now come to the final point. How can satisfactory results be brought about? We must first realize and get the employes to realize the seriousness of it all. Your mother and my mother, your wife and children and my wife and children are in the hands, when traveling of the railroad employes. Their lives are the most precious things we have. Can we make the test too severe or too exacting? There is but one answer—No. We should carry on the educational work mentioned systematically and one of the best methods to determine how it is "sinking in" is the observation tests, oftentimes improperly called Surprise tests. These tests are made by officers to see if the rules are being obeyed. A fuse is put down and the man is watched to see how it is observed. A train order is incorrectly repeated to see if operators or dispatchers are alert. There is no surprise about it. They are simply observation tests. In one of our general Safety meetings an employe suggested that to be fair all employes be notified that during a certain period certain kinds of tests would be made. Is this not about as wise as for a burglar to notify a certain block in a city that one house in the block would be robbed during the coming week? These tests should be systematically carried on and followed up. When an engineer runs by a signal he should be tested soon after in some other way. If he continues to fail in these tests he is not the man for train service. Careful record should be kept of all failures and the man followed up and the careless or inefficient one made careful or efficient or put in some service where mistake will not endanger life.

Periodical color and hearing tests should be made as well as sight. When we first commenced to be exacting along these lines I attended the examination of one of our oldest engineers who had failed in color examination and was up for re-examination as he felt he had been unjustly dealt with. A red signal, the same as appear on a semaphore signal was flashed before him and he called it green yet he was running a fast passenger train. Inquiring as to how he had kept out of trouble during the past twenty years, he replied: "If John (his fireman) was here he could tell the color." He admitted his fireman called the colors to him. In daylight he could, of course, tell by the position of the arm.

In closing the point I wish to drive home in preventing accidents is get the right man, apply the acid test, but when you do get him do not let him get away from your service. Next educate him thoroughly and constantly, then carry on, systematically, observation tests to see that he is profiting by the training; in other words, make the railroad position second to none and as Mr. Richards said, in one of his little talks, when the railroad man gets up above, as he should, St. Peter will say, "Come right up front you have been a good and faithful servant." (Applause.)

The Chairman: I have asked Mr. H. W. Belknap, the Chief Inspecter of Safety Appliances for the Interstate Commerce Commission, to say a few words.

Mr. H. W. Belknap: Mr. Chairman (applause) and Gentlemen: I wish to assure you that this has been one of the most pleasant, profitable afternoons of my life. I never listened to papers that carried with them more depth of thought than have the papers that have been read here to-day.

We are much intersted at Washington in this work. I have been placed in charge by the Interstate Commerce Commission of its safety appliance work, and, as Mr. Braden has so aptly said in his paper, probably the best legislation ever enacted and arranged for has been during the last two years. The law known as the Standardization Law, which fixes definitely the different appliances on cars and engines, and fixes a standard that every railroad in the United States and Canada can comply with and build to, brings around a system of uniformity that is so much desired when cars are interchanged all over the country. That is one of the laws.

We are investigating accidents under the Accident Investigating Law, and in dealing with that question the entire object is to get at the true facts of accidents and find out what their causes are, and we found, as stated in the paper that I read for Mr. McChord here yesterday, that the majority of these accidents are caused unfortunately, by human error, and the question we have to meet is: How are we going to deal with this question? It is the burning question. You have to get the man so he will think right if you expect him to act right. How are we going to do this? That is the safety problem. That is the one thing to do. Whether it is to be fixed by better rules, better operating conditions, better methods of discipline, or how, is a question that is going to take thought and study, and when it is finally settled I think it will be settled for the benefit of all our railroads and for the employes and for the traveling public.

I am sorry that all of our inspectors could not be here. I hope to be able to get copies of this record so I may give it to them. We have two of our men here. We have all told, thirty-one safety appliance inspectors and six hours of service inspectors. They come from the ranks of the workers. They are men who have been air-brake inspectors, conductors, brakemen, and so on, in different branches of railroad service, so we know how to go about it when we go to investigate an accident, and we have received hearty and willing co-operation from every railroad wherever we have gone, because the railroads themselves are as interested in this problem as anybody, and we are glad of this, we are thankful for the co-operation, and we are glad we are able to do much with the limited service at our disposal, and I am only hoping that this safety movement will continue to grow and grow.

I made a little address to a body of Baltimore & Ohio employes at Drexel Institute, and I pictured to them that this, in my mind, was the greatest movement for the conservation of railroad employes that had ever started, and that the only way it was going to be successful was, as Mr. Coon has aptly stated, keep hammering, keep talking about it. There have been too many spasmodic safety movements after a big wreck when we say: "We are going to have safety now." Safety must be of prime importance and continue if you are going to make it successful. Get the man so he will think right and he will act right, and I am sure all your efforts will be crowned with success. (Applause.)

Mr. George W. Dailey was introduced by the Chairman as the superintendent of the division of the North Western Road that has the most congested traffic of any on the system, and has the banner for the best record for safety in work and travel.

Mr. George W. Dailey: Mr. Chairman and Gentlemen: Speaking of surprise tests, this is one on me. I did not expect to be called upon to say anything and really do not know just where to start.

There is one thing that is impressed on my mind, and that is that the safety movement, in my opinion, is one of the most important, one of the most far-reaching undertakings, we have entered upon. It was a new thing, and it was something that had to be impressed upon our men, and I am glad to say that I believe it has been impressed very well, very thoroughly, and I am also glad to say that our men have certainly done their part. The reason our division won the banner was because our men appreciated the importance of the work, and usually, as Mr. Belknap has said, when they think right, they act right. They thought right about this safety movement, and they have acted right. Our division is a very heavy one. We average about four hundred and fifty train movements a day. That means twelve or thirteen thousand a month on the entire division. We have gone through the last year without any serious trouble. We have made a very good record in the matter of safety, and it is largely due to the interest taken in the matter by our men. They appreciate the fact that it is a help to them directly. They appreciate the various benefits that they derive from it. They also appreciate the fact that it helps the company, and our men generally are willing to help the company. The movement is far-reaching. It has an effect on our railroad in many ways. We find that safe operation generally means efficient operation and largely economical operation. We find that a great many matters acted upon in our divisional meetings and by the Central Safety Committee, finally develop into better and more efficient operating conditions as well as safer conditions. One of the principal factors in this movement is to maintain interest, stimulate interest and maintain it, and in the eighteen months or two years that this movement has been going on, as far as our division is concerned, I do not see any cessation of interest nor do I see any lack of effort. They are just as enthusiastic,

just as hardworking, now as they were when they started, and of course it is largely due to the fact that the committee keeps hammering away at everybody and keeps constantly asking for suggestions, and we keep the matter alive. It is like anything else, if you will keep hammering away on it, keep working on it, you will always accomplish something. If you let up on it, and especially the men designated to perform anything, the officers, the safety members, if they let up in their efforts, they naturally will have to expect that the men will let up also.

Two points in Mr. Braden's paper struck me as worthy of a great deal of consideration. One is the things we should expect in the future, especially automatic control. It seems to me those things are more of a necessity now than they used to be. On a large territory like mine, that is, a heavy territory where we have so many men, we are constantly injecting into the service a large number of new men, and therein, of course is an element of danger until they can be properly trained. I am not quite prepared to say much about the automatic stop, but I believe it is a good thing.

As to the other point he mentioned, the selection of men and the education of men, it seems to me that therein lies our next important step and the next move that should be made. I was impressed this afternoon—a gentleman on the train with me, passing the Naval Station south of Waukegan, made some remark that led to a conversation. I had a conversation with one of the officers there a couple of weeks ago, and I was impressed with the fact that they were very careful, very persistent, in their training of those young men, and the thought struck me that when they got through with a young fell w he hardly knew how to do anything wrong. They took him, started right in with him when he was green. They taught him just the exact way in which he had to do everything. They kept at it, and he did the same thing every day. They lined him up and made him do it every day until in the course of three or four months if he was directed to do something he did not know how to do it other than the way in which he was taught, and he was taught to do it properly and promptly. It seems to me we must do these things with our young men that are constantly coming into service. Start them right and teach them right, and then they will do right, as Mr. Belknap said.

We are coming to the time when railroads will have a bureau of

employment and instruction, where young men will be taken awhile, have a large room probably fixed up with actual switches and actual signals where they can see them and see what they mean, and when they give a certain indication they will be told what that means. They will be directed and taught in a practical manner, and thoroughly examined on rules, told what each rule means, and it will be worked out in front of them. This is probably one of the next moves that the Central Safety Committees will make, the better selection and better teaching and instruction.

I could say a whole lot about the banner and tell you we are all proud of it, which we certainly are, and especially I am, but it is getting late and you have a lot of good speakers ahead of me, so I want to thank you for your attention. (Applause.)

Mr. Chairman: The following is to be incorporated in the minutes of our session.

During the Transportation Session of the Co-operative Safety Congress, at Milwaukee, Wisconsin, Wednesday, October 2nd, 1912, the following resolution was introduced by A. Hunter Boyd, Jr., Chairman, General Safety Committee of the Baltimore & Ohio Railroad, duly seconded and unanimously adopted:

RESOLVED, That the members of the Transportation Session extend their hearty and sincere thanks and appreciation to the ASSOCIATION OF IRON & STEEL ELECTRICAL ENGINEERS for the initiative which they have taken in calling together The *First Co-operative Safety Congress* held in the United States, and for their effort to make the same successful.

I want to again express to you my thanks and appreciation for your attendance. We have been very much instructed and very greatly entertained by the addresses and the papers that we have heard to-day. We want to remember, we safety men and safety women, that when we get the women interested in this movement it will go like wildfire; we want their help, and if the railroad men's wives and sisters and their mothers could only know the dangerous and risky things that their husbands and brothers and sons are doing every day about the cars and engines and in the shop, there would be such a jar, such a call down, that accidents would be stopped. When we leave here to-night to go to our respective

homes if we take with us a little more enthusiasm than we had for the "Safety First" movement when we came, if we will go to our homes with our minds made up that at least every month we are going to get one more man interested in "safety first" until we get every man on every road in America interested in it, we will accomplish what we have started out to do. Remember, gentlemen, what the poet said, that all great movements, in the annals of the world are the triumph of enthusiasm, and be enthusiastic safety men.

I thank you, and we will call the meeting adjourned.

Adjourned until Thursday, October 3, 1912, at ten o'clock A. M.

MANUFACTURERS SESSION

Chairman: JOHN KIRBY, JR., President, National Association of Manufacturers.

"Opening Address,"
JOHN KIRBY, JR.

"The Michigan Employers' Factory Inspection Plan,"
JOHN TRIX, President, American Injector Co., Detroit, Michigan.

"The Economic Value of Industrial Safety,"
M. W. ALEXANDER, General Electric Company, Lynn, Massachusetts.

"Training the Apprentice,"
H. E. MILES, Racine-Sattley Co., Racine, Wisconsin.

"Practical Shop Safety,"
J. PHILIP BIRD, General Manager, National Association of Manufacturers, New York.

"Education in Accident Prevention,"
M. W. MIX, President, Dodge Manufacturing Company, Mishawaka, Indiana.

"The Industrial Betterment Special,"
D. M. PERRY, Former President of the National Association of Manufacturers, Indianapolis, Indiana.

"Accident Prevention in Foundry and Machine Shop,"
FRANK MCKEE, Safety Inspector, Fairbanks-Morse Co., Beloit, Wisconsin.

"Safety Methods in the Western Lumber Industry,"
HART W. PALMER, General Superintendent, St. Paul and Tacoma Lumber Co., Tacoma, Washington.

MANUFACTURERS SESSION

Presiding Officer: JOHN KIRBY, JR., President, National Association of Manufacturers

The Chairman: Gentlemen, it affords me great pleasure to be invited to preside at this meeting of the Manufacturers Session of this Safety Congress. The question of safety is one in which we are all very much interested, and we who are at the front line, the front rank, expect the manufacturers of this country to become still more interested as time goes on. This question of safety is one of very grave importance to us, especially in view of the Workingman's Compensation Laws we find all over the country. That is one standpoint, but not the only standpoint. We have fads and fancies of all kinds which the people run to, and take to, and pay attention to, take a great deal of interest in, and now we want in this country a stir-up, a fad, if you may call it so, to get the employers and employes so interested and get that fad so impressed upon their minds that they won't think so much about baseball and golf, politics and other things, but will be paying their attention, devoting their minds, to the question of preventing accidents, and when that time comes, we expect to reduce accidents and the loss of human life through accidents to a minimum. That they can be reduced 50 per cent is a very reasonable estimate.

I want to say right here that at half past ten the boys from the Milwaukee Trade School, seventy-five in number, are to be here, and will occupy seats at the rear of the room, remaining until twelve, when they will have to depart, but our meeting will go right along until it reaches a conclusion.

I have a notice which I am requested to read. On Friday morning, between eight and ten o'clock, in the Red Room on the Seventh Floor, there will be an experience Meeting of safety men. This meeting will be informal, no speeches or set papers. Every man present will be given a chance to state his troubles and ask suggestions with regard to how to remedy them. Any man having in mind a suggestion which he thinks will be of value to the other members will be allowed to speak from three to five minutes. Every safety man is cordially invited to attend this meeting.

I have a few remarks that I have prepared:

OPENING ADDRESS

By J. Kirby, Jr., President National Association of Manufacturers

I feel that the manufacturers of this country, who are in the very nature of the case large employers of labor, have both a deep interest and a heavy responsibility with regard to the topic of accident prevention.

The movement for the prevention of accidents, that is now sweeping the country, is a notable crusade for the reduction of human suffering and a necessary campaign for the elimination of a great economic waste.

Once more we have taken a leaf from the European book of experience, for it is a well-known fact that the Old World has become new through its methods of promoting efficiency and preventing waste, while the New World has grown old through neglect of them.

We have been a prodigal nation—wasteful alike of national bounty and of human resources. The dawn of a new era in conservation is at hand. It must herald the approach of a regenerating light that shall permeate our entire national life.

We must make an end of industrial bloodshed. We must awaken the people to the necessity of accident prevention and inform them as to the proper safeguards. The prime causes of accidents are ignorance of conditions and carelessness. The great majority of accidents are preventable.

It is the workman and his family that are chiefly to be considered in this whole matter, for no amount of money will outweigh in value a single human life.

But it is nevertheless important to point out the burden upon the nation which these constant disasters entail, for this is a factor which very appreciably affects living conditions for all.

A conservative estimate of the economic loss, in this country, through industrial accidents, places it at more than a quarter of a billion of dollars each year.

This is more than two million workmen could earn in a twelve-month at four dollars a day apiece.

With the universal adoption of a well developed policy looking to the prevention of industrial accidents it is easy to believe that 50 per cent of them might be avoided.

This would mean a saving in the United States, each year, of about twenty thousand lives; the prevention, each year, of a full million of bodily injuries of varying degree; and the money saving of $125,000,000, annually.

We can see the possibilities of accident prevention when we note that the Pennsylvania Railroad in ten months decreased the serious injuries of its 33,242 shop employes over 63 per cent, by the installation of safety devices and the instruction of the workmen in exercising due caution.

As the result of its "safety campaign" the U. S. Steel Corporation has reduced serious and fatal accidents in its various plants by 43.2 per cent since 1906. (The normal pay-roll number is 200,000.) Each year 2,300 men escape, who would have been injured under previous conditions.

The principal factors which tend to improve conditions as to safety are: The installation of mechanical protective devices, proper inspection and superintendence, improving the bodily health and the conditions under which work is done, and the instruction of the worker himself.

The workman's part in the prevention of accidents is exceedingly important. The golden rule of the new American system of railroading is: "It is better to cause a delay than to cause an accident."

The golden motto of the modern industrial policy of accident prevention is: "Get rid of the careless habit; acquire the *safety habit.* It is better to be careful than crippled."

For effective accident prevention it pays to look after the little things. The statistics show that it is not the big calamities, those which get into the newspapers of the entire country, but the isolated cases, that have the largest influence upon the totals.

More men are killed by falling of ladders, scaffoldings, etc., than in any other way. More accidents happen on the farms, in proportion to the population than in the factories.

The officials of the Chicago and Northwestern Railroad found that the "big" or train accidents, such as collisions and derailments, did not have a large influence, relatively, upon the entire number of casualties. Only one of each 13 men that were killed and only one of each 34 men that were injured was the victim of a "big" accident, the others were killed or injured in the lesser or isolated accidents.

It is the duty of every employer to establish suitable working conditions for his employes, and to provide the requisite safety devices, to insist upon proper inspection, and to do everything within his power for the development of the "safety habit" among his employes.

The "safety committees" which have been appointed in a large number of corporations within the past few years are doing much valuable work along prevention lines.

If every head of an industrial concern or an industrial department will ask himself frequently, "What can I do to further safeguard the lives and limbs of the workers under my direction?" and will earnestly seek the solution of the problem, we shall have a wonderful improvement in safety conditions.

For while industrial education must begin at the bottom, or with the apprentice, accident prevention may begin at both ends—in the domain of the employer and in that of the workman as well. And I do not doubt but that that initiative and enterprise which has made American industrial development the marvel of the world, will stand us in good stead while we are attempting to solve this perplexing problem of accident prevention.

The National Association of Manufacturers has taken a great deal of interest in the subject of accident prevention, both collectively and individually through its members. For three years it has had a Committee for Accident Prevention and Workmen's Compensation.

The Association has published a very thorough report, "Accident Prevention and Relief," by Mr. F. C. Schwedtman, Chairman of the Commission and Mr. James A. Emery, Counsel to the Committee, who visited European countries as special commissioners of the Association.

The Committee has established headquarters at 706 Locust Street, St. Louis, Mo., where information may be obtained.

A sub-committee of this larger committee of fifteen members has completed a draft of a Compensation Bill suitable for adoption by the several states.

An accident prevention expert with many years' practical experience has been engaged, and his services may be had by members of the National Association of Manufacturers without cost, and by non-members at a reasonable figure above cost. Through *American*

Industries, the official organ of the Association, much valuable material relating to accident prevention and to practical safety devices is published.

More than 500 lantern slides of safety devices suitable for instruction are now at the service of members who desire to exhibit them. Additional slides will be added to the collection. Copies of all slides will be sold or loaned at cost to those members who desire to promote "safety" by means of illustrated talks.

The Committee has demonstrated the success of motion pictures for instruction in "safety" and has caused a number of special "reels" to be produced, at great cost. These films are being shown in all parts of the United States.

The chairman and the counsel of the Committee have addressed many public meetings, conventions, legislatures, and commissions on the subject of accident prevention, and both these gentlemen and other members of the Committee stand ready to help bring about a better understanding by public talks.

The Committee will gather information upon the latest standard forms of reports and records regarding work accidents, also regarding medical aid, and information as to stock, mutual, self and state insurance. Correspondence is invited upon these topics.

The Committee will co-operate with any and every organization, which may be able, in any degree, to further the work in which it is interested. Through co-operation with insurance concerns it seeks to establish schedule rating of risks which in the same manner as the fire schedule, shall provide subtractions and additions of rates contingent upon the accident prevention activities of each insurer.

This practice, in the opinion of the Committee, will prove the most effective means of stimulating practical accident prevention, which it holds to be the most important phase of the whole problem.

THE MICHIGAN EMPLOYERS' FACTORY INSPECTION PLAN

JOHN TRIX, President, American Injector Co., Detroit, Mich.

Mr. Chairman: They say I am to represent the Michigan employers. That is not the case. I represent the Employers' Association of Detroit which is composed of two

hundred and seventy odd firms who have banded themselves together for just this kind of work. We have been interested in this subject for a number of years, but we became more so when Mr. Schwedtman and Mr. Emery came to our town and gave us a talk on this subject. Later they came again with lantern slides and showed many ways that accidents could be prevented. I am more than convinced that President Kirby is too conservative, that not only can you prevent 50 per cent, but you can prevent 70 per cent of accidents if you will get the hearty co-operation of the employer and the employe.

In Michigan, as in most states, we had factory inspectors appointed for various reasons, sometimes because they had a cousin or sister, or aunt, the relative of some politician, sometimes because they had some political pull, and the Lord only knows what, but they were appointed and a great many of them knew about as much about machinery and factory inspection as a cow knows about a Fourth of July celebration. It always takes the straw to break the camel's back in everything. We had a factory inspector appointed for Detroit who, by trade, was a barber (laughter)—that is, when he was working (laughter). By profession he was what we call the "ward heeler," or politician. You can imagine how a superintendent would feel when a man of that character came into his factory to tell him what to do.

We decided that we would go to work and hire our own factory inspector and we went at it. We found a man who was accustomed to factory work and knew machinery when he saw it, and when he came to our factories he was our man, and not only did the principal of the institution go with him, but the superintendents and foremen.

At that time I happened to be president of the organization, and the first factory he visited was mine. Being a mechanic I thought I had that shop in pretty good shape, and I kind of smiled when he came, and I said: "All right, I will go with you." We went along and he said: "What would prevent a man falling down that coal hole and breaking his neck or breaking his arm?" I said: "Nothing, I guess I will stop that." We went along a little farther, and he said: "What would prevent some of your help getting into the gear of that rumbler?" I saw it. "Nothing," I

said, "we will remedy that." We went into our foundry that I thought was all right. In fact, I knew the foundry was all right because I had been looking after that myself. He said: "What is that man doing with those summer shoes on?" "There would be a good place to put some of that hot brass you have there." Two other men had bad shoes on.

Well, I began to think I did not have the ideal shop, and I did not. He went all along through the building and he found a great many things that needed looking after, set screws, you know what these square headed set screws are, and he came to an automatic screw machine, and you know how they fasten the rod with a set screw. He said: "That would be a good thing to catch a fellow's sleeve on." My foreman of that department was along with me, and he said: "That fellow is getting too damn finicky for anything." Well, I kind of thought so myself. I thought he had gone a little bit out of his way to talk about that, but do you know that within three weeks that foreman's sleeve was caught on that very set screw, and it took about an ounce and a half of his muscle with it. That set screw is not there any more.

It was not compulsory for members of our organization to obey his orders, but he would go into your factory and make a verbal statement to your foreman or your superintendent, and if he found you in the office as he was coming out, he would tell you the same thing, and he would go to our headquarters, and there he would furnish you with a typewritten statement that he had made, and a record was kept at our office.

As you probably know, we have some very, very large institutions who use immense big punch presses. He reported to one institution three times about one of the large presses that should have on the two-handed safety appliance, and, for what reason the superintendent did not do it I do not know, whether it was because he feared a little reduction in the output or not, nobody knows, but one of the old men who had been working on that punch press was working over time, and with one lick he lost both hands. The firm got hold of that man before the ambulance-chasing lawyer was after him, and they settled with him. They gave him $7,600. They then went out and bought him a piece of real estate that furnished him with a home and an income from rental of $60 a month; he is

employed about the institution now doing such things as a man can do without hands, at a nominal salary. They have tried to make good their wrong. It was their wrong, pure and simple.

Another case was an elevator shaft that was not closed, not completed, and workmen got the habit of running through underneath. They were told twice and finally crushed a man.

Another elevator had something defective about it, the machinery part of it; it would run to the bottom and would not stop, start right on its upward course. It took a leg off a man.

We have quite a record of things, but they are getting less every day, happily to say, because we are realizing that our inspector is onto his job and knows what he is talking about. We have had a great deal of trouble and have yet, to make the workman, the employe, use the safety devices. We just had a case where a spindler or a guard on a rib saw was taken off and put to one side, and the man lost four fingers of his right hand.

One particularly large institution that uses a great many cars and has a great deal of shunting on the switches in their yards, found that their men had been for years running across these tracks. The inspector went up to the manager, and said: "You want to go to work and put a tunnel through here underneath this. You will have some bad accident some day." Well, it meant some expenditure of money, not alone putting the tunnel underneath these tracks, but they had to go a great distance to a sewer so they could let the water away from this tunnel; they kept on and finally they ground up a man, and then they went at it and put the tunnel through. After they had this tunnel all nicely completed, the manager sent for our inspector and he took him up on the third floor and, as the whistle blew, he brought him to the window and he said: "I want you to look at this." About three thousand men crossed over the tracks, and about fifty of that bunch went through the tunnel. The manager laughed and said: "What have you got to say to that?" "only this"—he had his wits with him—"I forgot to tell you to put a fence from the factory to the edge of the tunnel," which they did, a four and one-half foot wire fence. Now they all go through the tunnel.

I have this to say to you, take a hand in this proposition. You have heard what our president said, the enormous loss it is to our nation, the enormous loss it is to our American workmen and to our

industries, and we can prevent that loss, I am positive we can reduce that at least 70 per cent if we will work together, and want to say to you that I am always ready and willing to do my part anywhere.

I made a record before I left our city, showing what our inspector had reported in about sixteen months:

Exposed set screws, 833.
Unguarded gears, 257.
Exposed bolt ends on couplings, 310.
Guards for woodwork on machines, 136.
Unguarded belts, 130.
Unguarded pulleys and fly wheels, 63.
Exposed keys, 60.
Stairs not provided with rails, 87.
Fire doors blocked or out of order—Now, there I want to say we added, after we found he was a success as a factory inspector to prevent accidents, we added to his duties the function of trying to reduce the hazard of fire, or loss by fire. His recommendations have proven very successful and where they have not been followed they have been fatal. He reported twice to a concern that there was some defective wiring in their pattern shop. They had a fire, with a loss of $20,000, and the annoyance of making new patterns and core boxes, and you, as mechanics, all know what kind of a job that is.

Another recommendation was a fire wall and fire doors, which was ignored, and they "went up" and had a loss of $65,000 in money besides losing the trade that they had. They were supplying automobile accessories. This concern lost one of the biggest contracts they ever had just because they had this fire which could have been prevented if they had obeyed this inspector's orders.

He reported fire doors. He had one report in, at a very dangerous place they piled up old cast iron and it took a man three-quarters of an hour to remove the cast iron before he could close the doors. He looks after the greasy rag proposition, and he has come to the place now where he has the authority to walk up and tell your workman, when he finds a workman that is laying a safety device to one side, or not operating it right, or is not taking care of himself—he does it in a very nice way and he makes a record of it, and if it happens again, the office usually knows it and there is a change made there. In that way we have been able to reduce accidents.

Unsafe ladders, that our president spoke of: I had two of them on first inspection. There were no feet on those ladders and they would slip.

Unsafe ladders. 91.

Elevator gates, etc., 98.

Boilers, low water alarms, valves, etc., 66.

Unguarded emery wheels, 100.— I had a case of that the other day in my own factory. They took the guards off and I asked the man why. "Well," he said, "I had a big piece to grind." I said, "after you got through why didn't you put it back?" "Oh, I forgot it." I said, "That won't go again."

Fire extinguishers: There was something very laughable about that. There are 173 of them that would not go off on a bet, you couldn't shoot them off with a cannon. (Laughter.) They had been there so long, that it was forgotten when they were filled or when they were bought, now he has these re-filled and tags them with the day they were re-filled.

Miscellaneous, 353. That is big and little things that we don't mention.

A total of 2,891, of which 2,670 have been taken care of. You see there are still a few that are not provided for.

I do not know as I can say anything else to you only that I am pleased to be here to face so many of my kind, good old time mechanics. (Applause.)

THE ECONOMIC VALUE OF INDUSTRIAL SAFETY

M. W. Alexander, General Electric Co., Lynn, Mass.

My fundamental proposition is this: That as soon as a single employe is killed or injured in industry while pursuing his daily work, the problem of accident prevention, of safeguarding premises, work shops, machinery and tools, and of safeguarding the employes themselves against injuries, will cry out for attention, and no industrial manager will receive a clean bill before the bar of public judgment, unless he can show conclusively that he and his responsible assistants took every reasonable step to prevent even this last accident and injury. At times an act of God will be the sole cause of an industrial fatality. In that case,

and only in that case, shall we sympathize and mourn without resentment.

I believe, than on the other hand the finger of public scorn should point decidedly toward all those employes who, although warned of the dangers, given all facilities for protection, do not heed the warning and neglect the protection and thus cause an injury to themselves and very often to innocent fellow workers. Common-sense, it seems to me, should prevent the employes from assuming such attitude for, they must realize that it is their lives that may be maimed, and their bones that m ay be crushed, and their families that may be deprived of a supporter, through an industrial accident.

The employer, on the other hand, should have humane consideration, as well as economic consideration, as the impelling force for establishing safe and sanitary working conditions. I purposely link "safe" and "sanitary" because while different in degree, it seems to me they are part of the same great subject, with the line of demarkation drawn but faintly. Legislation, so-called Workmen's Compensation legislation and similar laws have in general not taken cognizance in this country of the sanitary feature of the problem, but dealt more with what is called industrial accidents. This, however, is done and properly done in order to place the financial burden of such legislation only gradually upon the industries, the employers and the general public, and no doubt as the years roll by and within a comparatively short time the sanitary feature, the sanitary prevention, will assume, legislatively as well as otherwise, the same importance as is to-day given to the industrial accident prevention.

I say humane as well as economic consideration should be the impelling consideration with the employers. It seems to me to be entirely unnecessary to throw any artificial spot-light on the justification for humane consideration. A general course in ethics, rather than a lecture in safety work would seem to be the remedy for any lacking sense of appreciation on that score. On the other hand, the economic consideration should be brought to the foreground again and again in an effort to show to the employer that in the long run it is far cheaper, besides being more humane and more satisfactory, to prevent an accident than to pay for the consequences of such an accident.

Two principal thoughts come to my mind, in speaking of the prevention of accidents. The prevention of accidents does not lie merely in the establishment or in the application of proper safeguards to the machines, to the buildings and to the premises. If we can trust statistics so far gathered and statistics on these subjects are very new and incomplete in this country of ours, if we can trust these statistics less than one-third of all accidents could have been prevented through mechanical and electrical devices. More than two-thirds are due to other causes, and in this brief space of time at my disposal, I want to most emphatically make the statement that the most important safeguards we, as employers, can install in our factories are not guards over gears and wheels and moving levers, but the instilling of proper care in our workmen, and the best that the workman can do in protecting his own life and limb and those of his fellow employes is to exercise due care, and therefore the whole problem of accident prevention, to my mind, becomes immediately a problem of education, and there is the hopefulness of the whole outlook. I would not be in this movement for our company of more than 55,000 employes, where there is plenty of opportunity for study of these and kindred problems, if it were simply a question of looking at a machine and covering its moving parts. I am in this movement essentially because to my mind it is a movement of education.

And here is the other thought, and linked with this thought of education; we might easily, and in many instances do, go too far and, by going too far, perhaps cause as much damage as if we would not go far enough in safeguarding our work shops and machinery. I know in bringing out this thought I may strike a somewhat unpopular chord, because it is the fad of the age, as well as the heart's desire of all people to do everything possible in covering everything that might spell danger, and anyone who, in most enthusiastic terms and in superlatives, speaks along these lines will have the applause of the multitude, but I am not speaking to the multitude; I am speaking to practical men, so I do not hesitate to throw out this warning, that we might go too far in this effort and cause some damage, psychologically speaking. In this way: The workman, after all, is only in the factory perhaps one-third of his life, day by day. It should be, there can be no question, our duty to make our machines safe, to cover those moving parts, those

parts with which we might very easily come in contact, even though we exercise due care. But if we go to safeguarding things that are outside of his reach, as I have seen again and again, and try by such means to imbue the employe with the idea that we are not only making safe machines, but we are making "fool proof" machines, that even if he does not care a bit about his own safety he could not get hurt, what will be the consequence? The consequence will be that as soon as he goes into another department of that same factory where the safeguarding process has not yet been carried on quite as far, or when he goes into some other factory where some of the machines which he has been used to work with as "fool proof" machines are safe but not yet "fool proof," he is very apt to get caught, and furthermore, being trained to disregard this due care of himself by our overzealous efforts, what will happen to that same man when he steps out on the street with all its dangers, autmobiles whizzing by here and there, and in his home where we have no jurisdiction in guarding against the many dangers that exist.

Do not misunderstand me. I am as much as anyone in favor of doing everything reasonable to make work shops and machines safe, and guard the workingman against danger, but we must not go too far in that direction, and we must by no means overlook the equally and more important feature of preaching to him every day that he must take proper care of himself for his own sake and the sake of his fellowmen, so that he may be able to cope with all the situations and emergencies that arise, and against which, after all, no one can guard beforehand.

As practical men, just let me call your attention to one point. Isn't one of the most dangerous points on a lathe the lathe dog, with its protruding set screw and its tail, running usually at high speed? Would it not be far more important to guard that moving element than the back gears which the workman comes in contact with but seldom, and against which he can guard himself much more easily than he can with his tool or his file right up close to the lathe dogs. How many injuries have happened in your factories from lathe dogs? Extremely few. Why? Because the workingman is on his guard. And yet there are efforts being made to safeguard the lathe dogs, covering them up one way or another, and in our own company I am helping in that issue, not because I think it is the

right thing to do, but because I want to be careful not to puncture anybody's enthusiasm. And yet, if lathe dogs are guarded, how about the casting put on the face plate with its protruding corners. Now, if a man has been working for months and months with safety lathe dogs, being perfectly careless as he runs up with his tool or file, as he runs over the machine, and then again is working on a casting on a face plate, is he not more apt to be caught by that casting than he is now, where the very function of the lathe dog teaches him due care every day?

Gentlemen, take that one thought and think it over a little, but bear clearly in mind that nothing will be achieved in this whole world if we simply safeguard without at the same time educating the men. Mr. Miles, I understand, will take up this particular phase, this educational phase, therefore I will not say anything on that.

Since it is expected that I am going to say something about General Electric safety methods, I want to speak to you a few moments, not claiming that what we are doing is just the best, but, if our premises are correct, I think each one of you may be able to find one or another feature of our administrative work in safety that might apply to your smaller work shops or corporations.

The General Electric Company, as I said, with over 55,000 employes, has nine major factories and some twenty subsidiary factories in the United States. Nine months ago, at my suggestion, we formed a committee on safety along these lines: Every major factory shall have a representative on the committee, and that man must be a practical man of the rank of superintendent, general superintendent, or some similar rank, a man who has experience, who has judgment, and a man who can be trusted with a certain amount of executive power in carrying out the decisions of the executive committee. I have the pleasure to be for the present the executive officer of the committee. This committee meets once a month and discusses methods. There is no safety inspector, as such, in any of our factories, which may seem like a very strange condition, but we handle the matter in this way: Every member of the general committee representing his works must form a local safety committee of which he is the chairman, and that local safety committee again is composed of superintendents, general foremen foremen and assistant foremen in his factory, men who are right in the game all the time and vitally interested in having everything safe

and accidents prevented. If any question comes before the general committee it is there discussed and then it is voted to recommend. It is not voted to execute but voted to recommend, and that recommendatory vote goes to the local safety committees for their consideration during the month, for their consultation with the interested parties in the factory, and with their work manager, whose judgment and whose interests at all times must be highly respected. At the next meeting that vote to recommend is called up and now we vote on the basis of each individual factory's experience and study, and if the vote stands at least seven to two, usually it is unanimous, then it is a vote of executive power which cannot be overridden except by the vice-president of the company on the score of expense only. Now, it seemed to us that in the initial stages it is far better than to have made it one man's business to go around and prop up the others to make things safe, to put it into the hands of a larger committee in each factory of the men vitally interested, of men who come in contact with the machinery every day and feel the responsibility for their own departments. At some future time, not yet, but in the course of a year when we have given our local committees a chance to do their work, and the managers an opportunity to come in close contact with their local committees in the work, when I think the general committee will engage a general inspector to clinch and go around to further stimulate and to assist.

The other thought of our work: Of course, we discuss safety devices, and we are trying to standardize safety devices, so that a lathe of any kind and a mill of one make is more or less safeguarded the same throughout all the factories of the General Electric Company. But, far more important than this work we consider the work of the study of the accidents, and every member of the general committee must every month send to me a tabulation of every accident that happens that calls for any attention. It may result in an injury, or it may not. We always must hold these two things apart, an accident may cause an injury or may not, and the injury may not be caused by what we term an industrial accident. But in that tabulation he must state clearly how it happened, and how it could be prevented, and from these various factories the monthly reports come in and are summarized and then read before the committee. Then we have a concrete basis for study and for

the educational work. It is not sufficient to state that an accident has happened, and then try to make the best settlement with the injured man that can be made. I think it is far more important to take that as a lesson as to what we should do to prevent the same or a similar accident in that particular department or factory, or in any other factory of this large corporation.

There is no competition in such matters. There can be no competition when it is the question of doing the right thing by our employes and if a point that we might have found, based on the investigation of an accident, could be given to all manufacturers of the United States in some way or another, I think we would have done a most humane work in pointing directly to the source of such danger and giving our associates a chance, before the accident happens, to apply the necessary remedy.

That much I wanted to say on the General Electric Company's methods. A great deal more could be said on this subject, as on the whole subject, and I suppose every speaker feels as I do, so full of it it is hard to stop just at the right point.

I want, therefore, to repeat once more, let us safeguard work shops and machines in a reasonable way, let us make them safe, not "fool proof," and the result will be care in careless workmen, and above all let us look at the whole matter as a matter of education, a matter of scientific investigation, of research work, and of sane application of the things that we have found. If we proceed along these lines I am sure we will do some excellent work.

And one more thought: The regrettable thing to me is, and I want to throw out this thought because it has its bearing on many similar things that are in the making just now, it is a regrettable fact that, barring a few notable exceptions, our employers throughout the United States did not get very busy on this important matter of accident prevention and safeguarding until they were forced by legislation. What they might have done voluntarily, and should have done voluntarily years ago with the applause of the masses, and which would, in many respects, have prevented a great deal of hostile legislation, they neglected to do until the legislation made it necessary, and not very often for any humane consideration. As you know, I am Commissioner of the State of Massachusetts, and thrown in contact with people dealing in these matters, and they were forced by these people and their legislative acts. Gentlemen, bear that in

mind, because there is a great deal in the relation of employer and employes in improving the welfare of our employes that our employers ought to do and must do, and unless they wake up and go to work and do it soon voluntarily, with all the wonderful effect that it will have on such relationship, legislative action will force them, and we will have to say again it is a regrettable fact that they have to be forced to do what they should have done on their own account (applause).

TRAINING THE APPRENTICE

MR. H. E. MILES, Racine-Sattley Co., Racine, Wisconsin

Mr. Chairman, and Gentlemen: That is not the first time that I have had to follow my friend, Mr. Alexander. You realize that anyone who does follow him feels that so much has been said that it would be well if he might be excused. I am going to approach the subject from a different standpoint somewhat. I am asked to speak for those in apprenticeship. I wish we had an established status in regard to apprenticeship, so that when one did speak of apprentices one spoke of a class so well organized and so well related to the social fabric that we could understand fully just what was meant. A friend of mine, Mr. Cooley, in Chicago, recently read the apprentice laws of substantially all the states of the Union, and he stated to me that those laws show clearly that the intent of the framers was to provide a place for our young boys other than reform schools or penal institutions.

Apprenticeship in this country, if the energies of a great body of well thinking men come to fruition, apprenticeship in this country will soon mean what it means in some of the foreign countries. It will mean a magnificent contractual relation between the man of distinction, the employer, who has come up through the industries to his place of prominence, and on the other hand the young man whose aspirations lead in the same direction. The apprenticeship contract will recognize the equal though different relations and rights of the two contractual parties. They will dignify the standing of the young man, increase our appreciation of the relationship, and in this country, as in Germany to-day, we will soon have a time when the boy who has not an apprenticeship in

trade, is the unlucky boy, and the boy who has an apprenticeship contract is assured of his future and is the fortunate boy.

In Munich 85% of all the young men who leave school and go to work immediately enter the apprenticeship relation. In our country I must leave you to guess the number, but they are so few that they are almost inconsiderable, except in some instances, as in Mr. Alexander's institution where they have such special consideration and appreciation of their rights and their opportunities, that they serve as the most excellent examples, and are a part of the inspiration that some of us get in hoping for the enlarged apprenticeship relation.

I may state to those of you who come from outside of the state of Wisconsin, that Wisconsin has just established a new apprenticeship law, and in that respect she has tremendously dignified that status. She requires now that no man shall make any apprenticeship contract, or anything resembling an apprenticeship contract, with employes, except as it complies with the requirements of that law. That law requires that the young man shall not work more than so many hours a week and that five hours of each week, not less than five, more if the employe is willing, the young man shall be given a special schooling in an industrial school that is required to be established in the locality, that they shall be taught in that apprenticeship school at the expense of the state, and without loss of wages from the employer; that they shall be taught each of the process machines in their trade; they shall be taught the use and the need of safety appliances and hygiene, and all those things for which your Congress especially stands, and they shall be taught English and citizenship. So in this state from now on the young man who will enter into, and the employer who will enter into, an apprenticeship agreement make a contract mutually considerate which assures the young man steady employment, assures him of a mastery in two or three years of his trade, with a wage that recognizes the various benefits.

I am asked to speak on apprenticeship, apprentices. Of course, that means all the youth of the land who are about to enter or who have recently entered into the industries. I cannot do that without telling you something of the situation of those boys as they come into your institution. I thoroughly appreciate the need of teaching them each of the safety devices, the guard that saves them from

the circular saw, the guard that covers the gear. You know that so well I am going to take up another phase of the subject, and I am going to ask you to work for that sort of industrial legislation that the laws of Wisconsin, for instance, require, that the National Association of Manufacturers approves, that safety that comes to the youth from a thorough mastery and understanding of the machine upon which the youth is put to work.

Statistics startle. Somehow it has been supposed that the great body of American children are being educated with some sort of completeness. It is now commonly known that one-half of all American children leave school at the end of the sixth grade, at about fourteen years of age, having learned only the "Three R's," which are not education, in any sense, but only the means whereby education may be attained.

Do you know substantially all of the American born boys and girls who enter our industries come from that one-half that quits school substantially without education, at the end of the sixth grade, or earlier? The figures to me were so surprising that I took them up with the Commissioner of Education in Washington. "Why," said he, "Mr. Miles, in some of our southern states 60 per cent of the children leave school at the end of the first, second and third years, and in Cleveland 50 per cent of the children quit school by the end of the fifth grade, and 60 per cent at the end of the sixth grade. To go to the other extreme, in St. Louis 72 per cent of the children leave school by the end of the sixth grade, 72 per cent with nothing but a little reading, writing and arithmetic. They know nothing of how to use their hands and eyes in the industries into which they are thrown. 72 per cent leave, and yet those schools are said to be the best in America, certainly among the best. 72 per cent of the child life thrown away, as it were, at the end of the sixth grade, thrown upon the industries utterly unprepared, a 72 per cent wastage, and the schools said to be the best in America because of what they do for the remaining 28 per cent."

A friend of mine canvassed a great locomotive works employing 3,000 hands, and of the total American workingmen in that great establishment making locomotives and boilers, a high class of work requiring a high degree of skill, less than 10 per cent knew the machines upon which they were working in any scientific way. Less

than 10 per cent of them could go readily from one machine to another of very similar character. Less than 10 per cent could go from one shop to another. In that establishment, a highly representative one, well above the average, less than 10 per cent had any mechanical education which enabled them to know the machine and operate it intelligently.

Gentlemen, we are spending half a billion dollars a year in this country for the education of only a fraction of the children and to the utter neglect, mechanically and efficiently of all of the children that come into our industries.

The great majority of our young men are what we call hand minded or concrete minded. They can learn only through the hands and the eyes. But, do not think less of them for that. Many of the best men the world over have learned through the hand, through mechanical appliances, through the contact with materials and the shaping of them. No stigma should be allowed to attach to a young man because he is not free in the acquisition of knowledge from the books.

This utter neglect of the industries, this utter inconsideration of the efficiencies of the youth of the land, has developed in our young men and women a love of ease and hate of work, a contempt for real labor. Many people say that our children leave school in these early years and come into our shops because the family haven't the money with which to keep them in school. Not so, in the least. Thirty-seven hundred families were investigated in Massachusetts and 70 per cent of those hand minded, concrete minded young men could just as well have stayed in school and had a mechanical training, had more real education, if only the schools had given them the opportunity. In Chicago a somewhat similar investigation was made, and there it was found that of the children who leave school at fourteen, simply because the kind of education is repulsive to their intellectual natures, is misfit, all of them were found to average, from the fourteenth to the sixteenth year, only $2 a week in wages. You can hardly conceive of a family so hard up it had to have its boy out at work on a salary of $2 a week. Those boys were simply thrown upon the street and thrown upon the industries. Our boys don't go into industries because they know them and have selected them intelligently. They walk down the street—and this is not opinion, this is record—they walk down the street and i

a cigar store has a sign out "Boy wanted" in goes the boy, and he is a cigar maker for life. He may have big, thick fingers and be utterly unfit for the occupation. If he goes a little farther and the boy is wanted for heavy machinery work, that boy may have a frail body, but if he can get the job he becomes a misfit mechanic for life.

All this, I am sure, you will feel comes within the province of safety. This haphazard hit and miss proposition, this dwarfing and stunting of the minds, is quite as important in the matter of safety in the operation of the machine as the guard itself over the saw. This lack of education begets carelessness and this carelessness accounts for injury. Carlyle better stated it when he said that: "All labor is divine in all true work, be it but true hand labor, there is something divine." Solomon said: "Wherefore, I perceive it is well that a man rejoice in his work, for that is his portion." I don't want to bother you with quotations, but let me remind you, as I was reminded by Mr. Pearse, the superintendent of the Milwaukee schools, that when the Maker of all things put his only begotten son in this world He did not put him in a bank's office to make a school-teacher of him, but He put him in a carpenter shop and taught him a trade and wisdom and knowledge came to him.

Let me contrast our country with Germany for a moment, to show you where efficiency comes in, and safety, and happiness. There these boys must leave school at fourteen. They must leave before they have the higher education which we seem specially determined to prepare for all our children. In Germany the great number of young men who in this country are thrown hit and miss on our industries, leave school at fourteen, as they do here, for it is at fourteen the mind opens, adolescence begins. In an interview with Edison the other day, he said: "Mr. Miles, I have not studied this very fully, but this I know, that at thirteen and fourteen the mind blossoms just as a bud breaks into flower. It is at that time that the youth determines that he will do, that he will accomplish, that he will control things without, it is at that time that the mind seizes upon the materials of the world in an educational way. Now," said Mr. Edison, "if we do not train our boys at that time, train them to know how to use their intellectual energies to the utmost advantage with sanity and vigor, if we hold

back and say: 'Don't, don't', this I know is exactly the same thing to the mind as the binding of an arm to the side, it abolishes it." Germany takes her children at fourteen who leave school and, with judgment, they are directed into industries in which they fit. And then she says: "You shall have to go to school," and the schools which they continue to attend are consequently called "Continuation Schools." Her children at fourteen, as now will be the case in Wisconsin, and we hope soon in the other twenty-five states, and later in our own states, at fourteen, when these hand-minded boys leave school they enter into the industries, they have their employment arranged by the day as here, but it is also provided by the law of the land that those children shall leave their employment and go into this continuation school for five hours of the week. It is a pretty hard strain to ask the manufacturers of the United States, or other countries, to become school-teachers. We have plenty to do to keep pace with our mechanical development.

The State must teach our children safety and such things. We will provide the apparatus, but the great majority of employers must turn the duty of instruction in that trade over to the community, just as we have turned over to the community the preliminary education up to the fourteenth year. So in Germany and now in Wisconsin at fourteen the boys who wish, leave school, but they must have a permit from an officer of the law, duly and carefully safeguarded. They enter into their employment and then, in Wisconsin now for five hours a week, in Germany, which is more advanced, usually from eight to twelve hours a week, those boys go to Central Industrial School, and, by the way, that school is controlled very largely by the employers and the employes. It is not an abstract proposition, and they do not learn much that a little later they must unlearn. The control in Wisconsin is one-third employers, one-third employes, and one-third schoolmasters. In this school, safeguarded by this control of the practical men of the industries, the boys are taught the mechanical side of the proposition, the principles and the art of their industry. The practice they continue to get in the shops.

By this sort of dual education, this recognition of the divine quality of labor, and the marvelous educational value of the hard day's work plus this continuation school of a few hours a week, Germany is developing a citizenship such as this country cannot

yet boast of in certain important respects. An inventory was recently taken by a canvass of one hundred and five of Germany's greatest institutions and 40 per cent of the men at the very top of the German institutions started life at from twelve to fourteen years in the industries, as ignorant and as uninformed as our boys are when they drop out of our schools, but, by virtue of the continuation school wherein these things were taught, they went up through the lower grades of the industry and are found to-day in control, of these one hundred and five industries.

The day has already passed in this country when the remark can be made that was made to Judge Lindsey some time ago by a school-teacher: "By the way, Judge, why don't you send this boy to the reform school where he can learn a trade?" Said the Judge: "Why doesn't the State give that boy such an education as will let him learn a trade without first committing a crime?" In our country our boys have to steal a trade. A single experience in my own shop illustrates. A fine boy came in and wanted a job. The foreman said: "We will put you on a punch, but we will put no man on any machine until he can understand it and can run it." The poor boy needed the money and wanted the job. He had never been at work on a punch, and this was the simplest kind of a press punch. He said, however, that he knew how to run it, and was put to work. So in a day or two he piled several pieces up on top of one another, and the punch came down and, meeting the piece at an angle the end broke off and the boy lost an eye. The time has gone when we can even, with reasonable assurance, hope to protect and safeguard the lives and limbs of our youths when the only way they can get into our shops is by misinforming us as to their ability.

I beg to suggest that as a part of this propaganda there will never be any such way out of the difficulties that now oppress and disturb the labor market,—the quarrel that exists between capital and labor—never any such way out as when we teach the youth of the land, all of them, and in all the trades, that you cannot get without giving, that you cannot limit the output and raise the wages, that you cannot shut the door of opportunity on nine-tenths of the boys of the land or on any of the boys of the land by closed shop methods. Our American labor has been patient, on the whole, it has been considerate of the managing class, the employing class; and in

my judgment it ever will be considerate to a degree. But, gentle men, when they ask for things they ought not have, let us stud carefully that we may give them as is our duty and our opportunit the things they ought to have, industrial education, safet appliances, and compensation for injuries, a far more proper de velopment than they themselves ever could dream of getting i they had their own way in determining it by the force of the bice muscle and an occasional stick of dynamite.

Just one word to the young men who are present. There ar many operatives from our Trade School here and I want to sa that the rule of life is service, and the employers and the employe in these matters are standing together, and I hope I am not wic of the mark in advocating this feature of public education at publ expense as a great part of the propaganda for safety devices an protection.

Thank you gentlemen (applause).

PRACTICAL SHOP SAFETY

Mr. J. P. Bird, General Manager of the National Association of Manufacturers, New York

Gentlemen, my president has advised me that I can speak twen minutes. I want to assure you my few remarks will be unique one particular. They will constitute the shortest speech made th morning, and I hope it will include something you will take hor with you as a practical suggestion.

I feel that I can speak to manufacturers as a manufactur for I have devoted the greater part of my life to manufacturin starting as an apprentice I have gradually worked through to t ownership, or part ownership of the business. Therefore, wh these questions come before us I can view them, not only from t position of the manufacturer, not only as they apply to the Assoc tion or its activity, but I endeavor to place myself back again the time when I was an apprentice and consider matters from l point of view.

Let the manufacturer maintain in his efforts toward the preve tion of accidents, as he does in the business—and I am only trying

apply to this question a practical business proposition,—the executive position. Form in every department, no matter how large or how small, of your institution an accident prevention committee of your employes. I do not mean to give those employes the absolute right to install any device, but I do mean to do in accident prevention that which you do in your regular daily business if you are wise men, have the advice of the men behind the machine. That will answer your questions of "fool proof"; that will answer your questions of education, that will answer the question of interesting the men in the very proposition that you want them interested in. Don't leave it to your superintendent or manager or foreman. And I do not mean for you to tell the men: "Come around at 7:30 to-morrow night, and give me two hours of your time discussing how I may prevent accidents that may happen to you," but if you invite them around at 7:30 o'clock at night, pay them for the time they come there, and it is money well invested.

EDUCATION IN ACCIDENT PREVENTION

M. W. Mix, President, Dodge Manufacturing Company, Mishawaka, Indiana

With the development of the new doctrine of Indemnity in the case of occupational accidents, which disregards the assumption of risk, negligence of fellow employes or contributory negligence as defenses to the employer, it becomes necessary to consider the question from a purely educational standpoint, establishing collaterally therewith the doctrine of prevention of accidents.

In nearly every large establishment, some special thought is being given to the safety of employes; as a result, their employes are becoming aroused to the necessity of looking out for their fellow-workers and themselves.

The average individual at work for himself or in the pursuit of his own happiness, will take more chances with his life and limb than it is necessary for him to take in any employment even as the state of protection stands to-day.

There will be no change in this popular disregard for personal safety until there is an established public conviction, an active, yet

subconscious state of mind that automatically thinks of "safety first."

No employer designedly exposes his employes, and on the other hand, it may be said that few workers purposely put themselves in harm's way.

Years of education and sad experience have taught even the most heedless of men owning property, that it pays to prevent fires. Such precautional measures with reference to fires are second nature to most people, and the same thought must be created in behalf of accident prevention.

The same relation must exist in all minds, with reference to accidents as exists with reference to contagious diseases.

It will be the work of a generation and perhaps two generations to bring every one to this state of mind. The education should commence from the cradle—carried through the public schools, and then to the occupational field.

All classes must be made to recognize its force from a standpoint of preventing waste—just the same as sickness is now being regarded.

There will always be indifference, yet this may be largely overcome if the teachings are sufficiently impressive and started early in life.

It is a case of drill—*drill—drill.*

Just now the railroads, mines and manufacturing establishments are receiving the principal attention of the Social Welfare workers, and especially of the stump speakers,—presumably this is because of the larger units represented, and the attraction of a "shining mark."

But with this doctrine recognized as one of universal responsibility, it means that the entire public will be affected and must become aroused to the importance of a wise and equitable basis for dealing with the situation.

Heretofore, such employers as agriculturalists, horticulturalists, the small tradesmen, such as building contractors, involving a variety of craftsmen, employers of domestic labor, etc., have given but little heed to the progress of this question.

It goes without saying that they will eventually become involved in its workings, because—man for man employed, or dollar for dollar of wages paid,—the aggregate of these employments far

exceeds those of the factories, and there can be no doubt of their ultimate responsibility under any employers' liability or Workmen's Compensation act.

In none of these trades of occupations are there the same elements of protection to the workers.

Take the farm as an example, the machinery is more dangerous than the factory machinery, the work conditions are more hazardous, man for man, and less attention is paid to the prevention of accidents. There is also lacking the fine discipline of an organized factory, and men take more personal chances every day.

In Germany, statistics show that nearly 45 per cent of the occupational accidents are in agricultural and horticultural pursuits, which demonstrates beyond doubt, the need for covering this field in all general relief measures.

The same criticism as to exposure and protection may be made of the minor trades, where the number of employes per establishment is small and supervision is uninformed and correspondingly limited.

The working of the present laws, in a number of states, attaches a serious burden to the small employer, and it is, in fact, becoming a hardship for such employers to get labor on account of the lack of responsibility in case of accident, and this condition will be accentuated as time goes on.

Insurance of some kind must be provided wherein the individual risk will be spread over the entire trade and be made compulsory. There can be no separating of the sheep and the goats—they must all go together, or the doctrine will fall of its own weight.

It must be evident, therefore, that all hands must be "piped on deck"; all must become fully informed on this subject; there can be no valid excuse to justify a lack of interest on the part of any employer or worker, else there may be a condition brought about that may throttle our very industrial life.

This question may be first solved with such a vengeance that the much lauded system of Protective Tariff for infant industries would pale into insignificance, as against the protection that small employers may need under an extremely paternalistic solution of the occupational accident question.

"An ounce of prevention is worth a pound of cure", is one of the oldest maxims, but it has not been brought home so effectively

to the employer until it has become a direct financial burden, and a recognized element of unnecessary waste.

In addition to a national campaign of education, what is now needed, is a uniform nation-wide standard of protection to workers in the various lines of employment, and coupled with it must be provided a highly developed form of Standard Factory Inspection with appropriations of sufficient size to insure competent and ample assistants, with provisions for complete statistics on all work accidents. At the present time, we must work more or less in the dark until proper standards may be established. In this, we may receive much benefit from Germany, where are maintained as public records, full statistics on all trades and in all sub-divisions of the Empire.

German standards of protection may not be suitable for us, but they may at least form a basis from which our own standards may be developed to suit our particular conditions, both in individuals and in occupational environment.

Warnings have been sounded against our going to extremes, and it is not infrequently the case that after so much agitation, we may quickly adopt the principle and swing the pendulum so far to the opposite side that it may result in our raising a large number of dependent, thoughtless workers, who will have none of the instincts of personal care because of the lack of exercising their faculties. Hardships are best endured by those who have had experience and to those who have never experienced danger, nothing seems dangerous.

The Manufacturers' Bureau of Indiana has given much time and thought to accident prevention and Workmen's Compensation, and it firmly believes that any movement that does not include all employments will eventually fail, and that the greatest relief will be found in inaugurating a campaign of education throughout the state on accident prevention, and requesting a more complete system of State Inspection and Statistics than we now have, covering all employments, regardless of size or kind.

In order to bring this matter of safety directly to the employes of the Dodge Manufacturing Company, the management have prepared a plan of education and competition between departments and their foremen.

This is in the line of a percentage Score Board, such as indicates

the standing of teams in the baseball Leagues. The starting point is 1,000. Each division is penalized according to its accidents—minor accidents of less than one day's absence not as yet being considered. Each day's absence bears a percentage charge in proportion to the total number of men—days per month in each division.

The foremen of all of the divisions scoring 1,000, or those holding the first three places below 1,000, will receive prizes of personal interest each month. The foreman scoring the largest number of first monthly prizes for one year, will receive a special prize at the end of the year All divisions holding a percentage for the year of 1,000, or the highest annual percentage, will receive two days' full pay as a reward for their good record, and the second highest will receive one day's pay extra.

This plan is rather a crude form at present, but it will be of daily interest, because of its competitive nature, and will facilitate the inculcation of preventitive measures and of individual care and forethought, as well as speedy and prompt attention to reduce the severity of the accident and shorten the time of absence.

At all events, the interest in the daily score board, which is 24 feet long, and erected at the Main Works' entrance, will afford a splendid vehicle for carrying influence to the worker.

Each week a spirited or expressive motto will be placed at the head of the board that will surely have an excellent effect on the daily thoughts of the workers.

The slogan must be—"Education" in order to produce in the individual mind an automatic, subconscious, ever-present thought to "look out for yourself first and the other fellow always."

Safety Committees are good things, but they do not go far enough. They educate the worker, the foreman and the official. All must be thinking of the subject; every individual must be a committee unto himself, and do so from the standpoint of a real interest in preventing accidents, stopping waste, avoiding suffering and disability to his fellowman.

When the whole factory or the whole field of workers will so regard accidents, the problem will have been solved. In the language of a famous advertiser—"Eventually, why not now?"

THE INDUSTRIAL BETTERMENT SPECIAL

D M Perry, Former President of the National Association of Manufacturers, Indianapolis, Indiana

The prevention of industrial accidents, and the elimination of waste caused by diseases incidental to industrial pursuits, have become most important subjects in this country during the past four years. A proof of this is given by the noteworthy Co-operative Congress we are now attending.

The fact that so many eminent men, scientists, engineers, manufacturers and students can be brought together at a busy time of the year to discuss for four days the progress of the movement for Safety, and the best methods of reducing the loss of human life and limb, is convincing proof that we are at last deeply and permanently interested in a campaign against industrial waste.

Much has been accomplished during the past five years as the papers already presented before this distinguished Congress fully testify, but much remains to be done. We are only in the skirmishing stage of the war, but like experienced generals we are marching ahead slowly and testing our way.

Our Chairman, Mr. Kirby, has already told you of the profound interest taken in this laudable work by the N. A. M., but he has asked me to announce a new departure in the campaign, one which I know will interest you and I feel certain will enlist your cordial co-operation.

Those of us who have given the subject of increased industrial safety much attention; those of us who have had opportunity to learn the strength and the weakness of the campaign, have not failed to note one important fact—the lack of really efficient methods of reaching and educating what might be called the masses.

A great quantity of educational literature has been published, many conventions have made industrial safety an important feature, and a large number of manufacturers have assiduously devoted money and time to the improvement of working conditions in their plants, but there still remains unaccomplished the actual enlistment in this work of the rank and file, which after all is said and done, are the ones to be directly benefited.

The problem of safety education has appealed strongly to all of us, and every man interested in the movement undoubtedly

has endeavored to suggest a plan or has endeavored to co-operate with others who have advanced more or less practical solutions. The railroads of the country, for instance, have accomplished a great deal in interesting their own man. Many roads have very active committees made up of employes with special officials in charge. Money has been spent freely, and the results are shown in the decreased loss of life and the reduction of accidents.

Some of the large industrial corporations have taken up the subject of safety with the intelligence and business efficiency they have applied in the up-building of their industry. They too, have organized committees and expended large sums of money, and the results have been satisfactory in connection with their particular employes.

Associations, both national and local have added industrial safety, or as it is generally called, accident prevention, to their committee work. The conventions of the national organizations now give a marked period of time to this movement and the effect is becoming manifest. The Federal Government, and many of the state governments are showing increased interest especially in the direction of experimental legislation, and much is to be hoped for from this quarter.

Finally there has been developed in New York City, a splendidly equipped Museum of Safety, which, with the financial aid of certain public-spirited citizens and corporations, is displaying in several large rooms a really effective exhibition of accident-prevention appliances and material of kindred nature. This exhibit, patterned after museums in Europe is, as I have said, a very praiseworthy institution, but unfortunately its value to the cause is limited by its immobility, so to speak.

Nothwithstanding its wide collection of safety appliances, and its interesting photographs and diagrams, the fact that it is tied down to one spot and practically inaccessible to the working classes reduces its efficiency tremendously.

During the past two years the National Association of Manufacturers has held exhibits of accident prevention appliances, models and photographs at its annual conventions. These were largely attended by manufacturers simply because they were on the ground as delegates to the conventions. Last May, a special motion-picture exhibit was given, and fourteen hundred workmen came

to the Waldorf-Astoria at five in the evening, but it was an extremely difficult task to provide for their presence.

The fact that they came at all, and the additional fact that the immobility of the Association's exhibit was also very apparent has caused the Association to embark upon an entirely new phase of safety education.

This new phase is the utilization of a special train of railway cars, equipped and organized as a moving exhibit which will visit the industrial centers of the country, and carry to the factory and to the homes of labor the last word in the campaign to reduce industrial waste, and to prevent as far as possible the deadly sacrifice of human life and limb.

The purpose of the tour of this special train, is to awaken the industries of the United States to a realization of the economic waste now resulting from a lack of knowledge of practical accident prevention, equitable workmen's compensation, and of efficiency in fire prevention; the lack of practical methods of educating the youth of the land in industrial pursuits, and the apparent failure to utilize foreign trade opportunities. It is anticipated that the novelty of the plan and the method of presentation, will serve to impress these facts upon both employer and employe.

The special train will include the following: One combination baggage and passenger coach. One large car equipped as a moving-picture theatre. Two cars devoted to working models of accident-prevention devices in general use, together with a wide range of photographs illustrating accident-prevention devices. One car of three compartments devoted to instruction on industrial education, fire prevention and export trade. One car for living purposes.

An important feature of the Industrial Betterment Special will be the motion picture car, a novelty in educational work of this nature, which will be equipped with complete apparatus for showing industrial films under the best conditions. This car will seat 100, and will be utilized in the smaller industrial towns for the benefit of the workmen employed in the factories adjacent to the railroad yards.

In each industrial center exhibitions will be given in the largest available hall or theatre. The exhibitions will be held each evening and free admission will be given to the public, and especially to workmen and their families. Comprehensive motion picture

films, specially prepared for this campaign, will be shown in connection with accident prevention, workmen's compensation, industrial education, fire prevention, and foreign trade. Experts will be in attendance, and lecturers will describe the various activities. Literature, specially prepared for the tour, will also be distributed.

Special committees, formed of the members of the National Association of Manufacturers, working in close co-operation with local employers' associations, will have charge of arrangements in each industrial center visited, and every effort will be made to attract to the exhibitions workmen and employers in small towns within easy trolley distance.

Preparations are being completed to have several factory inspectors accompany the train, thus enabling manufacturers to avail themselves of expert technical advice in equipping their plants with safety appliances.

The fundamental purpose of the Industrial Betterment Committee's work is practical education in the four important phases of industry, accident prevention and workmen's compensation; industrial training of the youth; abating the scourge of fire; and the increase of our over-seas trade.

It is believed that this will be accomplished through the cordial co-operation of employer and employe, to each of whom will be demonstrated the absolute necessity of uniting against a common enemy—industrial waste. The campaign will carry this message direct to the factory and to the home of the workman.

ACCIDENT PREVENTION IN FOUNDRY AND MACHINE SHOP

FRANK MCKEE, Safety Inspector, Fairbanks-Morse Co., Beloit, Wis.

The subject of accident prevention is one which has, during the past two years, become to nearly all large manufacturers and to a great number of the smaller ones, as important as the question of output. A study of the causes of accidents in and about the machine and Foundry, will show that these accidents can be traced to the following causes: Carlessness of employes, ignorance, defective machinery, insufficient lighting

facilities, overcrowding of floors, frayed and unsuitable clothing, and lack of proper safeguards.

Nothing but a systematic course of instruction and education of laborers, machine operators, and foremen will ever overcome the first two causes. The employe must be taught how to do his work so as to avoid injury to himself and to his fellow workmen. He must also be thoroughly impressed with, and be made to constantly bear in mind that carelessness on his part is apt to cause a serious accident. This can best be done by the establishing of a safety department in the plant, which will have power to draw up sets of rules; regulations and instructions that will tend to reduce accidents. No new employe should be set to work at any occupation without first being instructed as to the dangers incident to that occupation, and no old employe changed from one position and started in a new one before being cautioned against the possible points of danger connected with it. In this connection Fairbanks-Morse Manufacturing Co., have followed out the plan in operation in the Illinois Steel Co., of giving each employe a card when he is started to work which is signed both by himself and his foreman, the employe signing the statement that he has been instructed as to the dangers connected with his position, and the foreman signing the statement that he has so instructed the workman. Where the man is broken in by another workman, this man signs the card instead of the foreman. Rigid shop rules which thoroughly cover all points of danger connected with the industry should also be issued to all employes, and as far as possible printed in the language of the workman. The importance of thoroughly familiarizing himself with these rules, and of living up to them, must be impressed upon the workman, and it rests with the foreman and shop superintendent largely to see that this is done.

While defective machinery has caused numerous accidents, it is one of the causes which the employer and all of those connected with the output of the shop should never allow to exist. It is an undisputed fact that a machine in bad repair cannot give either the quantity or quality of work that can be obtained from a machine in good running order. To overcome this, all machine operators should be imperatively forbidden to operate a machine which is out of repairs in any way. Defective scaffolding and other temporary structures have caused numerous accidents, and here again

the educating of workmen and all others concerned, can best overcome this condition. It has frequently been found that in order to hurry a job, especially on repair work, the feeling is to use "whatever material is most handy" and risks are needlessly taken, when a few minutes more time would have made the apparatus perfectly safe. The refusal of all in authority to countenance any such unsafe methods will quickly put a stop to this cause of accidents.

The question of proper lighting is one that has to be solved according to the nature of the work and surroundings. It is one that has occasioned much thought for our engineers during the past few years not only from the safety standpoint, but from an efficiency standpoint as well. The old system of small individual lights at each machine and almost total darkness in the isles and passageways where men have to walk is fast dying out. The engineer in charge can do a great deal towards the reduction of accidents from this cause by seeing that light is evenly distributed throughout all parts of the shop or yard where men are forced to go in the discharge of their duty, instead of having a great deal of light concentrated upon certain parts of the shop or yard.

Over-crowded floor space, improper piling of castings, and absence of proper passageways, will be found as the cause of a great many preventable accidents. The crowding of machines together and disregarding the safety of workmen who have to move around them, rests entirely with the management. Sometimes safety railings can be introduced, but in a great many instances are not practical. Workmen can be educated into keeping the floor space neat and tidy, castings properly piled and blocked, but it rests with the employer to see that passageways and aisles are kept clear and unobstructed, and that waste materials are promptly removed. One good plan we have found to keep aisles clear is to paint dead lines on the floors with white paint, it being thoroughly understood that the space between these lines must never be used to pile materials of any kind in, but be used for a passage only. Waste cans and boxes stationed and properly labeled at frequent places throughout the shop, in which to deposit scrap pieces, waste, etc., will also help in a great measure to keep floors clean and tidy.

Ragged and frayed clothing has been the cause of a great many accidents, especially around revolving or rapidly moving machinery.

Numerous incidents can be quoted of a frayed sleeve being caught by a revolving part, and severe injuries and sometimes loss of life resulting. No workman should be allowed to operate or be around any moving parts with loose, torn and ragged clothing, or allowed to wear gloves.

Proper and efficient safeguarding of all machine tools, power plants and transmission also plays a very important part in the reduction of accidents in the machine shop. The proper and sufficient guarding of gears, belts, pulleys, sprockets, friction etc., is something that must be done systematically, and as far as possible, have the guarding of each class of machines standardized.

One of the greatest helps to the factory which is installing new machinery, can be obtained by the purchasing department insisting that all machines ordered, be furnished equipped with all dangerous parts properly enclosed or otherwise protected. The manufacturers of machine tools are working up more and more to the fact that efficient safeguards on their machines is one of the good selling points of the machine. Some factories now make it a point to have stamped on all letters asking for quotations on certain specified machines that "preference will be given to the machine most completely safeguarded."

In taking up the question of properly protecting the machinery in the factory it is necessary to have co-operation from every one connected with the organization. The safety inspector, may inspect, order certain parts of machines enclosed or otherwise guarded, see that his instructions are carried out, but behind him must be the hearty co-operation of all concerned to see that the guards remain in place and proper use made of the safety devices installed. Tool makers and other repair men are apt when overhauling or repairing a machine, to forget that the safety devices must be put back on the machine before it is allowed to be operated again. The watchfulness of the foreman and of the machine operator will help to overcome this difficulty, especially when the safety rules of the factory state that no machine is allowed to be operated without the safety devices supplied being in place.

When the work of safeguarding machines is first taken up extensively in any plant, it is always the old employe who objects strongest to "the new fangled ideas" as he calls them. I recall one instance in my own experience of a man, a machinist for years, who

was running a large engine lathe, which was being guarded. This man objected to the back gears being enclosed and backed up his objection with the remark that if anything were caught between the teeth of the gears, that the pressure would cause the gears to disengage, at the time illustrating this by shoving a broom handle in between the gears. I at once asked him why he didn't use his hand instead of the broom handle, and that settled the argument. The course of instruction which was being introduced into the factory at that time brought this man with many of the other older employes to realize that benefit could be derived from systematic work along these lines.

We have found it advisable to enclose all gears no matter where situated, in spite of the objection, often heard, that it is a waste of time and material to guard over a certain height above the floor. Experience has taught us that it is frequently in the most unlikely places that accidents happen. In spite of the fact that shop rules may forbid the oiling or wiping of machines while they are in motion, we find it frequently the case, that piece workers, in order to save time will follow out this dangerous practice, which has in our Factory, resulted in workmen losing fingers in gears which were eight feet from the floor, and in order to reach these, the injured man had climbed up on the table of the machine. Another instance was that in which a man's arm was badly mangled almost its entire length by reaching over gears on the top of a radial drill to adjust a counterweight while the machine was in operation. In this case it had been necessary for him, in order to reach the weight to climb on a large casting which was on the table of the machine. Such experiences show that it is never safe to make exceptions in the enclosing or otherwise protecting of gearing no matter where located.

While direct motor driven machinery is being rapidly introduced into a great many plants and replacing belt driven machines, there is still much that can be done towards protecting workmen from rapidly moving belts and pulleys. The enclosing of such belts and pulleys with a stout screen guard will do away with possibilities of accident from this source. Where the pulleys are located near the floor, the screen guard also benefits the employer as well as the employe, in that the machine itself is protected from castings being thrown or falling against it. The installation of permanent belt shifters on all tight and loose pulleys, and also one cone pulleys,

will reduce numerous accidents which are caused by employes trying to shift a belt by hand. This should be made an imperative order in all shop rules, and no machine should be allowed to be operated without such shifters.

Belts and rope drives running through floors should be enclosed to a height of at least six feet.

Shafting situated near the floor can be very easily guarded by the use of metal tubing and the same can be used to cover up key ways on ends of line shafting projecting beyond a bearing.

Couplings should never be allowed on line shafting or elsewhere with projecting bolt ends. Where such conditions exist, a sheet metal cap can be made to extend over the ends of the belts. One of the principal causes of severe and often fatal accidents connected with shafting has been the protruding set screw. We are now able to secure a variety of safety screws which leaves no excuse for the use of the old style projecting square head screw. Experience has shown that although the projecting set screw may be seemingly satisfactorily guarded, that the guards are liable to be left off after repairs are made, or become out of order between inspections so that they are not at all satisfactory.

Emery wheels should be inspected daily, and the inspector should see that all bearings are kept tight, that tool rests are kept up close to the wheel and that all guards are in position. We have found it, good practice on wheels used for grinding tools, to have a plate-glass shield in a frame fastened to the boiler-plate guard which is on every emery wheel in the plant. This glass protects the workman's eyes from flying sparks.

Elevators should be inspected regularly, to see that cables, safety stops, etc., are in proper working order, and travelling cranes should also have the same regular inspection. The inspector should keep a careful record of these inspections and have all parts which may be found out of order repaired at once. It is hardly necessary at this time to state that all elevators must be equipped with suitable gates, that counterweights be enclosed, that safety stops at floor levels be in position, alarm bells at each floor, and screen on top of the cars to prevent material falling from above, striking anyone in the car.

In the foundry, we find that the educating of the employe to the necessity of his wearing suitable clothing and shoes will do much

towards the reduction of accidents. All foundry employes whose duties bring them near molten iron should wear congress shoes, which can be very easily removed should iron be spilled upon them. Many of the worst burns which have occurred in our foundry could have been prevented by the wearing of congress shoes, instead of lace ones, which allowed the iron to lodge in between the laces. As a further protection workmen who handle molten iron should never wear torn or frayed trousers. We have for the past year carried as part of the stock in our foundry store, congress shoes which we are able to sell to the men at a low price ($1.55 per pair), and the men have been supplied from this stock. The idea has proved very successful and has helped to enforce the rule compelling the wearing of the congress shoes.

In the foundry, as in the machine shop, we again find a great necessity for the orderly condition of the floors. Gangways and aisles where men have to carry molten iron must be kept clear of anything over which a man may fall.

Tumbling barrels, jarring machines, and sand mixers must all be properly guarded and guards kept in good repair. We have found it quite practical to entirely enclose the tumbling barrels, making the hoods with a hinged door, properly counterweighted so that it can be easily opened to allow the barrels to be filled or emptied.

Special attention should be paid to all ladles to see that they are not wet or defective. Hand ladles should be equipped with shields to protect the hands, legs and feet of the workmen. Track ladles should be equipped with fenders on both ends of the track, to keep operators feet from being run over by the wheels.

Care taken to see that all vessels, into which drops are poured are thoroughly dry will prevent explosions and serious injuries.

Employers should keep in the foundry store goggles, which can be used by chippers, grinders, cupola tenders and casting cleaners to protect their eyes from chips and sparks.

In following out a general plan of accident prevention work, the more co-operation that can be secured from all employes, the better the results will be. The system followed out by Fairbanks-Morse Manufacturing Co., is patterned largely after that in force in the Illinois Steel Co. We have a central committee composed of the General Manager, Secretary, Safety Inspector and Shop Superintendents. This committee meets once a month to discuss accidents

which have occurred during the preceding month, and also methods which have been proposed or adopted by the Inspector for the prevention of similar accidents. The committee also acts on suggestions made for the betterment of working conditions, which may mean radical changes in the shop.

Each division of the factory has a committee composed of the Superintendent and his foremen, which meets once each week taking up accidents which have occurred in the department and steps which each foreman has taken to prevent similar accidents. It is constantly impressed upon every foreman that he will be held responsible for all accidents upon his floor.

Then we have the workmen's committee, on which the men are appointed to serve one month. They make daily inspections of their own floors, and weekly inspections of the shop, making suggestions for safer and better working conditions.

The safety inspector with his force of men who are constantly busy on safety devices and inspection of elevators, cranes, etc., try as far as possible to conform with all practical ideas offered by the workmen's committees. In this way the interest of every employe in the plant is kept up and it is gratifying indeed to see everyone boosting for safety.

But in spite of all precautions that may be taken, accidents are bound to happen and the minor injuries incidental to all machine shop and foundry work should be given prompt attention. Serious cases of infection can be very easily avoided by prompt and proper treatment of these injuries. We have established a plant hospital with a trained attendant, and have an imperative rule that all injuries however slight, must receive attention, and proper reports made of same.

The reporting of each accident to the safety department, and the accurate recording of these accidents will be found to be a very valuable assistance towards the reduction of accidents. Bulletin boards throughout the shop, on which are posted the records of accidents in each department as well as causes, results, and methods of prevention of the more serious ones, will do much to keep up the employes' interest in the safety work, as no department likes to head the list with the largest number of accidents for any stated period. The best results in accident prevention will be secured only when we have eternal vigilance in the works to see that unsafe

practices are discontinued, unsafe places made safe, and with this, the educating and the hearty co-operation of all concerned from the apprentice boy and the commonest laborer up to the President of the Company in this subject of industrial safety.

SAFETY AS IT IS PRACTISED IN THE WESTERN LUMBER INDUSTRY

By HART W. PALMER, General Superintendent, St. Paul and Tacoma Lumber Co., Tacoma, Washington

In general the discussion of safety engineering and safeguarding in the lumber industry is a complicated subject. In the Pacific Northwest it is particularly so, on account of the heavy and long timber manufactured.

The writer being more familiar with the conditions in the State of Washington, will speak with reference to the work as carried on there.

There are several features entering into the work in Washington, foreign to her neighboring States.

The history of the growth of lumber manufacture is peculiar. Lumber, wood and the use of wood in the construction of homes and abiding places for men is as ancient as man himself, running back so far into antiquity that it is lost, and yet, on the other hand, it is only within the last few generations that it can be said to have assumed the proportions of an industry.

When we compare the science of lumber manufacture with that of iron and steel, lumbering is so far behind that it is not in the same class. The manufacture of iron has called for scientific skill and scientific management for a long time. First, to find a deposit of iron ore that is workable, find the fluxes which are necessary, find the coal necessary for the coke and then to locate a place where all these products may be brought together, manufactured and marketed, requires careful study.

Going further, we find that in the machinery used for the more finished products of iron, greater care has been used by the manufacturer in safeguarding these machines than in those used in the production of lumber.

In the olden days a man built a mill beside water power to grind

wheat, barley and rye for food and as this would not utilize all his time or power, he added a sawmill, providing this stream passed through a belt of timber, and the logs could be floated to him. It was a small affair, requiring the labor of only a few men. The timber was cut in the winter time, brought down to the bank of the stream, and during the Spring floods was rafted to its destination. This cycle of operation continued until the adjacent timber was exhausted or such parts of it as could profitably be brought to the mill, that which could not be so procured was abandoned. As the lumber industry grew, mills were built and established for the exclusive cutting of lumber. Before establishing a mill, such timber was acquired as was possible to log and bring to the mill and manufacture at a profit, no thought whatever being given to conducting the business along scientific lines, either for the conservation of the timber itself or of its by-products, much less the consideration of the safety of employes. The idea being to secure as much profit as possible from the product, the waste being thrown to one side.

This mill as a rule, was built in a more or less hap-hazard way, a modification of the old water mill, wearing out, or more often burning up about the time the timber supply became exhausted. The whole idea being to get out timber adjacent to the mill with as much profit as possible, the mill being then abandoned.

To-day methods have changed; the lumberman, and particularly the logger in the Pacific Northwest, is working scientific problems which can no longer be worked by "rule of thumb." The close and easily available timber is practically gone, and from now on a careful survey must be made of each considerable tract before work commences. A topographical map must be made, so that it may be known which is the most economical route over which to bring the timber, the mill must be constructed along better and more advanced lines for the greater conservation of the log content.

With more scientific methods has come a more careful study of safeguarding and safety engineering, and to-day we find the newer and better designed mills doing away with belting and shafting, and using direct drive electric machines. By so doing much of the hazard is avoided.

An important factor has been injected into the work within the last few years by the passage of laws, making the inspection by

State Labor Inspectors much more rigid, consequently greater time and thought has been given to safeguarding.

Another feature entering into this problem, and one that has done more than all others as an incentive towards safeguarding, is our State Insurance plan by which the employer pays into the State fund, known as the Accident Fund, a certain percentage of his pay-roll, dependent upon the hazard of the particular occupation, and out of this fund the injured workman, and not the ambulance chaser, is paid, regardless of fault, a fixed amount according to the hazard of his occupation. This of course now becomes an item of expense which is figured the same as any other expense in our manufacturing industry. The only way to reduce this expense being not only to see that our own mill is safeguarded, but also the mills of our neighbors, for the lumber industry the same as all other industries coming under the law is grouped in classes, our class being class 10. Wood-working plants such as Shingle mills, Door factories, Excelsior and Box factories, are in class 29.

The cost of class 10, during the present year will be a little less than it was under the old Casualty Insurance rate; Class 29 being about two-thirds of that formerly charged by the Insurance Companies.

The Industrial Insurance Commission having charge of this work, is developing some very interesting statistics. Class 10, to which all saw mills and logging industries contribute has received from the time this law went into effect—October 1st, 1911, to date $266,461.72, from which fund there has been paid out for claims $167,741.35, there having been set aside as a reserve for death losses $95,777.56, remaining on hand $2,932.81.

As these funds become depleted, assessments are made to replenish them, another assessment being now due, which will increase the balance on hand to approximately $100,000.00.

In class 10, there have so far been 62 death claims approved, 33 of which necessitated pension payments, the remaining 29 burial expenses only as there were no dependents.

To go into the detail of this law would take considerable time, and this is not the occasion for so doing, but it is desired to bring out some of the data which I trust will be of interest.

Quoting from an address before the Logging Congress, held in Tacoma, July 25th, Mr. C. A. PRATT, Chairman of the Commission, states as follows:

"In the logging industry there were approximately 13,000 men at work, and up to June 20th, there has been 440 time awards, with a loss of 14,926 work days; and for disability there had been 35 awards and 22 deaths.

"In the sawmills there were approximately 18,000 men at work in that time with 763 time awards, 14,941 work days lost, with 51 disabilities and 7 deaths.

"In the shingle mills there were approximately 5,500 men employed with 221 time awards, 5,766 lost work days, with 56 disabilities and no deaths."

As all are contributing equally to this fund, it will be easily seen who is responsible for the greatest cost. Not only is the Commission keeping strict account of each class and division of a class, but it is also keeping strict account with each individual employer, and when the annual report is compiled, it will set forth exactly the accidents happening in each plant, and also the cost of compensation for these accidents, together with the amounts paid into the Accident Fund by each firm or individual.

When this report is published, there will be some very earnest self inquiry as to why injuries have been sustained and the reason for a greater cost in one factory or mill as compared with another.

Quotations are again made from the same authority.

MECHANICAL FAULT

TOTALS FOR NOVEMBER, DECEMBER AND JANUARY

	No. cases	Per cent of cases
Mechanic's fault	80	8.1
Not mechanic's fault	435	43.9
Not stated	476	48.0
Total	991	100.0
Safeguarded	384	38.7
Not Safeguarded	97	9.8
Not stated	510	51.5
Total	991	100.0

PERSONAL FAULT

Claims Carded to June 1st

March and May Figures Subject to Slight Alteration

	No. of Accidents	Per cent of total
Inherent risk	2616	80.7
Workman's fault	398	12.3
Fellow servant's fault	132	4.1
Employer's fault	69	2.1
Foreman's fault	17	0.5
Third person's fault	9	0.3
Total	3241	100.0

This work of the Industrial Insurance Commission is bound to have a very salutary effect upon the safeguarding, not only in the sawmills and logging camps, but in all hazardous work in the State of Washington. As the workman is paid, regardless of fault, and as he must be paid a fixed sum, set down by law, the only way to reduce this cost is to perfect safeguards and methods and to see that not only one mill, but all the mills are safeguarded, and that the employe maintains the utmost care in his operations.

The manufacturers of this State are highly pleased with the results accomplished by this new law and have great hopes for its future, and there is no question but that accidents and loss resulting therefrom will be reduced to a minimum, and benefit be obtained not only from a financial, but also from a social standpoint.

As to the physical features of safeguarding; little had been done prior to the passage of our Industrial laws, only a few of the larger mills carrying Accident and Liability Insurance. However, the inspections made by the Insurance Companies proved to be the initial steps to better safety methods.

The missionary work of these companies may best be pointed out by referring to the printed matter prepared for the Aetna Life Insurance Co., in their "Wood Working Safe Guards" and "Safe Guards" both by Mr. David Van Schaack.

Since the Workman's Compensation Act has been in effect, and all manufacturers are compelled to aid in the expense, the Commission

has made the subject one of general concern, and through its efficient handling much important data has been accumulated, which will assist in making Safety a scientific method of increasing the annual dividends in the Lumber Manufacturing, particularly of this State.

The attention of those interested is directed to the report of the 4th, Annual Session of the Pacific Logging Congress, also pages 26 and 27 of the September issue of the *Lumber World Review* copies of which are appended as being part of this paper.

ALLIED ASSOCIATIONS SESSION

Presiding Officer: FERD. C. SCHWEDTMAN, Chairman Committee for Accident Prevention and Workmen's Compensation, National Association of Manufacturers

"Opening Remarks."

"Means and Methods for the Prevention of Accidents in Flour Mills,"

J. C. ADDERLY, Secretary, Millers Mutual Casualty Insurance Company.

"Organization of a Co-operative Safety-Society,"

DAVID VAN SCHAACK, Aetna Life Insurance Company.

"Having the Men With You,"

ARTHUR T. MOREY, General Attorney, Commonwealth Steel Company.

"Methods for Progressive Accident Prevention Campaign,"

F. A. BARKER, Safety Engineer, National Association of Manufacturers.

"Accident Prevention in the Laundry Industry,"

E. G. TRIMBLE, Attorney and Manager, Employers' Indemnity Exchange, Representing The Laundrymen's National Association of America.

"Illinois Workmen's Compensation and Employers' Liability Act,"

G. L. AVERY, National Implement and Vehicle Association.

"Condition of Factories of Our Members,"

WM. H. DOOLITTLE, Safety Inspector, National Metal Trades Association.

"Practical Safety Lessons,"

Shown by means of Motion Pictures, Courtesy of National Association of Manufacturers.

ALLIED ASSOCIATIONS SESSION

Presiding Officer: FERD. C. SCHWEDTMAN, Chairman Committee for Accident Prevention and Workmen's Compensation, National Association of Manufacturers

The Chairman: Gentlemen, please come to order. I do not pose as a speaker, and you therefore need not expect an address from me, but what I lack in ability as a speaker, I believe I make up in sincerity of purpose in this movement. No movement merits greater, heartier work and support, than this movement for the safety of our toilers. One of the most ancient of the old philosopher, said that real charity and the best charity consisted not in giving alms, but in preventing the necessity for alms. I believe this is as true to-day as it was those many years ago, and I believe that there is more real merit in this movement for the safety of our workers than in any other movement I know of.

It is not only a humane movement, it is also a business proposition, a question of efficiency. It has been pointed out by some of our modern statisticians that in making cripples of our workmen, in afflicting them with industrial diseases of various kinds, we are wasting from four to five times as much energy and money as it would cost to prevent them, and therefore the conservation movement ought to really begin and not end in this movement for safety.

But, looking at it either from a business standpoint, or from a humane standpoint, I can assure you, as the Chairman of a special committee of the National Association of Manufacturers, that among the thousands and thousands of manufacturers in the United States that I have come in contact with, they all are more anxious to preserve the independence of their workers, the lives and limbs of their toilers, than to preserve any other phase of our national resources.

MEANS AND METHODS FOR THE PREVENTION OF ACCIDENTS IN FLOUR MILLS

J. C. ADDERLY, Secretary, Millers Mutual Casualty Insurance Company

Mr. Chairman and Gentlemen: Given a certain work to perform or an object for attainment, the successful engineer will give first consideration to the system and machinery to be used. It will be necessary, therefore, to illustrate the problems and the situation which confronted the Flour Millers in order to better explain the means and methods now being employed by them in the prevention of accidents in flour mills and their allied branches of industry, consisting of cereal mills, feed mills, grain elevators, etc.

COMMITTEE OF INVESTIGATION

The growing importance of the subject of Accident Prevention to the Millers led to the appointment of a Committee, of which I had the honor to be a member, and which Committee was instructed to thoroughly investigate the entire subject and all of its attending influences. The field of investigation covered the entire United States and Canada and consideration was given to the humane, the economic and the insurance phases of the subject.

VOLUNTARY COMPENSATION

Our investigation revealed that more than 50 per cent of the millers were, themselves, paying compensation for work accidents in varying amounts for varying periods. Many millers were paying full compensation for periods of one year or longer. Even in the liberality of the compensation payments freely made, there was injustice which was due to the fact that those employes who sustained minor injuries in which the disability was of not longer than several months' duration, received complete and full compensation, although no serious or great hardship would have obtained in the majority of these minor cases had no compensation whatever been paid; while in the serious cases where total disability or death resulted, the liberal scale of payments could not be followed and such employes or their dependents received incommensurate amounts in proportion to the seriousness of the injuries received. By far,

therefore, the greatest amount of compensation paid, went to cases where the economic necessity for compensation was the least.

Stock Company Insurance

Probably 60 per cent of our mills were carrying Employer's Liability insurance in stock insurance companies. This source of insurance indemnified only in the event of and as a result of law suits. The employer more often than not settled any claim made against him by his employe from his own funds rather than permit the odium which attaches to a damage law suit of this character, which more often than otherwise is imposed upon the employer by the insurance company, although antagonistic and detrimental to his best interests. The result was, little or no actual protection to the employer with such insurance contracts. The few awards that were recovered under such policies practically all went to the employe, who was without conscientious scruples, and who would offer himself with his exaggerated testimony of his injuries as a complacent tool to some shyster lawyer, while that employe who was loyal to his employer, and who would, under no circumstances, enter suit as a means of recovery, was unable to secure anything like a fair settlement from the insurance company.

Analysis of Premiums paid for Insurance to Stock Companies

An analysis of the expenditures of stock companies of their premium income shows approximately 60 per cent to have been consumed in the management expense and profits. Only about 20 per cent of all of the premiums paid have ever been used in the payment of claims. Of this amount probably one-half only has ever reached the hands of the injured employe. It is evident that an economic waste of 80 or 90 per cent has resulted from all of the money that has been paid by us for this insurance.

Service Rendered for Premiums paid

The term "Service" as used by the stock companies to indicate that which they have delivered to the policy holder for the premium charged consisted of three things:

(1) A legal service that has been engaged in litigating against the employes in behalf of the stock company itself rather than in the service of the employer.

(2) An inspection service which has been inefficient, impracticable and useless, so far as our line of risk is concerned.

(3) An auditing service that is solely for the benefit of the companies, and for the one purpose of seeing that they received the full amount of their premium on the check-up of pay-roll.

The Impossibility of Effective Prevention Service by Stock Companies

Giving due credit for the humane instinct that has prompted the recent steps along accident prevention lines which the higher officials of the stock companies have so far undertaken, it must be conceded that much of the money spent by them for this form of work has been a waste by reason of the very methods employed. Even though the impossibility of having trained and technical inspectors was overcome, and men could be secured who were fully acquainted with the complex and multitudinous detail of safety work as it should be applied in the hundreds of different classes of risks that are written by such companies, their work would still fail in securing the proper results. The fact that this form of insurance is for profit and has, in the past, been sold to indemnify the employer from all liability because of accidents occurring in his plant has, in itself, been destructive of proper accident prevention progress. The fact that an amount is paid by the employer to purchase freedom from liability for accidents, is not conducive to securing the additional expenditures of time or money by the employer in preventing the accident in order that the company insuring him may be able to reap a still larger profit from the business. The tendency in this respect, has been to discourage progress along prevention lines rather than to encourage it.

The business production department of all insurance companies that transact business for a profit, is the important department of the company in the eyes of the management, who must essentially look for an income before any other work can be undertaken or a profit be expected. The agent for the company is only interested in the volume of business written, for it is because of this volume, that he receives his commission income. Without producing this volume, he cannot last long in the employ of his company, and accident prevention has rarely, if ever, been mentioned except as a consummation to be wished, providing it can be attained without effort or expense. The position of inspector is secondary and naturally de-

pendent entirely upon the agent and the agent's interests. The inspector, even though he may be so remarkably informed as to be able to make an intelligent inspection of the vast variety of risks written by his company, must approach and leave the assured in such manner as not to cause the cancellation of the policy, for with the cancellation of the policy, would cease the agent's and the company's income. The company knows full well that if they should cancel the policy, some other company would immediately accept it, hence their apathy and weakness in accident prevention work. In our entire investigation, we found but one single instance where a policy had been cancelled because of an inspector's report, and the risk was immediately written on the following day by another company, larger and stronger in its standing than the first. This manner of doing business on a competitive basis and the inefficient and insincere inspection work that has been attempted is of itself self-destructive of all progress along accident prevention lines.

Unavailability and Unreliability of Present Methods

In order that intelligent prevention work might be carried out to the best advantage, reliable data and statistics should be at hand pertaining to the accidents in each class of business. This record should allow the relative degree of hazard in each part of the business operations. It should show the relative degree of hazard existing in this machine, or in that operation, in order that the more hazardous points might be given the greatest amount of attention, and these particular features studied and efficient prevention measures adopted or safeguards provided. There is a remarkable lack of information on these points. Although the stock companies have been writing this form of insurance for years, they have no figures available for our line of risk, or if they have such information, they have failed entirely to make use of it. Should they even have taken the trouble to compile this information, which is extremely doubtful, it is their own private property, and therefore, not available to public use.

Many of the states have tried to secure accident reports, but there has been no uniformity along this line, and the manner in which the records are tabulated and published are entirely at variance, which fact also renders them useless for comparative purposes.

With reference to the cost of the insurance, we found the rates to have a general tendency upward from year to year. This was especially true in those states which had passed Workmen's Compensation Laws, and in such states, advances in rate to the extent of 500 to 1,000 per cent were being made. As no actual experience was at hand on which to base their rates under such laws, it has been admitted that these enormous advances are largely guesses and the actual amount of rate necessary to carry such insurance will not be known for some years to come.

Naturally the guess has been sufficiently high to assure the business being transacted upon a profitable basis.

The situation which confronted the milling industry was analogous to that which existed thirty to thirty-five years ago, in reference to their fire insurance. At that time the loss ratio among flour mills was extremely high, and many of the stock insurance companies were refusing to write them at any rate. The average rate for insuring our property at that time was from 6 to 7 per cent. In order to meet the situation and secure reliable insurance, as well as to do intelligent prevention work in the reduction of the high loss ratio, the Millers Mutual Fire Insurance Companies were formed. The results to-day speak for themselves. The flour mill loss ratio from fire, has been reduced in a ratio of 6 to 1, and flour mill insurance to-day is carried in the millers mutual companies at an average cost of but a little more than 1 per cent.

Recommendation of Committee

In view of the conditions outlined, the report of the Committee of Investigation unanimously recommended the formation of a Millers Mutual Casualty Insurance Company as a means of providing the necessary machinery to best solve the problems at hand, mutual organization being deemed best because of the following reasons:

(1) It would specialize strictly upon the risks of our class of business, studying in detail the causes of accidents in our risks and with the tabulated results, be able to undertake intelligent and effective prevention work.

(2) There are employed in our ten thousand plants more than ten thousand technically trained and practical superintendents, or head millers, whose duties are to give direction to the employes, and to maintain the plant in safe condition and repair. Under the

guidance and direction of the "Prevention and Safety Department" of our own casualty company, these men, already in our employ, and without cost, can be made capable and efficient assistant inspectors, making daily inspections and instructing the employes under them in correct methods and safety practices. In this manner an inspection force of unequalled effectiveness and practicability can be utilized without one cent of cost.

(3) It is evident that all legislation under Compensation Laws or other special statutes, is aimed primarily at the accident itself, and that the increased liability of the employer under such laws is secondary thereto and only for the purpose of furthering the primary object. It is self-evident, therefore, that the most potent Accident Prevention work can be accomplished in the hands of those most directly interested, namely: our employes who are subject to accident, and the employers in our class of risk who are, by every reason of humanity and economy, also vitally interested. The machinery of a Millers Mutual Company can be the means of directing along efficient and approved lines all of the forces at our command.

(4) The economy in operation of mutual insurance which has been proven by the operation of our mutual fire companies during the past quarter of a century, will alone equal a saving of not less than 33⅓ per cent to policy holders of the entire premiums paid, or will allow an equal amount to be applied to prevention work which in turn will reduce the cost of the insurance by preventing accidents.

(5) The employer will have a direct and financial interest in Accident Prevention work by reason of the fact that in the mutual company, each accident prevented will result in the immediate reduction of his insurance cost to a corresponding degree, and the prevention methods are essentially more potent because of the fact that in addition to the humane and general economic reasons, we will have the actual cash reason to assist in the same direction.

Millers Mutual Casualty Insurance Company

Following the recommendations of our Committee, the Millers Mutual Casualty Insurance Company was immediately organized and placed upon a sound financial basis. The machinery of this organization is now being used to further our accident prevention work. While the organization is still comparatively young, much

valuable information has already been obtained in reference to the hazards existing in our class of business. Because of the mutual endeavor of our members and the fact that we are assuming in common, the liability of each other, plant pride is being stimulated and a degree of perfection attainable which could not be had in any other manner. As much publicity as possible is being given to the lessons which are taught by our experience, and with each accident reported, new ideas are being accumulated and given to our policy holders that will aid in the prevention of similar accidents among our other risks in the future.

The principle so often expressed among the stock companies in the past, that an occasional loss is a necessity and a stimulus to their business because of its advertising value, does not in any manner apply to the mutual company. Our advertising lies more in the fact that the loss or accident has been prevented than in that one has occurred. The heralding of good performances is an encouragement to all. We are working through our various State Millers Associations to carry out the general ideas of prevention, and by means of illustrated lectures are carrying on an efficient campaign among the employers and employes. We are organizing within each individual risk itself, the men who are employed and enlisting their aid in prevention work. We have an appointed physician for each risk who is readily available in case of accident and the injury is taken care of in the proper manner. First Aid rules are also posted at the risks in order that the injured may have efficient care until a physician can arrive.

Our line of business is essentially different from that of every other industry. Our machinery is adapted for special use and the employes have special duties to perform in connection with it. Our problems are, therefore, essentially different and require attention from those who are familiar with the special construction and purpose of our machines and in the work which they are expected to perform.

A Safety Engineering Department has been provided, and is in the hands of a competent engineer who is thoroughly familiar with our line of risk. It has been our practice to call into consultation the most competent of those in charge of our plants, and to confer further with the designers and manufacturers of our line of machinery, with a view of making safe those machines which are at the present

time in the course of manufacture and which are to appear in the future, also with a view to providing proper guards and safety devices for those machines which have been sold in the past.

Much money can be wasted in unintelligent and costly safeguarding. It will be the duty of our Engineering Department to determine what constitutes a sensible, practicable and economic guard and to provide, if possible, a standardization for the safety equipment and safety practice in our line of risk. We recognize and commend the excellent work that is being carried on by the Inspection Departments of many of the States. Through our Mutual Company and our State Millers Associations, it is our intention to work in conjunction with these State Inspection Departments to the fullest degree possible. By such co-operation in our common and mutual endeavors, more effective work can be done and a maximum of results obtained within a shorter compass of time.

Experience of Millers Mutual Casualty Co.

Many of the elements of our business which, upon first examination we had thought to have been dangerous, have proven to be of comparatively minor importance, while certain operations on comparatively insignificant machines which were considered safe, have by actual experience proven to be those which are the most dangerous.

Of all the accidents reported to the company, 93 per cent have been classed as "Avoidable" while only 7 per cent are directly traceable to the unavoidable and inherent hazards of the business, and are of such character that they could not have been foreseen or prevented. By far the greater number of avoidable accidents are due entirely to the carelessness or failure of the employe to use ordinary precaution in his work. Many of the accidents were due to the unawareness among employes who were new in their employment and did not appreciate the hazards involved. The greatest field of prevention work that can be undertaken by our company at the present time is in the thorough education and instruction of the men themselves. We are already organizing the employes in each of our establishments for this purpose. Frequent bulletins are being mailed, and instructions given to the men by the Superintendents and Head Millers in each risk. By this system of constant agitation and instruction, we hope to instill into the very habits of our employes that element of carefulness and caution

which will eventually become automatic. The degree of co-operation which we are receiving from both employers and employes in this line of work augurs well for the future. We believe that this degree of co-operation could be obtained in no other manner than through the operation of a purely mutual company, in which it is evident to all parties that they are directly receiving the benefit of the work being done. There is no question but what already results have begun to be evident and these results will continue to assist us toward the ultimate goal in the future when we may eliminate all unavoidable accidents and have left only those few which cannot be foreseen or guarded against.

While we condemn strongly the methods of the Stock Insurance Companies in the past, and believe the highest degree of perfection can only be obtained through a purely mutual organization such as we have, we do not feel that our methods are or can be the only solution of the problem. The mutual organizations which have attained success have done so by specializing upon one class of risk. They are more efficient in the work for the same reason that a physician who specializes upon certain diseases is most competent to treat such cases. The class to be insured by a mutual company must be sufficiently numerous to secure the proper insurance average, and must have a sufficient degree of enlightenment and trade co-operative spirit to allow the mutual company to efficiently perform that function which should be the first aim of all insurance,—The Prevention of the Accident or Loss.

ORGANIZATION OF A CO-OPERATIVE SAFETY SOCIETY

DAVID VAN SCHAACK, Aetna Life Insurance Company

Mr. Chairman and Gentlemen: I am going to do two things which perhaps are unexpected, but I know they will be welcome. In the first place, I am not going to talk exactly upon my subject, and in the second place, I am not going to consume anywhere near twenty minutes of time. Mr. Adderly has spoken about insurance in stock and mutual companies. I will not enter into any argument with him excepting to say this: some of the stock companies are making earnest efforts to prevent accidents so far as lies within their

power, and we are trying constantly to increase the scope and effectiveness of our work in that direction, and we also believe that under the Workmen's Compensation Laws, stock insurance will be more effective in every way. From the fact that we will have a definite basis to work upon, I believe that we can give rates and furnish service which will be satisfactory. At any rate, if we cannot do it, we will be eliminated as not fit to engage in that line of business, by the law of the survival of the fittest, and we are prepared to submit ourselves to that law and accept the consequences.

In regard to this Congress, I would like to say that I think this is one of the best movements that has ever been started, and I hope that it will result in the formation of a nucleus for spreading safety information of all kinds throughout the entire country. One of the men who came to this Congress, said in my hearing, when he saw one of the measures of accident prevention exhibited below, that if he got nothing else from this Congress, his time and money would have been well spent in getting the information on that one thing alone, and I believe that the getting together of safety men in this way will result in improving the efficiency of every one of us. I think we can all learn, not only about safety devices, but of safe methods of working, means of catching the workman, and they will catch enthusiasm from each other which they will carry out and spread farther and farther, and I want to say, and I believe I speak for all stock insurance companies, we will be very glad to support this movement in any way, both financially and in every possible form of co-operation. (Applause.)

HAVING THE MEN WITH YOU

ARTHUR T. MOREY, General Attorney, Commonwealth Steel Company

I feel honored to be one of this meeting because we are participants in a movement for better things.

While it has taken the club of the law to awaken some of us, and while our mercenary sense has spurred us on as we have become more conscious of the wasteful cost of industrial accidents,—still behind it all is the increasing spirit of truth and right-mindedness

abroad in the land. The public conscience is coming to more and more see the need of basing things on right and just relations among men—perceiving the greater need of ***man's humanity to man.*** Who can tell that this feeling of right-mindedness will expand until we are intelligent enough to need no other motive than to base things on the sanity of the brotherhood of man. And I am convinced that consequent to such a sanity would come an affluence of results in stockholders' dividends, as well as otherwise, that we now but little comprehend.

My subject is: "Having the Men With You." My subject is disposed of at the very start by the consideration of *one* thing upon which it all depends, and that is as to whether or not we are ready to recognize workmen as men. *We* know of no other way to get the men with us. The Safety Department cannot do all the work of treating the men as men. The sincerity of that condition is expressed to the men in fair wages, just treatment, and a right attention to the proprieties relating to the men's health, comfort and contentment. If these fundamental things of substance are not first forthcoming in this work, we are become "as sounding brass and a tinkling cymbal."

As to our idea of the way to treat the men. We don't believe in *giving* the men anything. We have, and are providing a good Club House and library for our men, a pleasant dining-room for our foremen and lunch room for the workmen, shower bath and locker accommodations, a dispensary, night school, lectures, etc., but in no sense are our men objects of our charity. We are not engaged in any philanthropy. Our men are not our wards,—they are our partners, our associates and our friends. The management are the friends of the workmen, and the workmen are the friends of the management. Can you estimate the value and force of having 2,000 real friends working for you? Paternalism is very distasteful to the independence of American workmen, and these better conditions in our plant are not inaugurated to *give* the men something, any more than we feel we are *giving* them edges on their tools, coal for the boilers, or the right mixture of sand in the foundry. We believe these better conditions are simply part of a properly equipped plant. We feel that these right conditions for the men are as important a part of the plant's equipment, as steam in the boilers and roofs on the buildings. Our men are the most important equipment we have.

Even in our school we do not *give* the boys an education. We invite anybody in the plant to come to school, and have arranged that any employe can get any education he needs for his life work through Correspondence Courses. Each boy must make his own contract with, and pay to the Correspondence School the cost of his Course, the company's school only furnishing the schoolroom, the routine and the instructors to assure his doing his work and mastering each step in his Course, so that he will be encouraged to persist in completing his Course, which we feel will get him a splendid result. But if he attains 90 per cent efficiency in his Course, the company reimburses him what it has cost him. While it hurts a boy to give him something for nothing, it encourages him if he earns something as the result of *having* accomplished. This also helps the boys to be thrifty and save their money, which upon their making good is returned to them the same as if they had put it into a bank. In other words, the employes at the plant are not *given* an education, but are given the opportunity to earn one. In the school work, we want the boy to take the Course that will do him the most good for his life work, even though it does not equip him to remain with our company. We could not have the boy's interest at heart to do otherwise. Enough of them will stay with the company to make a satisfactory return for the effort and expenditure, because we cannot do good without getting good.

And our object is not to get gratitude. As someone has said: "It is better to put the iron of courage into a man's soul, than tears of gratitude in his eyes." Our object is to get efficiency and output. We believe the way to proceed is to simply see that we are right-minded ourselves, have right-minded conditions in our plant, our product and our salesmanship, and to have right-minded men work for us. Having these right conditions, all other things will be added unto us.

The greatest law we are all up against, is the law of cause and effect. You cannot sow injustice, meanness, dishonesty, and selfishness, and reap good from it, any more than you can sow tares and get wheat. On this policy the Commonwealth Steel Co., has built up a dignified and successful business.

Now as to safety work itself: In approaching this subject, I speak not only as a safety man, but as a stockholder and a director in my company, concerned with efficiency and output as well as in

the reduction of accidents. I fail to see any line of demarcation between these things. Safety work and right conditions in the shop and among the men, are part and parcel of good management and good output. It is astounding that in some plants the safety department seems to be lined up against the plant organization. It seems like turning Don Quixote loose on the wind-mill. The safety man is righteously backed up by some person higher in authority, and so has to be tolerated and gotten along with by the foremen and others, but seems to be considered as very much like the pestiferous fly that attends us at our late Sunday morning nap. It would seem that the best safety work will be done when the whole company and plant organization feels it is as important a part of their work as anything else. Our own company has placed one of our directors in charge of this work. His cordial acquaintance and friendship with the plant officials, foremen and many of the men, has made a very pleasant relation, and everyone in the shop seems earnest and anxious to do everything he can to help along the good work. There should be the attitude in safety to help and not hinder the work of the shop. A great many features of safety work will really help the efficiency and output of a department, and will give a sense of security to the men that should make for better work. There is every reason why the management and the men should be heart and soul behind safety, because they can be shown clearly that it is all in their interest, and self-interest is one of the strongest human traits.

We have tried also to establish a pride in safety work by doing things well. We selected the best mechanic in our machine shop and made him foreman of safety work installation, and raised his pay. The Master Mechanic has been heart and soul in the work as well as the Plant Superintendent and Works' Manager. There has been a splendid interest taken, and what work has been done to date has been of the best quality. If safety installations have not the merit of best quality, they are liable to become a menace by themselves getting out of repair, and thus give a false security.

To make safety work entirely one of self-interest, our company has felt it wise to care for our safety work and improvements out of a special fund provided by the Board of Directors for this sole purpose. This has prevented the shop-showing in maintenance and operating costs being burdened by safety expenditures. The

shop officials have therefore felt that the safety work has not stood in the way of their getting any other appropriation they need for their shop. It has had the tendency to help rather than hurt the maintenance and operative cost sheets, bcause safety improvements are sometimes made where otherwise necessary repair or equipment expense would have been charged against the plant. This separation of the financial burden of safety work from the plant record, is presented as a specially helpful and wise feature.

We have only as yet scratched into the educational features of safety work with regard to promulgation of rules, etc. Our organization is such that when a rule is promulgated, it is strictly enforced, so we are being careful not to promulgate rules faster than our new safety conditions are ready for them. We have as yet only slightly used the important feature of having safety suggestion committees in the different departments. We feel that any safety suggestions offered that are good, should be speedily acted upon to encourage the committee. There are so many important safety improvements to make that we feel the need of getting them out of the way first before we receive less important suggestions from the committees, the failure to act upon which might mean discouragement to the men.

And now I come more specifically to a very important point in this kind of work, and that is the spirit of the organization and of the shop. Our President, Mr. Clarence H. Howard, is very strong in his ideas of organization, discipline and co-operation. He says if you put ten men around a load, and they all push against it from different points, the result is nothing. If five men pull one way and five pull oppositely, the result is still nothing. If eight men pull one way and two another, you have the value of only six men, the wages and labor of the other four being lost and wasted, and in this waste is often the difference that makes up the net profits, and the difference between the success and failure of business. But if you can get the whole ten men pulling in one direction together, you get the very highest result. This is team work that shows on the profit side of the ledger and shows in results in safety work. Our President is insistent that ours is the Commonwealth Family, and that everybody must love each other or get out. Everybody must be in cordial harmony and pull together. Because the spirit of right-mindedness and justice and fair

dealing prevails, this is not a difficult condition to maintain. The foreman and plant officials meet under cordial friendly relations in the Club House at noon for dinner, and after dinner engage in a pool tournament, etc., that makes for friendliness and good feeling.

To summarize, I cannot say more than to repeat that we believe in being right-minded ourselves, having right-minded conditions in our plant in the matter of fair wages, just treatment, and with regard to the health, comfort and convenience of our men, having right-minded conditions in our output and our salesmanship, and having right-minded men to work for us; recognizing fully the independence and worth of our workmen, and never stooping in any way to the paternalistic; all proper safety and welfare conditions being considered as a necessary part of the regular plant equipment to have in our plant organization a spirit that pulls together in everything that is projected as a company matter; putting in charge of safety work an official of the company who is in touch with the management and the men and the needs of the shop in a helpful way, and who can see the plant problem as a whole; having the highest quality of work done in all safety matters, and handling safety expenditures in a separate fund, making every condition of the safety work a help and not a burden to the plant and enlisting self-interest on the side of the work in all its phases.

I wish to take this opportunity to cordially thank the safety men throughout the country for the very cordial and hearty assistance they have uniformly been ready to give in furnishing any information, drawings or data with regard to safety work, all of which is very gratefully acknowledged by our company, and we trust we may be able to duly reciprocate.

METHODS FOR PROGRESSIVE ACCIDENT PREVENTION CAMPAIGN

F. A. Barker, Safety Engineer, National Association of Manufacturers

Mr. Chairman and Gentlemen: When I was first invited to make a few remarks at this congress, I wondered after looking over the list of speakers what I could further say in the accident prevention work. Safety has been discussed in

general, and I think you will agree with me that practically all sides have been talked about. However, I would like to tell you of the National Association of Manufacturers' proposed methods for progressive campaign on accident prevention. As you undoubtedly are aware, our Association is composed of thousands of manufacturers throughout the United States. To each of these we wish to give the best known methods for preventing accidents.

We intend to specialize on factory inspection, submitting a full confidential report if desired on exact unguarded or dangerous conditions found therein hoping to be able to suggest practical methods to remedy all such conditions. In fact, we now have on hand, or are gathering, blue prints, sketches, and photographs for a large portion of all mechanical safeguards, any or all of which are at the disposal of those who are interested in this work.

In submitting our reports to an employer on factory conditions, we intend to classify our suggestions into four forms:

First, emphasizing the most dangerous conditions and urging immediate action for same.

Second, stating conditions that are less dangerous but which should receive prompt attention.

Third, bringing the factory up to a good standard of safety.

Fourth, the equipping of factory throughout with as near perfect safeguards and accident prevention methods as possible, and the perfecting of an organization which will bring about co-operation and education.

I feel that mechanical safeguarding is well in hand. Of course, there are many dangerous conditions of machines and appliances on which we have not perfected means of perfect safeguarding, but the general feeling is that a great good can be accomplished, and the right steps are being taken in that direction.

Inasmuch as mechanical safeguarding is only one of the means, and the smaller at that, of preventing accidents, we must naturally turn and give prompt attention to the other sources, namely, organization, and education which will bring about co-operation.

Organization can, and has been successfully carried out in some of our larger factories, but how about the small factory. The employer who can not afford safety inspectors, what is he to do? He has an innumerable lot of duties himself as well as his superintendent. We might suggest and convince him that mechanical safe-

guarding is practical, proper and economical, and he may go ahead and equip his plant with the best known mechanical safeguards but without an organization or without the co-operation of the employe those guards are liable, as they often are, to be laid aside. Some speakers in this convention have suggested that strict enforcement be exercised as to the use of guards, even to the discharge of the employe who is arbitrary about using same. True, there are cases where discipline will be necessary, but do you not think the results will be far better if that employe could be made to see that the use of this guard is for his protection, he and his family being the one who lose through an accident? Now, why not try to instruct and educate the workman so that he will realize the practicability of safeguards and accident prevention work, and by so doing you receive his co-operation which is the best method for preventing accidents.

By lectures and stereopticon views, we expect to materially assist in bringing about the desired co-operation between the employer and employe. We now have on hand for this purpose about five hundred slides of various forms and we are working on others, some of which we anticipate will be a little different from any heretofore shown. These will consist of a sketch of a machine, a group or a battery as the case may be, and every danger-point of this sketch will have as far as possible the most practical method of safeguarding. These guards will be in red color, which will make the picture impressive as well as complete. The sketches will, in all probability, appear from time to time in our monthly journal, *American Industries*. Not alone do we rely upon stereopticon views for our publicity work; we have as you know moving-pictures of accident prevention lessons and methods, some of which will be shown here to-day. In addition to these we have recently purchased a moving-picture machine with which we expect to compile several short reels showing the right and wrong way of handling work, of operating and feeding machines. There is no doubt in our mind that some very good object lessons can be placed before the people in this respect.

Continual publicity work in its various forms is, I believe, one of the biggest factors in bringing about education.

We do not want to overlook the fact that co-operation extends a great deal farther than between the employer and employe. None

of us, I believe, can dispute the fact that we are all more or less dependent on one another for our material and information in the accident prevention work and our personal worth is in giving it out, not in holding it. Therefore, gentlemen, I say to you that we are willing at all times to co-operate with you or any others in this work as much as we can, asking nothing in return except that we be allowed to knock at your door and receive as we already feel assured we will the same spirit of co-operation.

ACCIDENT PREVENTION IN THE LAUNDRY INDUSTRY

E. G. Trimble, Attorney and Manager Employers' Indemnity Exchange, Representing the Laundrymen's National Association of America

At various Conventions of the Laundrymen's National Association, it developed that Employers' Liability laws, and the application of the Employers' Liability insurance, were separately, or both together, a most fruitful source of worry, dissatisfaction and friction to the employer and employe.

It was freely admitted that from a humane, economical, and legal view-point, the present system could be changed, and ought to be changed.

The National Association in 1908 appointed a committee to develop a system which fitted the requirements of the employes employed by giving better laundries, including a system of preventing injuries.

The Exchange, of which I have the honor to be the Attorney and Manager, was established by this committee, and is now working out a system of relief and prevention which has attracted national attention.

Eight hundred prominent laundries, employing more than 50,000 persons, are using the plan, and in the writer's opinion, more has been accomplished by this co-operative method on the Inter-insurance plan to get laundry owners to follow sensible suggestions for the prevention of injuries, than had been accomplished in twenty years of systematic inspections through stock liability insurance companies, issuing insurance contracts to laundries for profit to their stockholders.

The increase in the saving has not only been the inducement to

cause the laundry owner to accept sensible suggestions for safeguards, but it has been the means through which demands could be made of the manufacturers of laundry machinery, insisting that they not alone provide safety devices well known to the trade but that they invent additional safeguards.

The office of the Exchange now has an arrangement through which it furnishes the various manufacturers of laundry machinery, with a report of the various injuries that have been brought to its attention; in this way, giving the manufacturers an opportunity to know where improvements and safeguards are needed.

The inspectors of the Exchange are men who have been trained in the inspection of laundries, carrying with them the good ideas for the prevention of injuries, from one good plant to another.

One inspection is made each year, and usually an additional inspection is made of plants located in centers of population; bulletins and printed suggestions being sent from time to time.

Extractors and flat-work ironers have been the greatest source of expense in connection with the Exchange operations among the laundries. Our inspection department is requiring that all extractors must have covers.

Four years ago, very few indeed were used at all. Flat-work ironing machines are being screened in all instances where some practical difficulty does not prevent. This prevents employes reaching into the moving parts. These machines are also quite generally provided with automatic safety feed guards, which, when moved a very short distance forward, stop such machines. All tanks and heavy machinery are required to have supports with ample margin of safety. All plants must have ample exits in case of panic such as is caused by bursting of steam pipes, cry of "fire", or such other unusual conditions as might cause a hurried exit from the building.

The gears of all machines are required to be properly covered; protruding belts and set screws must always be eliminated. No machine should be operated with safeguards removed, and this is being impressed with satisfactory results upon the subscribers at the Exchange.

Four years ago it was quite the usual thing in laundries for the padding on the rolls of flat-work ironers, to be applied by the usual power used in operating the machine. Such machines are now so constructed that this clothing or padding can be ap-

plied with hand power and in most instances, this is being done by the subscriber at the Exchange, thereby preventing many of the more serious injuries that formerly occurred in laundries.

The inspection report used by the inspectors, must show the condition of floors, stairs, stair railings, exits (including fire escapes), shafting, elevator, inside machinery, ladders and gas machines. If City gas is used, report must show that cut-off is outside of building and location well known, and valve easy to operate.

Clutch pulleys are gradually being installed for the various departments where shafting is used, putting the levers for the operation of such clutch pulleys within easy reach of all employes in that department.

Dealing with such a large number of employes, it would be impossible for me to go into details in fifteen minutes, as to the injuries that have occurred during the four years the Exchange has been in operation, but our estimate is that within the past two years, fully 50 per cent of the cost of injuries prevailing previous to that time, has been saved through prevention, and by the humane treatment of employes who were hurt.

Until within the past ten days, the Exchange was able to say that not a single suit had come to trial between employer and employe; just one such suit having been brought to trial recently, and in this case (as in all others), a fair amount was offered this injured party which was refused, and it was necessary to litigate the matter, though as is usual in such cases, a judgment was given by a jury in excess of the compromise amount demanded by the Attorneys for this injured employe. All other accidents have been settled in full without suit.

Of the injuries which occurred in 1909, the first year the Exchange was in operation, every one was settled or properly closed, without expense. Of those that occurred in 1910, more than 97 per cent were settled in full, or closed, and the unsettled ones are mainly accidents involving no expense to the employer. Those that occurred in 1911, from July first, 97 and a fraction per cent (a slightly higher per cent than in 1910), were settled in full.

Without question of liability, employers are authorized, when an injury occurs, covered by Exchange contracts, to take care of a reasonable surgical expense and to pay a reasonable portion of wages during disability. This with minor injuries proves both

economical and satisfactory. With serious injuries, the question of liability has been waived except in the arguments used as in an inducement to have injured employes accept a reasonable settlement; in this way, even fatal injuries have been settled cheaply, not one now remaining open in the files of the Exchange.

It is imperative that the employers of labor, not only use every effort to prevent injuries, the small ones as well as the serious ones, but that they also provide reasonable compensation and proper surgical attention during disability.

The Lumbermen, Brewers, Ice Manufacturers, Publishers, Steam Bakeries, as well as the Laundries, are now providing themselves with Reciprocal Casualty protection on a national scale, and it is to be hoped that many other important lines of business will adopt a similar method of bringing about a better relation between the employers and injured employes.

There has been much said concerning compensation laws in various States, both for and against the idea of compensation. From practical experience, I believe that the great good to come from the laws, will be brought through drastic conditions, making the employer absolutely liable for practically every injury that occurs to an employe during the course of employment.

This will necessarily compel the employer to provide, not what has heretofore been termed a safe place to work, but a place that really is so safe that it will take a person of unusually careless habits and little judgment to get hurt in the ordinary course of employment. When this is provided, within a few years there will be a reaction on the part of law-makers, and those demanding drastic compensation or liability laws, and we will then have a compensation law in most States very similar to that now in use in British Columbia.

The British Columbia Act seems to properly care for the ignorant, poorly paid employe, and leaves the more intelligent better paid workman in a position to secure from the employer, just compensation if injured through the negligent act of the employer. This is brought about by compelling all employes to work under compensation conditions. This is accomplished by automatically putting all employers under the compensation act, without any option, and without any defences.

The compensation allowed in this Act is nominal, somewhat less

than that given by the Wisconsin law, but should the employe not desire compensation, he may elect after the injury occurs, to bring suit against the employer. The moment this is done, the employer's defences all return to him as they exist under the English common law. This, I believe, makes the employer pay the employe getting $1,000 a year or less, everything that he should have, without suit; giving the employe who gets more than that, living expenses during minor disdisability, and giving him or his heirs, the right, if it is a serious or fatal injury, to have proper compensation for the negligent act of the employer.

Of the Compensation laws as drawn in the thirteen States that now have them, not one of them will prove eventually satisfactory to the high-priced intelligent employe, and there will certainly be a reaction or limitations raised to an unreasonable amount to satisfy the demand of all employes.

Employers should demand and receive the aid of the State in compelling employes to use the safeguards provided for their protection. Some plants have successfully enforced the use of safeguards by a system of fines, compelling each employe who fails to use certain safeguards, to pay a small amount. This is one way of handling the matter, but it is to be hoped that some person will work out a better way and that the persons interested in this Safety Congress, will be successful in bringing about safeguards that will prevent the injury to and maiming of millions of American workmen, many of whom have become charges on the community because of the carelessness of employers, augmented by the carelessness of employes.

AVERY COMPANY'S PLAN UNDER THE ILLINOIS WORKMEN'S COMPENSATION AND EMPLOYERS' LIABILITY ACT

G. L. Avery, National Implement and Vehicle Association

A year ago the entire manufacturing interests of our State were in a dazed situation on account of the Illinois Workmen's Compensation and Employers' Liability Act.

"An Act to promote the general welfare of the people of this

State, by providing Compensation for accidental injuries or death suffered in the course of employment."

Lawyers seemed unable to focus a successful search light that would locate the clear course to be taken.

Inquiry was plentiful—advice equally free,—conclusions were rare.

This act no doubt was intended "To promote the general welfare of the people of the State—," but when the manufacturers came to put the test of decision necessary May 1st, they were still at sea—but fortunately the automatic clause therein saved many,—although we have learned of some who have since wished they had come in under the Act.

Our decision came as early as February, and we prepared to "go the Law one better" so to speak, we engaged the services of two competent physicians, and equipped an up-to-date dispensary to promote the general welfare of *our* immediate interests. Operations and examinations began April 1st, one month before the law went into effect.

The Avery Company was willing to abide by the law and pay for an eye, ear, finger, hand, arm, toe, foot, leg, etc., if *we* were responsible.

However, we did not propose to pay workmen for injuries received prior to May 1st, or received after May 1st if received at places *other* than while in *our* employment.

The only prevention of such a possibility was a physical examination and obtaining of a complete record of each and every man,—old employes and new applicants.

This seemed a tremendous task, but we accomplished it, two doctors, the writer, and one assistant, the doctors only giving about five hours each day to the Company work, the balance being devoted to their private practice.

During the first *two* months the Avery Company Dispensary was in operation, that is, from April 1st to June 1st, we accomplished results as follows:

Examinations: 1079 men given complete physical examination; 13 men given special eye and ear tests.

Ears cleaned: 87 men had wax removed from their ears.

Accidents: 149 injuries taken care of; 329 subsequent dressings of injuries; 13 operations; 87 eye treatments; 7 calls made by doctor at homes of injured.

Sickness: 133 minor treatments; 3 teeth and gum cases; 6 cases sent to own doctor (out of our sphere); 34 men reported but no treatment given; 3 men called on doctor at office.

Total: 1942 men handled, or about 40 men per day.

Prior to April 1st, our equipment for taking care of injured men consisted of a first aid box containing three or four different stimulants, some eye wash, arnica, liniment, carbolic acid, court plaster; and some surgeon's needles and silk and cat-gut ligatures, which as we see things to-day, would not have been used. A pair of scissors, tweezers, a wash-bowl with hot water during the winter only, and a cot-stretcher, completed the outfit.

To call a doctor meant a wait of from twenty-five minutes to an hour and one-half. To take the man down to a doctor would require as much or more time. The first aid outfit was located in a toilet-room so as to have it convenient to the wash bowl, thus making the room of doubtful sanitation for hospital use.

Contrast this with the condition since April 1st, with a completely equipped dispensary, with all the apparatus necessary for quickly and safely taking care of all injuries that may be received, including such things as operating chair, instrument table, irrigators, sterilizers, instantaneous hot and cold water, sanitary medicine and instrument cases with a full equipment of instruments and drugs necessary to the successful treating of accidents. It also contains the apparatus necessary for a complete and thorough physical examination.

We have a rest-room with cots, equipped with clean sheets, blankets, pillows, etc.

An X-ray equipment enables us to determine immediately as to character and seriousness of fractures, etc., thereby resulting in getting men back to work with the least delay.

We have our own physicians, one of whom is on hand at 6:30 A. M., when all dressings are done, and the men sent to work by 7 A. M., losing no time from work. Then follows the examinations, after which the physician leaves word where he can be found during the day, and thus we are able to have a physician on hand within ten to twenty minutes after the dispensary receives word of accident, and it frequently happens that physician is on hand before the man reaches the dispensary.

The dispensary assistants are competent to dress all minor injuries.

Our method of treatment of injuries has been somewhat similar to the course as outlined by Dr. J. E. Tuite, Chief Surgeon of the Eclipse Gas Stove Company of Rockford, Illinois, in his article published in the *Manufacturers' News* of July 25th, 1912, which article we most heartily recommend for your consideration.

Our Views on The Avery Company Plan

No matter from what view-point we look, we see the same result

A. Personal Interest	means	Closer Contact
Closer Contact	brings	Quicker Response
Quicker Response	insures	Better Care
Better Care	secures	More Contentment
More Contentment	produces	Better Work
Better Work	yields	*More Profits*
B. More Safety	means	Fewer Accidents
Fewer Accidents	results in	Less Lost Time
Less Loss Time	brings	More Steady Work
More Steady Work	produces	Increased Efficiency
Increased Efficiency	assures	Greater Output
Greater Output	yields	*More Profits*
C. Company Insurance	permits	Personal Settlement
Personal Settlement	eliminates	Friction
Friction Eliminated	avoids	Disputes
Avoided Disputes	require	No Arbitration
Arbitration found Unnecessary	Compensation	Easily Settled
Compensation Settled	prevents	Litigation
Absence of Litigation	means	*More Profits*

Our Working Plan, Employment Department

Preliminary

1. Department foremen send requisitions for help to Employment Department. (Part *1* of Requisition form.)

2. Applicants make wants known to Inquiry Clerk of Employment Department.

3. Applicants are sent to foremen for approval or rejection. (Part *2* of Requisition form.)

4. Foreman accepts or rejects applicant. (Part *3* of Requisition form.) Applicant sent back to Employment Office.

5. Applicant, if accepted, sent to waiting room No. 1 where there are provided comfortable chairs, current literature, mechanical and trade journals.

First Stage

6. Applicant signs shop rules and has past record made up by head of Employment Department. During this preliminary examination many defects may be observed which bar a man from employment, viz., attitude, bad eyes or eye, complete illiteracy, alcoholism, venereal disease, and other things of like nature.

7. Applicant sent to waiting-room No. 2 to await physical examination.

Second Stage

8. Applicant strips to waist, and is examined as to vision, height, weight, measurements, past injuries and sicknesses, and urine tests made by Dispensary assistants.

9. Applicant examined by doctors.

Third Stage

10. If applicant is accepted by physicians, he is returned to Inquiry Clerk, who then makes out pay-roll records.

11. Applicant then sent to Foremen with "Permit to Work" form from Employment Department.

12. If applicant is not successful in passing examination, he is given a full explanation as to why we cannot use him, and in case of physical disability, what to do to better his condition, and record made of case.

13. In dealing with the men, they are given to understand that they are treated as *profitable or unprofitable investments* rather than *desirables or undesirables.*

14. *No cost to workmen.*

OUR PLAN REGARDING ACCIDENTS

1. Foreman calls Dispensary, advising of accident. If of grave nature, doctor called immediately.

2. Man reports to Dispensary.

3. Taken care of *immediately*. No waiting.

4-a. Returns to work immediately if possible.

4-b. Sent home or taken home or to hospital in ambulance, if unable to return to work.

4-c. After serious injury, the employe is not allowed to return to same job on which he was injured on account of the mental hazard in connection therewith. He is allowed to return to his regular work a little later if it is found advisable.

5. Record of accident, such as Report of Surgeon, Report of Employment Department, of Injured, of Foreman, of Witnesses, etc., made out at once.

6. Records made in Statistical and Individual Treatment books.

7. Man reports next morning for further treatment of dressing of injured part, or doctor calls at residence of injured when necessary.

8. Members of Safety Committee investigate accident and report to Insurance Department and Superintendent.

9. Safety Committee sees that changes necessary are made at once in case accident is due to any fault of machinery or appliances which could be quickly remedied

10. *No cost to workmen.*

It is our *definite policy,* as we believe the goodwill of our men is a valuable asset to the business, to have the men understand that we do not desire to hide behind any technicalities in the law; that we are giving them an absolutely square deal; that we are interested in keeping them sound and healthy because we believe it is for their own good; and to this end we do nothing to antagonize the men; we have them sign no reports of their injuries which they might construe to mean that we were trying to avoid paying them compensation.

On the other hand, our physicians and dispensary employes are selected with a view of making friends with the shopmen so that they will feel an interest and have confidence in it which they otherwise can not have. We find a general response on the part of all workmen assisting us in making a rapid recovery.

We believe in treating, and do treat our men fairly and honestly, and pay them good living wages, and we expect, and in a great measure are receiving from our employes honest work and careful attention to their duties.

Our Recording Plan

Books

1. Daily record of Examinations, Accidents and Treatments kept in Statistical form.

2. Individual Treatment Record.

Forms

1. Requisition for Help; Man sent to Foreman; Approval of Foreman, and man sent back to Employment Department; Check Number Issued. (See D-)
2. Examination Folder, which is placed in vertical file and becomes man's record, other forms being pasted in folder. (D-)
3. Man passed examination. (D-)
4. Sent to foreman ready for work. (D-)
5. Accident Sheet (for Insurance Company). (D-)
6. Notice of Ability to work (for man himself). (D-)
7. Discussed man's conditions with foreman, can go to work. (D-)
8. Return to Work. (D-)
9. Transfer of Man. (D-)
10. Rate Ticket.
11. Quit Slip.
12. Department Record Card.
13. Index Record Card.
14. Treatment Slip. (D-)
15. Compensation Due. (D-)
16. Reports to State Bureau of Labor Statistics.
17. Daily report of absentees.

All records are kept in fire-proof filing cabinets and locked,—kept private. Information not passed out.

THE PHYSICIANS

Characteristics of Physicians

Should be good mixers for successful handling of men.
Good students of human nature.
Familiar with shop talk.
Broad knowledge of foreigners' mannerisms.

The Best Requirements Are

College education, practical experience.
Medical and surgical graduate.
Hospital training.
European medical training.

This type of physicians cost more, but they earn for the company more profits through quick results,—contented men,—and carefully prepared records.

AVERY COMPANY DISPENSARY

April 1, 1912 to September 30, 1912

REPORT

Week Ending	Examined	Accidents	Ears Cleaned	Later Dressings	Minor Treatments	Eye and Ear Tests	Operations	Teeth and Gums	Eyes Treated	Reported—No Treatment	Fractures	Recommended	Doctor Called at House	Called at Doctor's Office	Total
First Quarter															
April 6	169	9	7	4	8	1		2							198
April 13	144	19	20	16	10	4	2	1	11		(1)				228
April 20	131	20	16	38	10	8	1		13	1					239
April 27	169	17	1	43	20		2		9	7	(1)	2			270
May 4	128	21	15	39	9		3		4	9		4		1	233
May 11	160	10	17	38	21		2		17	3		2			270
May 18	72	20	6	36	18				14	5			3		174
May 25	53	21	1	60	19		2		14	4			1		175
June 1	53	12		55	18	1	1		5	5			2		152
June 8	44	13	2	78	12		1		17	3			1		171
June 15	54	20		88	15				31	4					212
June 22	63	24	3	68	9		1		17	1					186
June 29	69	26	3	70	15			1	16	5					205
Total	1309	232	91	633	184	14	15	4	168	47	(2)	8	7	1	2713
Second Quarter															
July 6	42	26	2	67	2				3	2			1		166
July 13	81	25	2	76	1				7	1					205
July 20	63	29	3	84	27	1				1		1	1		210
July 27	79	43	3	87	27	2				2				1	244
August 3	68	35	3	112	14					6				2	240
August 10	72	28	3	105	17					10					235
August 17	46	23	1	95	23		3			6	(1)	1			198
August 24	70	32	4	83	29				2	10					230
August 31	71	35	2	104	15				2	9	(1)				239
September 7	80	23	5	73	18				8	5					215
September 14	72	29	2	69	31			3	5	13	(1)		1		224
September 21	63	39	3	69	15			2		14			3		208
September 28	55	44	3	97	15				10	3	(1)			3	228
September 30	8	5	1	18						6					38
Total	870	416	37	1139	267	3	3	5	37	88	(4)	2	6	6	2880
Recapitulation															
1st Qtr.	1309	232	91	633	184	14	15	4	168	47	(2)	8	7	1	2713
2d Qtr.	870	416	37	1139	267	3	3	5	37	88	(4)	2	6	6	2880
Grand Total	2179	648	128	1772	451	17	18	9	205	135	(6)	10	13	8	5592

Paymaster's Report

Paymaster states that his records show that since the establishment of the Avery Company Dispensary, the pay-roll has been more regular each month, due to the fact that the men are not laying off as regularly as they used to, and that a very marked notice has been observed in the lack of lost time immediately after pay days.

Secretary Avery Relief Association

The Secretary of the Avery Relief Association advises us that since the establishment of the Avery Company Dispensary, their Association has found that they have not been obliged to pay out as much to their members on account of sickness or accident as heretofore, and that their membership fees have been reduced 50 per cent since April 1st.

Shop Superintendent's Report

Our *Superintendent* has the following to say with reference to the "Avery Plan."

"With a marked increase in shipments, with a decreased pay-roll, and with practically the same number of employes as last year, the Manufacturing Department is forced to 'sit up and take notice' that 'something' is at work to produce these results that was not in evidence last year."

"After careful consideration of the 'Something' from all sides we can draw one conclusion—*'Selected Workmen.'*"

"*'Selected Men'* means strong men, mentally and physically—men with confidence in themselves and others—men with capacity to win—efficient men. This has all been accomplished by the management of the Medical Department of this Company. That it is a good thing, results accomplished show. That it is here to stay, there can be no question, as it is the best asset the Avery Company has for manufacturing with profit."

Our Plan and Insurance Rates

We have been much interested in the article by Mr. Ferd. C. Schwedtman as published in *Manufacturers' News* of August 29th, 1912, entitled, "Co-operation to Reduce Insurance Cost".

Our insurance rates were increased from 30 cents per $100.00 pay-roll a year ago, to $3.35 under the new law.

But by the adoption of our plan and the execution thereof during

April, the Insurance Company gave us a credit of about 50 per cent, and we pay all first aid and hospital bills.

By the deductive average clause we were allowed an additional credit of 50 per cent, and we carry all losses up to $2,000.

By this means we are saving $2.50 insurance premium per $100.00 pay-roll.

Five Months' Compensation has cost us less than $100.00 against an estimated $7,250 saving in liability insurance premium.

Proposed rate	$3.35
Rate paid	85
Saving	$2.50

Pay-Roll for Factory, May 1st to October 1st $290,000.00.

The one great fault to find with the past methods has been that we have feared to spend a little money because we could not see immediate returns therefor. The above figures show that there has been economy practised by the expenditures for the above purposes effecting a very material saving.

In other words, manufacturing concerns have been *"Extravagant in their Economics"*.

Avery Company's Insurance Department

Beginning with the establishment of the Dispensary, we have built up an Insurance Department which now has charge of:

a. Employment of all men.
b. Dispensary.
c. Two doctors,—will soon have three.
d. Assistants in Dispensary.
e. Inquiry Clerk.
f. Factory messenger boys.
g. All watchmen.
h. Members of Fire Department.
i. Safety Committee.
j. Factory Insurance Inspector.

Constant care is exercised to guard against fire. "The lowest cost of insurance is found where a rigid personal responsibility is attached to the insured."

Personal interest in the physical welfare of each workman and safeguarding of machines has decreased the serious accidents, reduced the amount of lost time of employés and increased the profits

of both employe and employer, or *Making Profit by Means of an Amicable Relationship Between Capital and Labor.*

In conclusion let us frankly admit our gratitude for the spirit and intent of the Employers' Liability and Workmen's Compensation Act.

In the February 29, 1912 issue of the *Manufacturers' News,* Mr. Charles Piez, President Illinois Manufacturers' Association, states: "If the Illinois Act is faulty in a number of respects, that is to be expected of a measure that applies to an entirely new field, and that is attempting to accomplish by indirection what it cannot, because of constitutional restrictions, accomplish directly."

We do not claim for the act any certain degrees of perfection, and from our experience would most heartily desire to see corrected the following:

Clause C of Section 5 provides for a bonus compensation for disfigurements of hands or face in addition to any payments that may be made on account of loss of time, the amount of compensation so to be paid being restricted to ¼ of the death benefit payable under this act. The amount of compensation has to be agreed upon between employe and employer, or an arbitration committee appointed.

The effect of this clause is to give the injured a bonus which is not compensation based upon loss of earning power, and which is not required to be based upon compensation for damage actually sustained. It would be taken from employer and transferred to injured party arbitrarily.

This would seem to place it outside of the Police Powers of the State, and also outside the title of the Act.

Section 6 of the act should have more positive provision that the *annual* earnings be the basis of compensation in case of *death* or *permament disability;* and that the earnings *at the time of injury* be the basis of compensation for temporary disability.

Section 9 should be more specific in providing for the injured man placing himself in the care of the Company physician, and for refusing to abide by the decisions of the Company doctor.

There should be a new section of the act providing that an employe making false statements in writing regarding the dependency of others upon him for support, the rights of such dependents to receive compensation shall be defeated except as to funeral expenses.

There should be a new section providing that unle ; injured person reports an injury, no matter how superficial, at once, he cannot base any further disability compensation upon such injury.

There should be another section of the act providing that the State Factory Inspector shall frequently inspect all shops, and post his certificate as to the condition of such shop.

CONDITION OF FACTORIES OF OUR MEMBERS

MR. WILLIAM H. DOOLITTLE, Safety Inspector, National Metal Trades Association

Mr. Chairman and Gentlemen: I have only a moment, to say that the National Metal Trades Association, whose thousands of shops are scattered all over the eastern portion of the United States, are improving their conditions. We find everywhere a lack of knowledge more than a lack of interest. We find the employers everywhere willing to be shown and to add to the betterment of their plant. Everywhere we go we get letters in reply to our reports. I received one the other day saying that one company was very grateful for the suggestions and instructions received, and that our best efforts are those wherein "You tell us of our faults and help us to correct them."

A week or so ago I inspected a man's plant in Ohio, who said that he had been anxious to get the knowledge we had brought to him, and that never before in all his acquaintance with that particular machine, had he known so much as we were able to tell him in a few moments. We think the work is very satisfactory, and it is bringing results. It is not measured in figures, and we cannot tell exactly where, but we believe we are saving human life and limb, and that we are saving dollars and cents. I thank you.

MOTION PICTURE—PRACTICAL SAFETY LESSONS

Courtesy of National Association of Manufacturers

Chairman—Gentlemen: These lessons teach us, no matter how many safety devices you may have in your factory, no matter how many thousands of dollars you will expend in safety engineering in your factory, unless you have the employe with you, unless the employe works with you in the right spirit, you are foredoomed to failure in the very beginning. This picture shows you how sometimes, not by malice, but by ignorance, the older employes will disapprove accident prevention devices, and therefore become a serious factor in accidents in our factories.

IRON AND STEEL SESSION

Chairmen

HON. JAMES T. MCCLEARY, Secretary, American Iron and Steel Inst.

B. R. SHOVER, Pres. Ass'n Iron and Steel Electrical Engineers.

Vice-Chairmen

DR. THOMAS DARLINGTON, Member, Welfare Committee, Iron and Steel Inst.

C. W. PARKHURST, First Vice-Pres. Ass'n Iron and Steel Elect. Engineers.

Opening Address, "Co-operation,"
B. R. SHOVER.

"Safety in the Iron and Steel Industry,"
R. W. CAMPBELL, Attorney Illinois Steel Co.

"The Recognition of the Surgeon in Industrial Operations,"
WM. O'NEIL SHERMAN, Chief Surgeon, Carnegie Steel Co.

"Accidents to the Eye and How to Prevent Them,"
With Lantern Slides Illustrating Same.
W. H. CAMERON, American Steel Foundries.

"The Man Higher Up and What He Can Do For Industrial Betterment,"
J. B. AYERS, National Tube Company.

"Our Foreigner; What We Are Doing to Help Him Help Himself,"
R. J. YOUNG, Illinois Steel Company.

"Sanitation,"
DR. THOMAS DARLINGTON, Member, Welfare Committee, Iron and Steel Inst.

"A Vote of Thanks and Appreciation,"
Extended to Mr. Donahey of the *Cleveland Plain Dealer.*

"Report of Organization Committee,"
National Council for Industrial Safety.

IRON AND STEEL SESSION

Presiding Officers, DR. THOMAS DARLINGTON, Welfare Committee American Iron and Steel Institute. B. R. SHOVER, President Association Iron and Steel Electrical Engineers.

OPENING ADDRESS—CO-OPERATION

Gentlemen: Having an interesting program before us I will be brief. The subject assigned to me is "Co-operation" which I am sure all will agree symbolizes the *spirit* of this Congress.

It was this same spirit that prompted the A. I. and S. E. E. to extend the invitation to which you so heartily responded. It has been our "trade mark" from the first. It is the natural bond between the man and the master, the state and the nation—none high nor low can succeed without it.

This session closes THE FIRST CO-OPERATIVE SAFETY CONGRESS. Its success has exceeded our highest hopes. From it may many annual Safety Congresses grow, each greater than the other and all *"permeated," "saturated," "energized"* with CO-OPERATION.

The first paper to be persented is by R. W. CAMPBELL, Attorney for the Illinois Steel Co.

SAFETY IN THE IRON AND STEEL INDUSTRY

R. W. CAMPBELL, Attorney for the Illinois Steel Co.

Mr. Chairman and Members of the Association of Iron and Steel Electrical Engineers: It is extremely fitting, it seems to me, that your organization, gentlemen, should undertake such a co-operative congress as that which is being held here under your auspices.

In this connection I would like to pay, if I could, a fitting tribute to your profession. It seems to me that there is no profession which merits as great consideration and respect as does yours. You deal with and master the greatest force known to mankind. Electricity forms the basis of three, at least, and possibly four of the seven wonders of the world, according to the recent findings of a learned commission,—wireless, telephone, X-ray and aeroplane, the latter I include for without the electric spark for the gasoline engine, there would be no air-ship to-day.

Electric machinery, devices and light are the elements that have made possible the wonderful strides that have been made mechanically and industrially in the past decade or more. Your work is everywhere. There is no department of any industry in the work of which you do not participate. Your wires and your force are to the industrial world to-day what the arteries are to the body. In every industry you are, one might say, omnipresent and your field of influence is therefore accordingly wide, and that is why I say it is fitting that you should consider this subject of safety.

This Congress can be to you like studying at the Master's feet, and your present opportunity, as well as your present obligation and duty is very great.

I do not assume to make the key-note address of this Congress, but I venture to predict that the key-note of the Congress, as well as the basis of a large part of the discussion that will be had in the Congress, will be *organization* for accident prevention. It is my personal opinion from my own experience and such observations as I have been able to make, that organization is the essential element in any practical safety work. It is my purpose, therefore, to describe briefly to you this evening the safety organization of the Illinois Steel Company with which I happen to be connected.

To understand properly the purpose and effect of measures taken toward accident prevention, it is necessary briefly to analyze accidents. An accident, according to the Century Dictionary, is "anything that happens or begins to be without design or as an unforeseen effect; that which falls out by chance; a fortuitous event or circumstance; a happening without intentional causation." Its industrial meaning has come to be any unintentional and unforeseen happening resulting in physical injury in the course of industrial work. Accidents are of two kinds, the preventable and the non-preventable. In the preventable accidents there are two principal causes: The first, the failure of employer to provide and maintain proper working conditions and proper and efficient safeguards upon dangerous machines or appliances; the second, ignorance and carelessness on the part of the employe.

As to non-preventable accidents, the cause is of course not important, but while there may be no known method of preventing them, such accidents can still be anticipated, and the effect diminished or modified, as in the case of an emery wheel, where the serious danger may be prevented by the safety collar and guard.

These classifications have been made without reference to legal definitions and without regard to the question of legal liability or responsibility, for it might well be that some negligence or carelessness of certain employes would be the negligence of the employer so far as legal liability is concerned. In studying the problem of accident prevention, the legal phase of the situation is not important as it is the physical, mental and psychological causes which are the elements that must be considered and provided against.

It would seem, therefore, that the industrial plant which seriously takes up the problem of accident prevention must undertake first, to provide and maintain proper working conditions and proper and efficient safeguards upon dangerous machines or appliances, and, second, to educate its employes and inculcate in them habits of caution. This, it will be seen, requires a definite plan and a comprehensive organization to formulate and carry out such a plan. It is not appropriate here to enter into the details of mechanical and physical protection which can be provided in industrial plants, as these naturally vary with the character of each particular industry. That branch of safety work is, of course, of great importance but it must be conceded that no effective practical work can be done without a definite and organized effort being made. It is, therefore, my purpose to confine myself hereafter to that more important question of organization as applied to both of the branches of safety work mentioned, dealing particularly with the organization as it exists in the United States Steel Corporation and the Illinois Steel Co.

In the month of May, 1906, a meeting of the casualty managers of all the subsidiary companies of the United States Steel Corporation was called by the general solicitor of the corporation and held in New York for the purpose of discussing ways and means of better safeguarding the life and limb of the employes of the several subsidiary companies of that corporation at their several plants throughout the United States. At this meeting ideas were exchanged and many valuable suggestions offered. At a subsequent meeting in May, 1908, called for the same purpose, a further comparison of conditions and exchange of ideas was had, and it was at this time that the safety committee of the United States Steel Corporation was organized. This committee has been actively at work ever since, and is composed of the general solicitor of the United States Steel Corporation, a safety engineer having general supervision over safety matters in the Corporation, and seven members, each one

being a representative of some one of the subsidiary companies of the United States Steel Corporation who is engaged in safety work in such company. This committee meets quarterly, and acts as a clearing house for the subsidiary companies as to safety devices and measures, sending to the several companies such new ideas or improved devices as may from time to time come to its attention. It also causes to be made from time to time thorough and rigid inspections of the plants of the several subsidiary companies for dangerous conditions. Reports of any such conditions found by its inspectors are by the committee submitted to the proper officials of the company involved, together with any recommendations for the improvement of such conditions that may be named. After ample opportunity is given to such company to consider these recommendations, a return is made to the committee showing the recommendations accepted, together with a statement of objections to any that may not be accepted, with the reasons for the rejection of such recommendation. The safety committee gives these objections its further consideration and thereafter will take them up with the proper official of the company involved, either by letter or by a personal representative. It has developed that but a very small proportion of the recommendations made upon any of these inspections is objected to. The work of this committee has been very valuable in the disseminating of accident prevention information throughout the several subsidiary companies of the Corporation.

All of the subsidiary companies of the United States Steel Corporation have accident prevention departments. The organization of these different departments in the several companies is not the same. The accident prevention organization of the Illinois Steel Co. is the only one with which I am familiar and my further remarks will therefore be confined to the work of that company. To understand better the work of this organization, it might be well to state that the Illinois Steel Co. is composed of five separate and distinct plants, each one of which is in charge of an executive officer known as general superintendent, under whom is an assistant general superintendent. These executive officers are responsible to the general officials in the main office of the company in Chicago, but each plant is practically a separate entity. These plants comprise the South Works, located at South Chicago, Ill., employing

on an average of from 8,000 to 10,000 men; the Gary Works, located at Gary, Ind., employing on an average from 8,000 to 10,000 men; The Joliet Works, located at Joliet, Ill., employing on an average of from 4,000 to 5,000 men; the Milwaukee Works, located at Milwaukee, Wis., employing on an average of from 2,000 to 3,000 men; and the North Works, located in the northern part of the City of Chicago, employing on an average of from 1,000 to 2,000 men. The first four of these works or plants are engaged in the manufacture of iron and steel, while the fifth, the North Works, is engaged in fabricating these materials.

The Illinois Steel Co. has for a great many years been providing safety appliances and precautions necessary to protect its employes from the dangers incident to the use of complicated machinery and growing out of the general operating and working conditions at its various plants. In line with this general policy there has been for over 17 years at each of these plants what are called safety departments, with safety inspectors in charge thereof. It is the duty of these safety inspectors and their assistants to inspect from day to day the plants under their jurisdiction for dangerous conditions and to recommend protection and precautions, where feasible, to avoid every possible accident. Their recommendations are communicated to the superintendents of the several departments wherein the safety work should be done and as soon as possible thereafter are adopted and the necessary work performed. The safety inspectors also keep records of all accidents and deal directly with injured employes in making settlements under the relief plan now in operation.

The company some years ago found that its individual plants or works had been at various times greatly benefited by the experience of the other plants in the prevention, by safety precautions, devices or rules, of accidents, the source of which was common to all. Contemporaneously with the organization of the United States Steel Corporation safety committee, and to the end that the greatest benefit from such individual experience might be obtained, a central committee of safety was some two years and a half ago organized. This committee consists of the safety inspector and assistant general superintendent of each of its plants, together with the general attorney, who acts as chairman of the committee, his assistant in charge of accident matters in the law department, an official from the

statistical department, who acts as secretary of the committee, and a stenographer, who takes a record of the proceedings of the committee. This committee meets at the main office of the company in Chicago every two weeks for an all-day meeting. At these meetings all accidents occurring at the several plants of the company, which are any wise serious in their results, are discussed and ways and means devised for the prevention of the occurrence of similar accidents at the same or other works, wherever this is possible. General conditions are likewise examined into and if, in the observation of any of the members of the committee, any safety precautions or devices seem to be desirable or necessary, the committee considers the same and makes appropriate recommendations. The recommendations of this committee are accepted and put into force at all plants without question, unless some special circumstances make it impossible so to do.

In considering the questions that come before this committee, it does not depend solely upon the judgment of its members, but it is the practice of the committee to obtain the advice and judgment of the men at its several works, who are specialists upon the particular branch of the work that may be involved in the question under consideration. All matters that are considered, except possibly some minor ones, are first made the subject of discussion and consideration at meetings of the department superintendents at the several plants and are gone into by the members of the committee at each plant very carefully and thoroughly with the heads of the departments in which the particular situation may exist and are also gone into where possible and advisable with special committees such as of blast furnace superintendents or chief electrical engineers, etc., and the permanent and workmen's committees, which will be mentioned later. All of this is done for the purpose of obtaining the very best judgment that is available in the consideration of the more important questions that come before the committee, and to the end that when any action is taken and a recommendation made by the committee, it may be sure that the best results will be obtained. This procedure of conferring with the department heads and others at the several plants also aids much in facilitating the early installation of any device that may be decided upon, as the same are more often than not the result of the thought of the men themselves.

The safety committee, since its organization, has been and still is engaged in standardizing safety measures and devices. After careful consideration it adopts and recommends for use at all plants of the company such devices as seem to be most efficient and likely to best prevent accidents. A book of plans for devices for safety has been prepared under the direction of this committee, for the purpose of standardizing the safety appliances and precautions necessary to protect employes from the dangers incident to machinery and unsafe working conditions and to insure the provision of efficient safeguards and prop - working conditions at the time construction work is planned and machinery is installed, as well as to show the conditions to be maintained during operation. This book has been prepared in loose-leaf form so that additions or amendments may be readily made to it. The following are the principal subjects covered in that volume: Belts and Pulleys; Blast Furnaces; Boiler Houses; Charging Cars and Gantries; Flange Collars and Set Screws; Coupling Boxes, Spindles, Wabblers, Pinions, Etc.; Subway and Housings; Counter weight Guards; Trestle Walks and Railings; Rail Bed Guards; Safety Rim on Cinder Ladle; Manhole Covers; Converting Works; Safety Gate; Emery and Other Abrasive Wheels; Engine Room; Fly Wheel Guards; Railing Sockets for Movable Railings; Gear Guards; Ladders, Stairways, Platforms, Railings, Etc.; Locking Device for Levers and Valve Chains; Water Gauge Glass Guards; Mill Tables; Shafting and Coupling Guards; Cranes; Cranemen's Ladders; Walks on Crane and Runways; Hooks; Electrical Works; Signs; New Buildings; Elevators; Turn Tables; In Placing Machinery; Smoke Stacks; Guard Rails at Buildings; Open Hearths; Gas Producers; Foundries; Yards; Scaffolds. The plates in this book are reduced drawings of actual construction and are intended to be used by the engineering department as examples only. The dimensions shown are not required to be followed unless they are made obligatory in the text of the specifications which appear upon the page opposite to each plate. This descriptive matter is taken from the construction rule book, which will be mentioned later, and incorporates all of the requirements appearing in that book in an abbreviated form. On all plans of specifications for new construction or work by way of replacement it must be shown that a check has been made for safety and it has been made the

duty of superintendents of plants to see that safety devices and precautions provided for in our book of standard safety devices are complied with before machinery or plants are put into operation, and that they are thereafter maintained; no new machinery or new plant may be put into operation unless the same has been first approved for safety by the safety inspector, except upon the specific order of the general superintendent or assistant general superintendent of the plant. No machine tools may be ordered unless it has been shown that the plans and specifications thereof have been checked for safety.

This committee has also prepared with great care a book of rules respecting safety in operation. This book is gotten out in two forms. The first for the use of superintendents and foremen, printed in the English language, includes general instructions from the president of the company, regulations respecting co-operation of workmen, rules governing the construction and installation of machinery and the physical conditions to be maintained (which covers the same subjects as those mentioned before as being covered by the book of standard safety devices), and operation rules for the safety of employes. The second for the use of employes printed in the several languages spoken by the employes, is distributed to all employes of the company, who may not be superintendents or foremen, and contains the same matter as the other form except that the rules governing the construction and installation of machinery, etc., are omitted. These rule books, as stated, are placed in the hands of all of the employes of the company and each employe is required to read the same and to satisfy his foreman that he has read it and is familiar with its contents. and both the foreman and employe are also required to sign a statement to that effect upon a form provided for that purpose. All men when placed at work upon new jobs entailing any hazard at all must be fully instructed by the foreman in charge as to all dangers incident to the work, and when the foreman is satisfied that such workman understands and is aware of all such dangers, he is required to so certify to the department superintendent upon a form provided for that purpose, upon which form the workman also states that he has been instructed, knows the dangers, and will be careful of his own and others' safety. The signing of such statements practically insures against perfunctoriness in these details.

The safety committee has also prepared and had printed rules governing the use of high explosives, copies of which rules are placed in the hands of all persons having anything whatever to do with the handling of dynamite or other high explosives.

For the purpose of organizing the workmen's committee the several plants have been divided into from three to four divisions each and three workmen in each of such divisions are selected to act as a committee to look for dangerous places and consult with the men at their work to get suggestions from them as to safer methods and incidentally to sow the seeds of caution. These men serve on the committee two months and spend one day every week inspecting their divisions. When a committee is organized, all of the superintendents of the departments making up that division meet with the committee and the safety inspector. At this meeting the nature of the work is gone over with the men composing the committee, thus impressing upon them the interest taken in safety work by their superintendents. A large number of recommendations are constantly being made by these committees. It is believed that this committee work is causing the men to take more of an interest in their own and others' safety.

Department or permanent committees are provided for by the organization in each department at each of our larger plants of a committee of foremen called a permanent committee because the personnel of the committee does not change. It is the duty of this committee to make monthly inspections of their departments, see that all safety devices approved by their superintendents are installed, and investigate accidents. In making an investigation, they report how the accident occurred, what they think can be done to prevent a similar accident, whether in their opinion any one had been negligent and what discipline they think should be meted out to the negligent person. This inquiry into the alleged guilt of a party by a "jury of his peers" has a very salient effect and has done much toward reducing the number of accidents. Care is taken by the superintendents to see that the investigation made by the committee is not merely perfunctory and their reports are very satisfactory. Where the injured man himself has been careless, the committee does not overlook this fact, but lets the man understand that it does not approve of his actions.

The inspections which have been mentioned are made for the

purpose of discovering any unsafe or unguarded conditions or any safeguards already installed, which may be out of repair, or upon which any improvement may be made. In addition to the plant inspections which are made by the safety inspectors and workmen's and department committees previously mentioned, other inspections are from time to time made. Special workmen's committees are frequently selected at a plant and sent to other plants for the purpose of inspecting that plant for dangerous conditions which may come under their observation and also for the purpose of observing the precautions and devices that may have been taken and provided at that plant. This also is a very effective means of educating the workmen. The central safety committee from time to time spends a day at each of the plants, making an inspection thereof. The chairman and secretary of the safety committee also from time to time visit and inspect all of the plants. There is also an annual inspection made by all of the safety inspectors jointly of all the plants of the company. The results of all of these several inspections mentioned are reported to the central safety committee, and by it referred to the plant inspected. After the particular plant has had an opportunity to consider the recommendations thus made, it makes return to the central safety committee with regard thereto, and good cause must be shown as to why any of the recommendations made are not adopted and put into effect.

All machinery at all plants is likewise inspected with great frequency by experts skilled in each branch of the work or in the operation of the particular machine or appliance. This inspection is for defective and bad order conditions as well as safety devices. Electric crane operators, locomotive crane operators and narrow gauge or plant railroad engineers are also required to make daily reports as to the condition of the cranes or engines in their charge. All of this is done in order to keep machinery and appliances in as safe a condition as possible.

For the purpose of educating the men and inculcating habits of caution on the part of foremen and men under them, a number of different plans have been devised by our Safety Organization and are being carried out effectively through it.

Mr. Young, Manager of our Department of Safety and Relief, is to speak at a later meeting and will give you the details of these plans, which in part include:

Examination of foremen and men upon Safety Rules;
Reporting of infractions of Safety Rules;
Distribution of "Booster" Cigars for Safety Records;
Safety Bulletin Boards;
Safety Mottoes on printed forms;
Safety Calendars;
Distribution of Drinking cups, Caps, Match-boxes and other similar articles, as reward for safety records.

The United States Steel Corporation Relief Plan and Pension Plan have likewise interested the men and made them realize the sincerity of the interest of the company in their walfare, which has indirectly affected them in their habits of caution.

The gear guard, the railed walk and safeguards, in general, are important, yet by far the most important element in the successful prevention of accidents is the elimination of carelessness. It is this element in the cause of accidents which is being fought the hardest in the Illinois Steel Co. Constant education and instruction and the strongest of disciplinarian measures are the only weapons available and it has been for this purpose that the various methods previously mentioned for securing the co-operation of the workmen have been put into effect. Eternal viglance is the price of safety and organize, protect, educate and inculcate habits of caution must be the creed of every industrial plant which seeks to do effective work in accident prevention.

We all have, therefore, recognized the fact that in every trade or industry, either by reason of carelessness or on account of the trade risk, accidents are bound to happen and injuries to follow. The Illinois Steel Co. has therefore made ample provision for the care of its men when injured. At its South Works and Gary Works, well equipped hospitals have been built, located on the plant, which are in charge of an efficient corps of graduate doctors. At its other plants emergency rooms or dispensaries are provided. At Joliet Works graduate doctors are on duty night and day at its dispensary, and at Milwaukee and North Works at their dispensaries during the day, with doctors within easy reach of the plant at night.

At all plants stretchers and hand ambulances are located at convenient points and at Gary and Joliet Works horse-drawn ambulances are used to bring the injured men to the hospital or

dispensary. At the plants where dispensaries only are located, public hospitals near the works are used for the care of those more seriously injured, or men are cared for in their own homes. All such surgical attendance and hospital care is furnished by the company without cost or expense to the injured employe. Oxygen tanks and Draeger helmets are also located at points about the plant for resuscitation and rescue work.

It is immaterial, gentlemen, whether or no there is any economy or reduction of cost in safety work. We do know, however, that such a campaign has resulted in several industries and railroads in a reduction of from fifty to sixty-six and two-thirds per cent. in accidents. Such a saving of life and limb is indeed worth while even though there be no saving in costs.

In this safety movement I do not wish you to understand that I believe the Illinois Steel Company has been alone. The General Electric Company, Remington Typewriter Company, International Harvester Company and Northwestern Railroad Company, New York Central Lines, Baltimore & Ohio Railroad Company, Elgin, Joliet & Eastern Railroad Company and a number of other large industries and railroads, together with the Federal and State governments, as well as numerous industrial associations, such as the National Association of Manufacturers, are all seriously engaged upon a strenuous campaign for safety, the results of which have been marvelous.

If I were a preacher, I would have selected a text. It would have been a portion of the 9th verse of the 4th Chapter of the Book of Genesis: "Am I my brother's keeper?" "Am I my brother's keeper?" That is a question which has rung down through all the ages. The march of progress and civilization has gone hand in hand with the humanization of the world, until to-day when we believe we have reached a higher point of civilization than ever before we find the question of our text: "Am I my brother's keeper?" answered more affirmatively than ever before in the world's history.

Shakespeare has said that there are "Sermons in stones and good in everything." How much more though are there sermons in human deeds and human activities? The time is too short

to enumerate the various forms that this answer to our question has taken in human deeds and in human activities. Publicly, through public bureaus and protective legislation, privately, through organized philanthropies, charities and settlement work, as well as through personal efforts along the lines of individual helpfulness, the answer comes the same.

In times of great calamities, the answer rings up to Heaven. On the evening of the 4th day after the commencement of the Great San Francisco fire, I stood at the railway station in Oakland, across the bay from the devastated city, the glowing embers still lighted up the skies, yet I counted hundreds upon hundreds of freight cars laden with relief supplies pour by, some coming from villages not even on the map. Returning to the east a few days later, there was not a station along the line at which trains stopped, where free food and clothing of all sorts was not offered to emigrating refugees. No one can ever again make me believe that humanity has no interest in humanity.

I would point also to the Safety and Welfare work of the great industrial concerns of this country similar to that which I have described as in vogue in the Illinois Steel Company, all of which is but another form of the answer to our question.

In closing I would, therefore, urge upon you the careful and conscientious studying of every phase of the subject, to the end that when you return to your daily labors you will be filled with new ideas, new plans and new schemes for safety organization and work in your own plants, so that at night you may be satisfied with the answer that your day's safety work makes for you to the question which you may ask yourself,—"Am I my brother's keeper?"

THE RECOGNITION OF THE SURGEON IN INDUSTRIAL OPERATIONS

Wm. O'Neil Sherman, Chief Surgeon, Carnegie Steel Co.

We are passing through a most remarkable industrial development, which has been under way for more than twenty-five years, and seems to be gaining impetus as time goes on; this industrial awakening of the World carries with it manifold changes in environ-

ment that seem to present themselves to us for consideration in some new phase every day. The great changes that have taken place during the conversion of our own country, in so short a time, from a comparatively unimportant agricultural community into one of the leading manufacturing nations of the Earth, have produced conditions which were of course heretofore unknown to the race. The quick expansion and development of railroads in the last quarter of the past century, almost coincidently with a similar development of the mills, mines and factories, has kept constantly ahead of us a new set of problems for solution, and while social and economic reform in the operation of our large industries has manifested itself in many ways from time to time, it is not until quite recently that the conservation of workmen has been regarded as a subject of vital importance to the employer.

Employers are just now beginning to appreciate the tremendous industrial value of a systematic preservation of human life and health, and decided progress is already being made by the introduction of machinery guards, warning devices and other precautionary measures, designed to prevent injuries to persons as far as possible, and failing in that, to minimize the number of such accidents and the seriousness thereof. While the advent of the "Safety Organization" is playing an important part in the general uplift of working conditions on railroads and in other hazardous employments, and will, doubtless, materially reduce the number of accidents, we may not even hope to attain a stage where the heavy machinery and equipment of to-day can be made proof against bodily injury, or as someone has rather tersely expressed it—"fool proof." From the present outlook, we feel constrained to believe that there will always occur a certain number of accidents resulting from ignorance, carelessness and other conditions over which the employer can exercise no reasonable control.

Where the safety and preventive measures have not been entirely effective, the physician or surgeon steps in; he has heretofore been regarded with somewhat negligible consideration in most industrial organizations—to be consulted only where extreme conditions demanded the employment of his services. But now the economic value of safety appliances, which is becoming so apparent to every one, is exerting an educational influence upon employers, many of whom have already seen the further advantage that may be attained

by the addition of a surgical force to their organizations. My own opinion is, that every large industrial enterprise should have a properly equipped emergency hospital, together with such surgeons, nurses and other attendants as conditions may seem to warrant.

While the surroundings and the character of the employment will always, to a certain extent, determine the number of injuries, the results of these injuries can be greatly reduced in seriousness by prompt and skillful treatment; the failure to properly administer first aid, and the subsequent lack of efficient surgical attention, has in the past added to the death list many whose lives might have been saved, and has steadily recruited the army of the maimed and crippled, with which the streets of our larger cities are so familiar. Public sentiment on this subject is becoming aroused, and, perhaps, quite properly, is manifesting itself in a demand for legislation to compel employers to provide efficient surgical care for injured workmen.

I might emphasize here, that efficiency in surgical attention, as you doubtless know, is the key-note, the fate of the injured frequently depending wholly upon the individual who applies the first dressing. It will thus be seen that to get the best results, there should be a complete surgical organization, and this organization should work in harmony with officers and subordinates, as the co-operation of all is quite essential to the success of the movement. Where the number of accidents is large, a chief surgeon should be in responsible charge of the work, and in surgical matters he should not be subjected to the handicap of the restrictions of well meaning lay officials, who sometimes have decided opinions of their own upon subjects entirely foreign to them.

The primary object of first aid is to furnish an aseptic dressing that will prevent infection of the wound, and its further activities are to supervise the removal of the injured to home or hospital, and to render appropriate assistance in cases of shock, heat prostration, drowning, alcoholism, gas poisoning, freezing, etc. The American Red Cross Society's abridged textbook on first aid is a most excellent work, and may be used to good advantage by instructors in first aid as a standard work on this subject. This book treats the subject in simple language, it is thoroughly practical, and probably contains all the information necessary for the intelligent instruction of first aid corps.

When we consider that there are between thirty and thirty-five thousand deaths per year in the United States from industrial accidents alone, and over two million such accidents that do not result fatally, it will be seen that much good can be wrought by a systematic campaign of first aid instruction, to say nothing of what might be added when the first aid movement has been supplemented by fully organized surgical attention. It would be folly to attempt to approximate the number of lives and limbs that might thus be saved every year, but with such a field for our operations it is quite easy to imagine that the benefits would be tremendous.

We might as well take for granted that practically all open wounds are infected, and when not properly treated will usually result in pus formation. In former times, when the necessity for immediate and scientific aid was nowhere recognized, the percentage of infected wounds ranged from ten to seventy-five. During the past two years, the writer has been afforded a wide opportunity to observe this particular phase of the situation, and our experience under the methods that now obtain has been highly gratifying. We feel no hesitancy in stating that infection is entirely unnecessary, and is due altogether in most cases to ignorance or to failure to have at hand proper equipment for rendering the necessary treatment. In a series of more than 40,000 cases that have come under the writer's personal observation in the course of two years, the great majority of which were minor injuries, infections averaged one one hundredth of one per cent, or one in a thousand cases, and even this percentage rate is too high. These figures, to the uninitiated, may be startling, but they are nevertheless correct and are quoted merely to confirm our views previously expressed. During the same period there also came under our observation 5,500 cases of the removal of foreign substances from the eye by the surgeons or other attendants at the emergency hospitals. Formerly, the majority of operations of this nature were performed by unskilled fellow workmen under the most unfavorable conditions, and the result was many cases of corneal ulcer, not infrequently followed by defective vision, and in some cases by loss of sight. All of these complications were wholly unnecessary. It takes three times as long on an average for an infected wound to heal as a non-infected wound; hence the time required for healing an infected wound involves a direct material loss to the injured, on

account of the enforced delay in the resumption of his employment, to say nothing of the serious complications that may arise from such an infection.

First aid stations and stretcher boxes should of course be located at the most convenient and accessible points at large work shops. A separate building if practicable, and if not, a separate room should be provided for emergency hospital purposes, and here the patients are to be prepared for movement to final designation—either home or hospital as the case may be. Much harm has been done by attempts on the part of surgeons to explore wounds, and reduce fractures at the scene of the accident, where the surroundings are such that surgical cleanliness is not possible, and this practice cannot be too strongly condemned. In fact, it is nothing short of criminal attempt to probe or unnecessarily handle these wounds under the unfavorable conditions that usually exist at the place of accident; the immediate indications should of course be met promptly, but further treatment should be deferred until more favorable surroundings are secured.

As quickly as possible after first aid has been rendered at the emergency hospital, the patient, if surgical attention is required, should be moved to the general hospital, to be attended by the surgeon regularly retained by the employer, who is preferably a member of the staff of the general hospital. There is no reason why the employers of large numbers of men should accept, or expect to receive, the services given by staff hospital surgeons without financial compensation. It is unjust to the staff surgeon to ask that services of this nature be rendered gratis, and furthermore, it is unfair to the injured to make him an object of charity. The employer is morally bound to afford appropriate assistance in such circumstances and he should not ask the community nor the medical profession to assume the obligation for him. A changing sentiment, however, is apparent in this and other kindred directions, as evidenced by recent legislation on Employers' liability, insurance laws, old age pensions and the like—not only in the United States, but in Germany, France, England and other European States.

The somewhat common practice among employers of submitting their surgical work to competitive bidding is also to be condemned. It will be found in the end to be most economic, and most satisfactory to all concerned, to select a man from among the best

qualified surgeons in the community, and he should of course be paid commensurately to the service rendered, either by fee or salary. There is probably no service so dear as that of a cheap, underpaid doctor.

Somewhat in line with the work of the surgeon, and closely related thereto, is the work of sanitation in manufacturing plants, and here he, or some other expert in such matters, can render valuable assistance, not only in improving working conditions, but in thereby helping to educate the workmen to the value of sanitary home life, both of which are factors well worth considering in any effort to raise the efficiency of a manufacturing organization.

Before closing, I will quote from the eminent Chicago surgeon, Dr. John B. Murphy, to the President of a large manufacturing corporation, as follows:

"I have a true appreciation of the significance of proper first aid treatment in all cases of surgical injury in manufacturing works. The first aid treatment has practically control over the final outcome of these cases. To give you an idea of the significance of first aid treatment, I will say, in my observation in a ten years' experience in the Alexion Brothers Hospital, which has one of the largest emergency practices of any hospital in the United States, that if the patient were brought directly from the shop with only waste put on the wounds without a previous medical examination, 83% of these cases recovered without suppuration or complication, while of those who were examined or dressed in a semi-medical way under the unusual conditions of the shop, 95% suppurated. Suppuration cases require three and a half times as long a stay in the hospital as the non-suppurating cases. The number of amputations and excisions and stiff joints resulting from the suppurating cases was very great, while in the non-suppurating cases, it was practically nothing. It becomes a regular question on the admission of the patient, have you, or have you not, been examined by a doctor, and in case he had not, the chances were considered good for a non-suppuration. This is not intended as a reflection upon the profession, but an endeavor by the profession to do work under such unfavorable circumstances as the shops afford, in place of applying an emergency dressing and sending the patient where every aseptic and antiseptic precaution would be taken. The men in a short time learn to apply the emergency dressing in a safe and thorough

manner. This was amply demonstrated in the late war with Cuba and in the Russo-Japanese war. I feel that from a humanitarian standpoint the saving in suffering to the injured, the reduction in the number of amputations and the diminution in the number of impaired and crippled limbs, as well as the great economic advantage which it will have, should appeal to the organization of all large corporations."

The "pioneering" in this field for the present is being left to some of the larger corporations, but the stupendous benefit that is already apparent from their operations, is beginning to act as a leaven among the smaller manufacturing interests, and in the near future a general improvement may be expected in the present deplorable conditions. This work, when its value has become fully appreciated will go a long way, not only towards relief of much suffering, but to the reduction of the number of personal injury claims and embarrassing law suits. The removal of such friction points as these between employer and employed helps along the movement to encourage reciprocal sympathy, helps to allay the now popular outcry and prejudice against large corporations, and will contribute its share to the inhibition of hasty, drastic and ill advised legislation.

DISCUSSION

Mr. Morey: Mr. Chairman, I think that paper is a pretty important paper on some points that have been bothering us. There has been some objection to the need of a dispensary right in the plant. Do I understand that the doctor says that when there is proper first aid given, that there is never any occasion for infection?

Dr. Sherman: No, there are exceptions to every rule. But if proper first aid is given the percentage of infection can be reduced down to a minimum, and I would say that minimum would be one or two in a thousand cases.

Mr. Morey: That is very interesting to me.

Dr. Sherman: Those are the statistics of 40,000 cases we have had during the last 2 years.

ACCIDENTS TO THE EYE AND HOW TO PREVENT THEM

WITH LANTERN SLIDES ILLUSTRATING SAME

W. H. CAMERON, American Steel Foundries

Loss of sight minimizes a workman's efficiency. He may lose his arm or his leg and still be able to work, but he is absolutely dependable upon his eyesight to earn his living. Therefore, the preservation of a workman's eyesight means saving his working life.

A large percentage of accidents to eyes in industries are preventable. There are, of course, accidents which are not preventable, but these form only a small part of the whole. A man who does not see well about his work not only runs exceptional risk of accident to himself, and his fellow employes, but he also works at considerable diminished efficiency. Workmen should not be allowed to work at hazardous occupations if they have poor eyesight. When men learn that they must have good eyesight to secure employment, they will learn to take care of their eyes.

Much work can be done of great social value, and of no small economic imoprtance, by intelligent examination of the general conditions in which men work as regards vision; the examination of all workmen for defective vision and diseases of the eye, and the refusal to employ these men who are visually incapacitated.

Proper lighting is the first essential in the conservation of eyesight, but there are other dangers in the majority of industries, such as the careless use of emery wheels; flying metal chips; burns and other comparatively obvious eye accidents.

There are two essentials in the guarding of eyes; first, protection from foreign bodies reaching the eyes, and, second, and this is very important, protection from other workmen. The first consists mainly in the wearing of suitable goggles; and the second, the use of screens and instructing careless workmen to protect themselves. That this is not a small task has been proved by the experience of one Steel Corporation who testifies to two hundred and fifty men who have lost their eyesight by permitting other workmen to remove foreign bodies from their eyes. The loss of sight in these cases results from perforation of the cornea; the transmission of infection by finger nails, or other means, and corneal ulcers forming large scars as a result. The experience

of this one Company teaches that workmen should be instructed never to allow anyone but a doctor to remove a particle from the eye.

There are also two factors to the spectacle problem; first, suitable spectacles, and, second, having them worn. The most important feature of the spectacles is the lenses; if made of glass they must be strong enough to withstand a heavy blow. The glasses must also have steel screens and be comfortable to the wearer. The spectacle to be reproduced on the screen has been evolved to meet the eye hazards in large industrial shops, and particularly steel foundries. They weight about one ounce, including such accessories as rubber tubes on the temple and cork inlays on the nose pieces. These spectacles can be made to fit any workmen by the use of a pair of pliers. An anti-sweat-pencil (made principally of paraffin) if rubbed on both sides of the lenses and polished with a cloth cleaner, will keep the glasses free from moisture from three to five hours. The complete outfit, including a spectacle case, costs eighty cents.

A great many other styles of spectacles are sold for the same purpose, but the writer does not know of a spectacle better adapted to the purpose than this one.

There are many classes of workmen who should wear spectacles to protect their eyes from injury from flying pieces of metal. Among this group of men are machinists, sledgers, floggers, chippers, and men working about scrap beakers and crushing machinery. They are also recommended for workmen handling hot babbit metal. Explosions have been known to scatter the metal into the eyes of workmen. Special lenses are suggested for ladlemen in steel works made of a combination Pugh and white glass. By this means the men secure a double use of the glasses; they can look at the metal through the blue glass and use the lower part, made of white glass, in walking about the shop. Men employed about electric welders should wear a helmet to cover the head. These helmets are made of aluminum or tin, and are so light that the men are glad to wear them. The opening in the helmet to see through is covered by a set of four glasses, two red and two blue, arranged in the order of one blue and one red. This arrangement provides a quadruple protection against the intense rays of light. The arc welders' room should be isolated. The roof of this room will necessarily have to be open, and, if, for instance, overhead

cranes are allowed to pass in this vicinity the cranemen will have their eyes affected in the same way as the welder without a helmet. Workmen who are afflicted with eye troubles, such as nearsightedness, should have special lenses made and fitted to the safety spectacles to protect their sight and make the spectacles comfortable.

To minimize labor troubles the workmen must be educated when necessary to wear spectacles. Objections will be made to any protection on the ground that it interferes with freedom to work. If an inspector or overseer devotes all of his time to this process of education for at least two or three months, the spectacle habit will become fixed, and a sufficient number of accidents will have been avoided to demonstrate to the most stubborn workman the absolute necessity of this protection. The men will even refuse to work without spectacles.

In one large Steel Foundry where these spectacles have been in use for about two years, forty-eight pairs of spectacles were collected in the month of August, with lenses broken by flying pieces of steel, and two hundred and eighty-seven pairs have been collected among the seven foundries of this company over a period of six months.

The universal insistence on the use of spectacles by the workmen referred to will lessen the burden of the employer. When a workman realizes that he cannot secure a job in the dangerous trades if he refuses to wear spectacles, the habit will soon become fixed and every employer will be benefited. There will also be a considerable diminution of one-eyed men in the country.

The cost of the spectacles is infinitely less than paying compensation for the loss of eyes.

THE MAN HIGHER UP AND WHAT HE CAN DO FOR INDUSTRIAL BETTERMENT

J. B. Ayers, National Tube Company

Mr. Ayers: Mr. Chairman and Gentlemen of this Convention: I wish to take this occasion to express my appreciation of the meetings that have been held, and to congratulate the Association of Iron and Steel Electrical Engineers for having launched this Safety Congress as their offspring, and also congratulate them on

having reached the age of puberty at so early a date. Now that their progeny has been placed before the world; I trust that they may live to see their descendants even to the 3rd and 4th generation.

My subject is rather an extensive one, and in the time of 20 minutes given to me I hardly feel that I am qualified to deal with it. We hear so much in this day, of the man higher up, both in the field of virtue and that of vice. We however are dealing with the field of virtue.

In this Safety Movement it is the backing and enthusiasm of the *man higher up,* that has paved the way for the splendid work that has been done along this line during the past few years. The best work has been done in those plants whose manager said "this plant stands behind the motto "SAFETY FIRST," the plant safety record, as well as the tonnage sheet, simply reflects the plant organization which in itself is a reflection of its management. To be sure Mr. Young will tell us that we can not run our safety organization to its highest efficiency without the assistance of the man in the lower ranks; there will be argument; we admit it. However, how far could he go with his work of education, his work of prevention, his new methods, his catchy signs, etc, etc., without the support of the *"Front Office," The Man Higher Up?* without him our's would be a *lagging power factor.*

I of course, am a corporation man, and I have seen the advent of the Steel Age, and all that it has brought. Having been reared where the primitive methods were used, and where it was simply manual labor, I have seen great changes in these later years, changes for the better, old methods replaced by new ones—always an improvement for the workman, something to lessen his daily task; brains to the rescue of brawn. In the old days men went out all hours of the day and night, thinking that they could not work without their beer and whiskey. That practice has stopped, and with it many accidents I am sure. These changes have come no doubt in part, because they have increased the output, but not entirely for this reason. Few superintendents have I met that look to tonnage alone. We hear in this day and age so much about the man's motive and what prompts him to do these things, that it is a sinister one; I don't think so. I believe there is real rich red blood of human character coursing through the veins of the man higher up to-day, and that it is from a

sense of feeling for his fellow men that he is prompted to do this very work that is being done. I believe it is the Law of God and Justice that prompts the man higher up to do these things, not the civil law.

These vast sums of money some 5½ millions spent by the corporation last year for the uplift, protection and welfare of their men—this money was not spent from a sense of profit alone. It was done from the heart. The order goes forth from The Man *Highest* Up, and comes to those down below, and is carried to a conclusion. Take the Company that I serve. We have a man as president, with a heart that is large, humane, with a disposition to do for the betterment of his fellow man that cannot be excelled. His wish is that this spirit permeate all of the subordinate bodies of our subsidiary company, it does, he *wins* it, where the power of his position could compel it, *he wins it*.

Some one has said *"Safety Begins at the Top."* I believe he was right. With the inspiration and backing from *The Man Higher Up*, let us carry the good word *"Safety First"* as they have done at Joliet even to the embryo workman, the child at school.

OUR FOREIGNER; WHAT ARE WE DOING TO HELP HIM HELP HIMSELF

R. J. Young, Illinois Steel Company

Mr. Chairman and Gentlemen: About 60% of the employes throughout the corporation are foreigners, and that necessitates using methods other than we could use if they were all English speaking. The burden practically of all the papers I have had the pleasure of hearing read at this Safety Congress, has dwelt with the utmost strength upon *Organization* and the necessity of *training* our men to be careful. This has also been our own experience. We have the organized safety committees in the corporation and also in the subsidiary companies, which I will not take the time to describe, as they have been thoroughly described in other papers with which you are familiar. We use, however, a *Workmen's Safety Committee*, as one means of reaching the foreigner. Sometimes these committees are composed

entirely of foreign speaking men; a committee composed of all Polish men, for instance. When this committee is formed, the superintendents of these men meet with them and with the safety inspectors, and go over with them the necessity of being careful in their work; emphasizing the fact that we want them to talk with the other men of their nationality, and suggest if possible, some safer *method* of doing the work, incidentally *sowing seeds of caution* among the men of their nationality. We have found this a very effective means of reaching the foreigner. All large corporations and companies now, I think, have adopted some plan of printing rule books in foreign languages. We use this as another method of reaching the foreigner and have gone so far as to go to their priests and ministers, and furnish them with copies of these books, asking them to make them subjects of special discussion at their meetings and in their churches. We found this a very effective means of reaching them. At our Joliet plant for some months we have been experimenting. An interpreter, an outside man, calls upon every foreign workman after he has been in the employ of the company for 2 or 3 days. The employment slip which is taken up by the timekeeper, is turned over to the safety inspector, who sends this foreign interpreter to talk with the foreign workman and see if he has been thoroughly instructed in the dangers of his work; "has the foreman told him the best way of doing the work, and avoiding the hazards?" "Has he been told that there is a doctor at the plant where he can receive medical attendance without charge?" "Has it been impressed upon him the necessity of taking care of his accident?" "Does he realize that the injury, no matter how slight, may, if not cared for, result in blood poisoning, a serious result, possibly death?" This experiment is *bearing fruit*. It checks your foreman, your organization, as well as the man. If a man comes to the plant of the steel corporation, he is confronted by a sign in the employment bureau. (This idea was adopted from the National Tube Co.) It is called to his attention the fact that he must be willing to look out for his own and others safety or *"move on."* In all the gate entrances we have adopted the plan of putting up an illuminated sign, displayed first in the English language, and then displayed in the different foreign languages. They are a continual reminder that to a large extent, the safety

of themselves and other men depends upon precaution. When a man is employed, after he has been in the service not to exceed 7 days, an instruction card is filled out. The man signs a card to the effect that he has been told by the foreman how to perform the duties of his particular job. He is an oiler, for instance, and the dangerous points of his machines are explained to him, and how he is to keep from getting hurt. The card also acts as a receipt for the book of rules, and the man who "breaks him in" to that particular job, also signs to the effect that he has given him the necessary instruction. Then the foreman is required to go on record to the effect that he had told the man of the particular dangers; that the man has the book of rules, and he has examined him, asking him several qustions with reference to the rules, and is satisfied that he understands them. There must be a follow-up system to see that the rule book is used efficiently, or they would not be of any value. Throughout our plants we also have along the main roadways, signs, again reminding the men of the necessity of observing the safety rules, and being careful of their own and others safety, to report anyone whose actions are liable to cause injury. Sometimes we have places where we want to put a sign that will act quickly, a sign that is printed in a universal tongue. This sign has been largely adopted now throughout the corporation. It is something that all the men can understand, whether they can read print or not,—a symbol of danger that even the foreigner can comprehend. Signs such as these, are placed on dangerous electrical equipment, for example: All of our signs are made of enameled steel. We find that they are not only more spectacular, but eventually are cheaper. At every department and at every plant entrance, we have what are called safety bulletins. Upon these bulletins we put lists of departments that are successful in keeping their accidents below a certain percentage for a month. We also subscribe to newspaper clipping bureaus and put on these boards accidents that are reported in newspapers. Alongside of them we place photographs of safety devices which prevent such accidents, or copies of rules which if they had been observed, would have prevented the accident. We have what we call a comparative chart, which we put on this bulletin board to show the plant's average of accidents. We also issue departmental averages month by month. We are giving at Joliet safety tokens to the men.

You probably saw some of the samples in the exhibition room. If the department can keep their accidents down so that no man is off longer than 7 days, every man in that department is given something. One month we give them sanitary drinking cups, the next Safety caps, with "Safety First" printed on the front and back of the cap. This is not only good for the men but for everybody. It continually advertises safety. You see these caps bobbing around all over the plant, and it keeps the idea before the men all the time.

A safety calendar was gotten out by our Joliet plant for 1911. Every man in a department was given one of these calendars by his superintendent, and a short talk on safety. He was asked to take it home and hang it up where it would be continually reminding him and his family of this subject. On the bottom of the monthly "tabs" are printed rules and safety precepts. In addition to giving them to every workman we gave them to all of the schools in Joliet. We hung one up in every schoolroom. Some months after the move had been started, I was in Joliet, and talked with the principals of the schools and the teachers, and they were very enthusiastic over this idea. They thought it was one of the best means we have adopted to get the idea into the homes of the people. One teacher told me she held examinations of her pupils every month, as to what the rules were at the bottom of the monthly tab, and practically all of the pupils were able to answer perfectly what these rules were. Another instance came to my attention showing how this carries the idea into the home, is where a little chap was reading the rule at the bottom of one of these tabs, which says that men shall not climb the ladder without the free use of both hands; that if he has material to hoist he should use a rope. After reading this he turned to his father and said, "Do you do that Pop?" There isn't anything that will bring it home stronger to "Pop" than the thought that if he does not "play safe" he may cause hardship and sorrow to this little chap. When he goes to work he will probably have the idea better in his mind, not only to make the thing safer for himself, but to make it safer for some other little chap's "Pop."

We are getting out monthly bulletins, about 2,500 of these going out to foremen and workers. These reach our English speaking men only. On the front page, we show some permanent safety committee. A comparative chart shows the different departments

of the different plants by groups, the department with the best record will be placed at the top. A monthly score card, shows the changes as they occur from month to month. These are written up in baseball wordings, and are rather catchy with the men.

We publish accidents that have some particular message to carry to the men; giving our suggestions as to how they could have been prevented. These accident reports are received through the Central Committee of Safety of the corporation, covering all the accidents of the corporation, a broad field, and we have the suggestions made by the members of that Safety Committee.

We also are among our men all the time, asking for ideas on safety devices. When we get a good idea, we put it in the bulletin, giving the name of the man who invented it. We also print picture stories of accidents. A series of photographs, with a short explanation underneath, brings it to the attention of the men quite forcibly what may happen if they do not observe the rules. For example, the first picture would show a foreman starting a green chipper at work in the foundry chipping yard. He is handing him a pair of eye goggles and calling his attention to what might happen if he didn't wear them. The next view shows a man wearing the goggles on his hat, a very common place for them to wear them. The next, however, shows where he has had the lesson forcibly brought home to him. He apparently has had his eye put out. The next view shows him at the hospital with his eye bandaged up. Of course appropriate wordings follow all of the pictures. Even the foreigner can understand this picture story.

On the subject of organization, in carrying the message to the man, a great deal has been said regarding *"getting the workman interested."* We have not found it so difficult to interest the workman, as it has been to keep the foremen and superintendents right up to snuff on the necessity of preventing accidents. We find that after the workman has awakened, he stays awake. He probably does not have the worry that the superintendent and foremen do in getting out the product. We have also found that if a superintendent or head of a department is not paying much attention to accidents, it is reflected by his foreman and his workmen. They too are careless. If, however, he is *"on the job,"* if he makes the prevention of accidents one of the most important features of his

work, if he puts *"Safety First,"* his foremen reflect that feeling by seeing that the men obey the rules and by stopping dangerous practices they reduce the accidents in that department to a minimum.

SANITATION

DR. THOMAS DARLINGTON, Secretary, Welfare Committee, American Iron and Steel Institute

What I have to say will be on the subject of sanitation. You have had a good deal about safety. I feel personally that sanitation is just as important. In the War of the Rebellion, five times as many people died from sickness as from wounds. There are probably more cases of illness in mills than of accidents—perhaps several times as many—and yet we scarcely realize that this is true. Much, most in fact, of illness could be prevented:

The American Iron and Steel Institute was organized for the general service of the industry in several fields. It was partly for social reasons, so that men in the trades that have to do with the manufacture of iron and steel could become well acquainted with each other. This is advantageous in many ways. It also has another branch which takes up the statistics of the trade, and a third in which I am especially concerned. It is of the latter that I wish to speak now, that is the welfare end. Welfare work covers not only safety but also sanitation and hygiene of occupations.

What we are trying to do in the Institute is to bring about better hygienic conditions throughout the industries, that is, not only the iron and steel, but allied industries; such as coal and iron mining. To do this, there are a number of problems which we meet at the outset. The first difficulty is to get money for the work unless you can show that it pays. That it pays to safeguard a workman from loss of limb or from other accident goes without saying, but it has been more difficult to show the money value of sanitation. Still it can be done. It is axiomatic that efficiency depends on health. Wealth depends on production, production depends on

efficiency, and efficiency depends on health. It is of great commercial importance, not only that we protect the men from injury, but also from disease.

Personal Hygiene

The health of any community, and the health of the men in the mills depends first, on personal hygiene—what people must do for themselves. The individual must be taught certain things. Those things which are under his control and which he should do for himself are the regulation of his meals, the amount, character and mastication of them, the amount and character of drink, the hours of rest and sleep, the ventilation of rooms, personal cleanliness (cleanness of body lessens the chance of disease in case of accident), washing of hands before meals, daily washing of feet, proper fitting shoes, amount and kind of clothing, care of the eye, ear and nose, brushing of the teeth, and regularity of the bowels. Cultivation of cheerful thoughts has much to do with the body, especially with digestion. If a person is cheerful he digests his food very much better. Another thing that the workman should be taught is that the first condition of health is fruitful toil. We are made to labor. Few men who have been very active in business and made a great deal of money have lived long after retirement. Work is conducive to longevity, and if everybody could understand that, there would be a great deal more contentment in the world. Next is the question of fatigue, which is being studied at present by many people, but upon which very little has been published up to the present time. When a person makes constant and rapid motion of a muscle, he develops certain chemicals within the muscle; lactic acid and carbon dioxide, and when these are in excess, the muscle will no longer work until the fluids of the body wash them away, and the normal condition is restored. That is not the only condition causing fatigue. If a person has absorbed certain abnormal products from the bowels, such as indol, he becomes fatigued. This shows the necessity of proper water closets. If a person has not had sufficient sugar to eat, or starchy food which makes sugar, then again he is fatigued by lack of material to burn within the muscles. If he has a lack of water, he is fatigued. All of these things bear upon the question of what we shall place in the mill; of the man's environment.

Plant Sanitation

Second, then, is what companies shall do: the conditions of the health to be worked out within the plants; the furnishing of a wholesome supply of drinking water; the regulation of the temperature, methods of distribution, adequate washing facilities; proper sewage disposal etc.; clean floors; the best methods of heating in winter; best appliances for ventilating the work places in summer; good light; provision for lunch and rest rooms, etc. And when these have all been accomplished, then there is the question of the building of club houses, reading rooms, lectures, playgrounds, recreation centers, planting of trees and flower gardens, and providing visiting nurses. But while these things are all desirable in themselves, they are not by any means first.

Public Health

The third matter and this too for the Company to take up, and for you gentlemen to consider, is the education of public opinion by which we shall have more sanitation under public authority.

Having made a long and careful study of the conditions not only in the plants, but also outside, I find that the proper standard of health, and, therefore, efficiency, cannot be maintained in the iron and steel and allied industries because of the inadequate enforcement of law, and because of a lack of proper laws by national, state and local authority. Enormous sums of money are paid in taxes, for which there is no adequate return. Health departments are very rarely fully equipped. Very few deserve the name, and some are simply a name. Not only must the workmen have pure water within the plant but it is your duty, gentlemen, the duty of all of us, to so form public opinion that when the man goes home he shall not have a polluted supply and so contract typhoid fever. I find the greatest amount of disease is acquired not within the plants, but outside of them—in the home, and on the streets.

A healthy body can adapt itself to its surroundings, whether in the arctic circle or at the equator, but it cannot adapt itself to bad milk, putrid garbage, bad drainage, crowded sleeping rooms, foul air, and contagion. The regulation of such conditions is chargeable not to employer of employe, but to the city, town or state as a whole, and such matters are just as much the care of the public as schools, fire or police departments. The losses entailed

are very largely calculable. When we consider the loss in wages, loss of time in school, sickness in hospitals, drugs, doctors, nurses, undertakers, the effect on the family, and a host of other things too numerous to mention, the economy of hygienic measures becomes apparent. But we must go further. Who shall measure the loss of efficiency in the workman if a member of his family is ill and his mind is not upon his work. How much also has this mental abstraction due to anxiety, to do with accidents?

There is a wonderful difference in towns. A certain large city that I could name, up in the Northwest, has a death rate but little over 8, and another town down in Ohio on the Ohio River, has a death rate of 27. Why this difference? Simply a question of the Board of Health putting into practice the things that every physician knows should be done. It is not a matter merely of hygiene by the men themselves, personal hygiene, or by companies, but it is a matter involving the duty of the community.

Instruction in Hygiene

Upon the question of personal hygiene, the Iron and Steel Institute has had in view sending out pamphlets, and several articles have been written to distribute among the workmen. One of the set has already been sent out. That was the fly circular, which was not put out merely in order to swat the fly, but because in some of the towns there are such dirty and nasty conditions behind the houses in which workmen lived. The wash water, slop, everything goes out of the back door and is thrown upon the ground; garbage not collected. It is difficult to get people to do these things unless you can show them some reason. So the first thing that the Institute put out was a fly circular, which was translated into 19 different languages, including Arabic. A great many people wrote to me when they read the circular, and said, "Well, if flies are so bad, why did God make them?" Those questions are sometimes difficult to answer, but being a good Presbyterian I undertook to explain on the outside of the circular, and I used Presbyterian language, "flies were wisely ordained, but we ought not to need their services: where filth and waste are allowed to accumulate, flies are needed to aid in their decomposition and disposal, but if filth and waste are removed, the necessity for the fly is removed." When you undertake to translate these things into various languages, you meet difficulties. I remember when

the Bulgarian translation came in, and I looked at the hieroglyphics, I wondered if the fellow had not put up a job on me; so I took it down into a little Bulgarian restaurant in New York, and asked the man, "What does that say on the outside?" He said, "That's funny." I said, "What does it say?" He said, "Flies are ministers of God, but we don't need them." It shows how careful you have to be with translations. We have in view a great many other circulars, the lunch bucket, how to make bread, gardens, personal hygiene in general, milk, and other things which every household ought to know.

The other articles will be published in the *Monthly Bulletin* to be established at the beginning of the new year.

Workingmen's Gardens

One of the best means of bringing about sanitary conditions is a garden. A house is not always a home; gardens assist in making a place attractive and home-like. Many workmen and their families eat too much meat; in a number of instances 25 per cent of the income was spent on meat. A vegetable garden gives more variety of food, and in a number of places where it is impossible to obtain fresh vegetables, gives a change from canned goods. It reduces the cost of living; in that regard the estimated amount saved this year, or rather added to the income of the employes of the Frick Coke Co., alone, is $262,000 just from gardens, estimated at $50 per garden. It has a tendency to bring the men home from work, so that they spend less time in the saloons, thus tending to reduce alcoholism.

Over $400,000 has been spent the last year by the Frick Coke Co., for improvements in the conditions of the back yards and the homes of workmen, and they have come to the point where the back alleys are kept remarkably clean; no mosquitoes and no flies.

Three hundred gardens obtained prizes the last year. In many places the Company plowed the ground, built the fences, furnished the manure, sometimes the seeds, and gave the prizes. You cannot do more unless you really raise the stuff.

It is not only a question of water supply and clean conditions, but also of having plenty of oxygen in order to resist disease. The important thing is to keep the body up to the point where

it will not catch diseases. If people have a good body resistance, they are not subject to diseases. When we consider that to-day tuberculosis stands first in the list of diseases—more deaths being caused by it than any other disease—and pneumonia stands second, in some seasons exceeding the number of deaths caused by tuberculosis,—these two diseases cause at least two out of seven deaths—it is very important that everybody should realize the need of fresh air.

I trust that the day is coming before long when every workman in every mill will be subject to physical examination, and no one will be permitted to work until his examination is a matter of record. I had the privilege of starting in the public schools, the physical examination of all the children. In New York City we examined 348,000 children in one year. Seventy-eight per cent of those children were found to have defects. Many of these were corrected by reporting them to the families, who did not realize that they existed. Few knew what adenoids were till we told them. I am sure if we went over the workmen in these mills we would find many cases of physical defects which could easily be remedied by calling the attention of the workmen to them, and disease might be warded off by a little care. The trouble is that half the time the man does not know.

The value of physical examination can not be overestimated. A man starts to work perhaps with heart disease. Are you going to put him to work perhaps where you will have to pay a pension to his family right away? Suppose he is ruptured and has been for years; he lifts something heavy, and says he was ruptured thereby. Is it fair to the rest of the workmen, especially where they contribute to the fund? It is not fair to anybody?

The problems of sanitation are many: light, clothing, drink, Sunday-work, housing, the number of rooms, ventilation; warming, lighting and housing for single men; bread, milk, lunch buckets, lunch-rooms, garbage, trained nurses, hygiene and care of children, the care of domestic animals, and recreation.

Gentlemen, I know I have taken a great deal of time and much that I have said is but a repetition of what I have said on other occasions—but I want to say just one or two words in closing, and that is, that there is more than the economical side of this question, there is an ethical side which we must consider. Cain's question was "Am I my brother's keeper?" And the answer has

come down through the centuries "Thou shalt love thy neighbor as thyself". It is our moral duty to take up these various questions of which I have given you a sample. A great deal of good is being done throughout the United States. Many people are working against tuberculosis. Everybody is interested in the conservation of human life. It is a great fight we have before us—a fight against ignorance, prejudice, neglect, poverty, and all the diseases and the misery that spring i m them, but I have unlimited faith in the future, and an abiding faith in the people.

In closing I would like to repeat a few lines which I heard recently in an address:

"I know that the problems that vex us now
Are sore to our erring view;
But we have gained the sight, and we have gained the might
That our grandsires never knew.
We have passed from the day when might was right,
To the day when right reveals
Some part of her face divinely fair
To the veriest clod who feels;
Through the long slow eons we have upward crept
As ever our God hath willed.
And here has the right been crowned our king,
Or there has the wrong been stilled.
There is much to do, there is much to win
For the Ages have taught their lore;
But we clearer see what the right must be
Than ever man saw before."

"THE GREAT NEED"

A VOTE OF THANKS AND APPRECIATION

Extended to MR. DONAHEY, of the *Cleveland Plain Dealer*

MR. MOREY:—Mr. Chairman, Appreciating as we all do the value of *Educational Publicity,* and the very important position occupied in the publicity field by the *Cartoonist,* we feel that we owe a debt of gratitude to Mr. Donahey, of the *Cleveland Plain Dealer,* who has so generously contributed to our cause the original of his splendid cartoon "THE GREAT NEED." Typifying as it did at its first publication *Humanity's* protest against the loss of the ill-fated *Titanic*—it is quite appropriate that we should adopt it—with such striking effect—as the cover design of our program for THE FIRST CO-OPERATIVE SAFETY CONGRESS.

It has been an *inspiration* to many calling them to more earnest effort on the behalf of HUMANITY, on the behalf of SAFETY,—and Mr. Chairman, I MOVE THAT THIS CONGRESS EXTENDS TO MR. DONAHEY A VOTE OF OUR SINCEREST THANKS AND APPRECIATION FOR HIS KINDNESS, HIS CO-OPERATION IN THE CAUSE OF SAFETY, AND FOR THE SPLENDID WORK HE AND HIS FELLOW ARTISTS ARE DOING TOWARD EDUCATIONAL PUBLICITY.—Unanimously adopted.

REPORT OF THE ORGANIZATION COMMITTEE *

NATIONAL COUNCIL FOR INDUSTRIAL SAFETY

To the Association of Iron and Steel Electrical Engineers:

It is appropriate before final adjournment of the Congress, which was made possible by your initiative and has been made successful by your energy, to make a formal statement of the results of the deliberations of the committee requested by you to undertake the further development of the idea.

Your committee has carefully discussed the situation which confronts the movement. After this consideration, conclusions were reached which may be stated as follows:

1st. That a new organization along lines similar to existing organizations which make the subject of safety in industry a part of their program is inexpedient.

2nd. There is need and opportunity for a co-ordinating body which shall serve for future congresses and safety exhibits, the same function which the electrical engineers have served in the present case.

3rd. That your committee will undertake to act as such a National Council for Industrial Safety, adding to their number from time to time representatives of such other bodies as concern themselves with its problems.

4th. That the National Council will begin at once to formulate plans for a 1913 Congress.

5th. That consideration shall at once be given to the promotion of an International Congress on Industrial Safety, at the Panama Canal Exposition in 1915. As the first step in carrying out the conclusions stated above, the Council has organized by electing the following officers: Chairman: FERD. C. SCHWEDTMAN, National Association of Manufacturers; Vice-Chairman: LEW R. PALMER, Iron and Steel Electrical Engineers; Acting Secretary: LUCIAN W. CHANEY, U. S. Bureau of Labor.

Finally the newly constituted body directed that there be placed on record its great appreciation of the services rendered by the Association of Iron and Steel Electrical Engineers, both in promoting the present congress, and to the general cause of industrial safety.

LUCIAN W. CHANEY,
Chairman.
(Org. Committee)

* authorized by Resolution page 3)

Lest We Forget

"When thou buildest a new house, then thou shalt make a battlement for thy roof, that thou bring not blood upon thine house, if any man fall from thence."

Deuteronomy XXII : 8.

A SESSION WITH "THE MAN HIGHER UP"

"A SUMMONS FORWARD"

"A NEW YEAR'S GREETING"

WHAT "THE FORCES OF HUMANITY" HAVE WROUGHT IN IRON AND STEEL

"A SUMMONS FORWARD"

Extracts from President Wilson's Inaugural Address

Our life contains every great thing, and contains it in rich abundance.

But the evil has come with the good, and much fine gold has been corroded. With riches has come inexcusable waste. We have squandered a great part of what we might have used, and have not stopped to conserve the exceeding bounty of nature, without which our genius for enterprise would have been worthless and impotent, scorning to be careful, shamefully prodigal as well as admirably efficient.

We have been proud of our industrial achievements, but we have not hitherto stopped thoughtfully enough to count the human cost, the cost of lives snuffed out, of energies overtaxed and broken, the fearful physical and spiritual cost to the men and women and children upon whom the dead weight and burden of it all has fallen pitilessly the years through. The groans and agony of it all had not yet reached our ears, the solemn, moving undertone of our life, coming up out of the mines and factories and out of every home where the struggle had its intimate and familiar seat. With the great government went many deep secret things which we too long delayed to look into and scrutinize with candid, fearless eyes. The great government we loved has too often been made use of for private and selfish purposes, and those who used it had forgotten the people. . . . . We know our task to be no mere task of politics but a task which shall search us through and through, whether we be able to understand our time and the need of our people, whether we be indeed their spokesmen and interpreters, whether we have the pure heart to comprehend and the rectified will to choose our high course of action.

This is not a day of triumph; it is a day of dedication. Here muster, not the forces of party, but THE FORCES OF HUMANITY. Men's hearts wait upon us; men's lives hang in the balance; men's hopes call upon us to say what we will do. Who shall live up to the great trust? Who dares fail to try? I summon all honest men, all patriotic, all forward-looking men, to my side. GOD HELPING ME, I WILL NOT FAIL THEM, IF THEY WILL BUT COUNSEL AND SUSTAIN ME!

March 4, 1913.

BALTIMORE AND OHIO EMPLOYES MAGAZINE

Volume I BALTIMORE, MARYLAND, JANUARY, 1913 Number 4

New Year's Greeting

Baltimore, Md., January 1st, 1913.

To All Employes of The Baltimore & Ohio Railroad System:

I would like to shake hands with each of the sixty thousand employes of The Baltimore & Ohio Railroad System on this first day of the new year, and extend at the same time my congratulations and best wishes; but as this is not possible, I wish to convey the same sentiments by means of this message to each of my fellow employes in the Baltimore & Ohio service.

There is one request which I wish to make, at this time, of all Baltimore & Ohio System men, and that is this—that during the year just begun, they keep constantly in mind that the most important policy of the Company is clearly expressed in the words "Safety First." Railroading as an occupation is and always will be hazardous at best, and I wish to remind each one in the service that he owes to himself, to his family, to his fellow employes and to the public, the duty of doing at all times all that he reasonably can to make his employment and the operation of the trains as safe as is possible. If this thought is kept in mind by each employe and is permitted to exert, as it should, a constant and controlling influence over his actions, it is certain to result in greater happiness and greater prosperity for us all.

May I not hope to have, during the coming year, the hearty and active co-operation of all Baltimore & Ohio men in support of this policy?

Daniel Willard

WHAT "THE FORCES OF HUMANITY" HAVE WROUGHT IN IRON AND STEEL

Extracts from the *Safety-Rules* of the *U. S. Steel Corporation, International Harvester Co.*, and the *Illinois Steel Co.*

THE UNITED STATES STEEL CORPORATION expects its subsidiary companies to make every effort practicable to prevent injury to the employes. Much can be done by designing new construction and machinery with all practicable safeguards.

Expenditures necessary for such purposes will be authorized. Nothing which will add to the protection of the workmen should be neglected.

The SAFETY and WELFARE of the workmen is of the greatest concern.

E. H. GARY, Chairman,
September, 1912.

PERSONAL TO EMPLOYES

The International Harvester Company intends to make the working conditions of its employes as safe as possible. This book of rules prepared by the Executive Committee of the Advisory Board, and approved by the Advisory Board, the Manufacturing Department and the Officers of the Company, should be of great assistance to that end. A large number of our experienced foremen and experts have been consulted, and the experiences of other companies have been duly considered. Laws of the various states, in which we have works, have been carefully examined, and the laws and regulations of foreign countries have also been studied. To make the printed rules thoroughly effective, they must be backed by the interest and effort of every man in the employ of the Company. We wish the employes to exercise not only the greatest possible care for their individual safety, but also for the safety of their fellow employes, and each superintendent and foreman is instructed to see that these rules are rigidly enforced, and that every possible precaution is taken to avoid accidents. Each employe should realize not only his obligation to the Company, but also his moral obligation to do

everything in his power to protect the life and limbs of the men under his charge, or those working beside him in the shop.

The co-operation of each employe in the enforcement of these rules is expected, and anyone who is unwilling to give this assistance is not a desirable employe. Carelessness, either for one's own safety, or for the safety of fellow employes, will be sufficient cause for discharge. These regulations are the first step in the undertaking we have in hand. The effort must continue to make every place throughout the works as safe as is reasonably possible, and employes are urged to co-operate with their superintendents and foremen in reporting dangerous places or working conditions. Superintendents and foremen are instructed to warn their employes of places where they know danger exists, and we wish employes to warn their fellow employes, who may be inexperienced, of the dangers to be avoided.

This book of rules has not been prepared for a casual reading and then to be laid aside. It should be read and re-read until every rule that pertains to the duties of any superintendent, foreman or employe is fixed firmly in his mind. In the manufacture of its products the Company requires from its employes the best they can do, and likewise along the lines of protection against injury the Company requires their earnest and conscientious assistance.

CYRUS H. MCCORMICK,
President.

April 1, 1910.

GENERAL INSTRUCTIONS FROM THE PRESIDENT

The Illinois Steel Company appeals to every man in its employ to exercise the greatest care for his own safety, and for the safety of every fellow employe. It has always been the policy of the Illinois Steel Company to guard all dangerous machines and places on its plants and to make all operations as safe as possible. Most of the Rules and Regulations which follow have long been in force in its several plants. It is hoped that in the present form, these Rules, Regulations and Suggestions will reach the hands of all the employes of the Company and aid in the establishment of discipline and of habits of caution.

Each man should remember that his safety depends upon the hearty co-operation of every other employe of the Company in the effort to use such precautions as will make working conditions safe. If any one is careless, he imperils the safety, not only of himself, but of others. Therefore, every one must care not only for his own safety, but for that of every fellow workman. As he hopes for his own safety, so must he be his brother's keeper. Accidents happen at the unexpected time. Eternal vigilance is the price of safety. If every one will give his hearty co-operation to the suggestions which follow, he will care not only for the safety of himself but also for the safety of his fellow workmen. If you are unwilling to give your hearty co-operation to these Rules, Regulations and Suggestions, we wish you would voluntarily leave the employ of the Company. If the Company discovers that any one in its employ is not giving his hearty co-operation to these Rules, Regulations and Suggestions, it will summarily end his employment.

This is not only an appeal to the employes of the Company to observe every care for the safety of themselves and of others. It is also a direct order from the Company to every superintendent, foreman or other person having authority over its employes, to make those under them take proper care for their own safety and for the safety of others in doing their work. Such conduct must be enforced by such discipline and penalties as may seem reasonable. It is not suggested that every one who at any time may be remiss in the slightest degree should be immediately discharged. If such a rule was adopted, it would not be long before the most experienced and the most valuable men would be gone, and the operations of the plants would be in the hands of green men. But every one, who has been remiss in the slightest, should be made to realize directly and personally that he has failed in what is expected from him. If he has been neglient under such circumstances as to show an unwillingness to give his best efforts for the safety of himself and his fellow workmen, or that he is unfit to perform the work of the Company, then he should at once be discharged from the employ of the Company.

Every effort should be made to make every place upon the plant where men are employed as safe as possible. Many rules and suggestions follow having that purpose in view. It must be remembered,

however, that it is impossible to make the machinery and places safe, once for all, and then to rest in the belief that that work is finished. Every place must be made as safe as possible and then every effort must be made to keep that place safe at all times and under all conditions. It must be remembered that on every manufacturing plant where there are moving machines, moving cars and moving materials, after every precaution has been exercised to make the place and the surroundings safe, men will be endangered if they are heedless and careless. More important than safe machines and safe places are habits of care and watchfulness.

Remember that at all times some of the men on the plant are inexperienced and may not know where danger exists. Warn any man when danger is near. He may know all about it. If so, no harm is done. If not you may save his life.

Remember never to move any car or set in motion any machine until you are sure that no one is in the way.

Remember the rule: when in doubt, take the safe course.

Remember that while every man is hired to do some particular work, the safety of himself and his fellow men is more important than that work. If any foreman has an accident in his gang, to that extent he is unsuccessful in his job.

Remember that all the rules and regulations which can be adopted; all the safety devices which can be attached to the machines; all the guards which can be erected; all the warning signs which can be posted are all useless unless every man is careful to see that they are maintained; unless every man is careful to watch for danger; unless every man is careful to warn others of danger.

Remember to be careful under all circumstances. Keep in mind at all times the necessity for care. It is so one disciplines himself. When caution becomes a habit there will be but few accidents.

As a means for securing the co-operation of the employes of the Company, each plant will be divided into divisions. Three workmen will be chosen to act in each division as an inspection committee to serve two months each. Each member of this committee will spend one day a week inspecting his division (making eight inspections in all) and will report his findings and suggestions to the Safety Inspector after each inspection. After their term on the committee expires, the men who have served are urged to continue looking

for dangerous places or dangerous customs or dangerous conditions in their division and to report the same to their Superintendents or to the Safety Inspector. In course of time it is hoped that a large proportion of the employes will be actively looking for dangerous places, customs or conditions.

Every man appointed to this committee should remember that his duty is a most important one. He is not a spy. He is a Safety Inspector. He is harming no one when he points out a dangerous place, a dangerous condition, or a dangerous custom. On the contrary, he is protecting the life and limb, not only of himself, but of all his fellow workmen on the plant.

E. J. BUFFINGTON,
President.

July 1, 1909.

APPENDIX

(STATES SESSION)

ILLINOIS SYSTEM OF FACTORY INSPECTION

EDGAR T. DAVIES, Chief Inspector of Illinois*

Mr. Chairman, Gentlemen: It is a pleasure to address this body of practical, clear-thinking, active men who are engaged hourly and daily in the study of safety and accident prevention. I will apply my remarks on the Illinois system of Factory Inspection so as to cover the field in a broad sense. To you men I will say, that I would rather build a fence at the top of a precipice then a hospital at its base. I would rather be a safety engineer than a prosecutor. I would rather be a humane preventative engineer than a safety engineer, and in the few moments alloted me, I shall endeavor to offer a number of suggestions along these lines acquired as the result of actual past experience.

The Illinois Department of Factory Inspection with its numerous duties is one of the few Departments conducted officially by a State for the enforcement of labor laws, prevention of accidents and the protection of the industrial workers. The number of States which have interested themselves sufficiently to maintain such Departments is very small.

It is to be regretted that a Commonwealth glories in its pride of vast industries and yet remains dormant in its legislative treatment of its industrial wage earners. There are only a few States in this country, and you can count them on your fingers, they are worthy to be called Factory Inspection Department States, and I speak advisedly, Mr. President, by reason of the ethics in this official circle. As President of the National Association of Factory Inspectors, I must be careful how I criticise my associates.

New York has accomplished much, Indiana and Massachusetts are laying an excellent foundation for good work, and Minnesota can well be proud of your Chairman who has created there a Department of ability, Wisconsin is making rapid and very valuable progress, New Jersey, under General Lewis T. Bryant, who will address you, has been moving up rapidly and in many ways, I will say, each in their particular field has some particular bright line

* [EDITOR'S NOTE: Mr. Davies' paper was read as part of the States Session but owing to unavoidable delay in correcting stenographic notes, we were unable to print with proper session.]

which it follows. General Bryant's magnificent achievements of fire protection as well as safety protection must be acknowledged. Wisconsin with her industrial commission must be congratulated although I would hesitate to say as to whether I would indorse the same principle for all States. The adaptability of Commissions depends upon the size and character of the States' industry. However, Wisconsin is blazing the way of Commission forms of government, they stand on good ground and are achieving excellent results. The State of Ohio is making especial efforts. There they are exhausting every means of study and thought that must promise in the future great growth and effective results. Michigan scores lightly. Oklahoma, handicapped by a very small force, is entitled to compliment. Iowa, under Van Dyne, shows signs of advancement. Outside of this I challenge any State other than Pennsylvania with its tremendous possibilities, with its complement of corps, with its opportunities yet undeveloped and unused, to show me a department of safety inspection governed by the State and enforced efficiently. I would rather speak plainly, for then I would be understood.

We, in Illinois, have endeavored to initiate and in many ways imitate. We try to absorb the knowledge which others unearth, we do some research work of our own, and yet we find ourselves far from the goal of perfection and attainment for which we are striving. To comprehend the duties of the Illinois Department, one must bear in mind the innumerable exigencies which arise in connection with the enforcement of the Child Labor law which prohibits children under fourteen engaging in gainful occupation, those between fourteen and sixteen must have an Age and School Certificate, and those under sixteen are not permitted to work after seven o'clock at night. These laws apply to every industry in the State of Illinois.

In addition to the Child Labor law, the manufacturer of butterine and ice cream is made to live up to certain laws which regulate sanitary and hygienic conditions in such establishments. We inquire also into the question of lifts, hoists, tensile strengths of floors, boarding-over of open floor space, danger signs, etc., in fact, everything which would tend to make the course of building construction throughout the State safe and harmonious. Another law brings sweat shops to our notice. This Act is a most important one. We prohibit the manufacture of clothing under conditions deleterious

to health. Where it may become contaminated by vermin, bacteria, or by bacilli, and thereby transmit unforeseen and untold disease. The number of sweat shops in Chicago has been reduced from 5,600 to 2,400. Another Act of the Illinois Legislature makes it obligatory on this Department to restrict the hours of labor for women to ten during one day in all establishments, shops, stores, those engaged in transportation, in places of amusement, and in mills, factories, mercantile establishments, etc. But we seek to reach that state when a reasonable number of hours for women shall be prescribed in order to avoid fatigue and over-exertion. When this has been accomplished the next generation will not be so adversely affected.

And now I wish to call your attention to the Act known as the Health, Safety and Comfort Act. This Act gives our Department jurisdiction over boiler-rooms, all floors and floor space in plants, stairways, doors, elevators, sanitation, ventilation and hygiene of plants, seats for women, fire protection, guards for machinery, etc. Furthermore, one of the most interesting sections of a new and additional law, guards against occupational disease and makes it obligatory to report such diseases where a wage earner becomes ill by reason of contact with some poison, poisonous dust, poisonous fumes or gases, as from lead or poisonous acids. Where poisonous ingredients are employed in the process of manufacture and employes fall victims to their ill-effects, they have acquired the commonly known "Occupational Disease".

The Health, Safety and Comfort Act of Illinois, together with the Occupational Disease law and all previously described acts are legislation of modern type. The legislature in proper response to an awakened public sentiment enacts reform measures and places them as laws upon the statute books, and we in America are fortunate in having an army of excellent people and hard workers in the social service field, who give up their best service in crystallizing public sentiment so that progressive advancement may be made in the enactment of laws for the welfare of men, women and children. It is to be regretted that the average women of this class are content to feel that results have been accomplished simply because a reform law has been enacted, for they seem to cease their good work whenever the law has been secured and placed upon the

statute books. They have, so to speak, the possession of the infant, but fail to nourish it properly. In the same way they have the act or law, but do not nurse the possibilities for the development of the purpose of the law that they have requested or secured. These good people fail to manifest sufficient interest to get from the law-makers the necessary skilled help or additional inspectors or depart-partmental employes to make possible the proper enforcement of the law or laws after they have been enacted. Consequently, with a department of the kind over which I have the honor to preside, with the multiplicity of duties we have to perform, we find ourselves seriously handicapped for the need of additional employes or able assistants to administer legislation charged to us for enforcement.

The enforcement of law, the building of respect for the same and healthy compliance therewith, accomplishes much in the direction of the reform desired. Yet I take it that the mere passing of laws, the enacting of a skillful, technical, practical statute, well-worded from a legal standpoint, and drafted from an applicable engineering standpoint, if the law be one for safety, will not, and does not entirely in itself reach or cure the evil aimed at, not does it of itself wipe out industrial accidents. The guarding of machinery is but a factor in the elimination of industrial accidents, the major factor in safety practise in the elimination of industrial accidents, is good shop discipline, the hiring of the right kind of people as employes, supervised by the intelligent, thinking, active, aggressive disciplinarian who has at heart the interest of his employer, and the interest of the business and welfare of his men, and in addition to this, can mold an *esprit de corps* within the establishment and secure the observance upon the part of the employes of the rules and regulations which have been laid down to be observed in the conducting of the plant; but another factor not to be overlooked is an important one, and one which every man must carry out faithfully and of his own accord, and that is the simple question, yet important in itself—"personal hygiene". The individual workman must regulate his habits, be careful of his food, his hours and his social condition. If he preserves a clean body, his mind will reflect clearness of vision, and his attention to his employer and fellow workmen and his personal interest will become his ablest asset.

The third element, the guarding of dangerous machinery and

minimizing of industrial accidents, has in this country only in the last few years, received anywhere near an approach to the intelligent consideration its importance deserves. It is true that some states have made some progress, not as much as England, Austria, or Germany, but we are giving closer attention and deeper study to the subject daily, and while in this stage just preceding statuary enactments, for they usually follow as forerunners of any circle or social reform.

We should try to so work to get as employes, employers and officials that there may result some uniformity of law and standards of accident prevention; else we shall find ourselves confounded by the fact that each Commonwealth has adopted a different scheme or plan of factory inspection for laws for accident prevention or reduction. To drive this point home—then I shall have finished—let me ask what two States have the same law—two States with the same principle of guarding. Most of the States with the exception of those I have mentioned, are in the conduction of their Departments of Factory Inspection, but mere political dumping grounds. I do not wish to reflect upon the integrity or good intent of their official staffs, but with rare exceptions the inspectors will be found to be men picked from the ordinary walks of life, unskilled and without the knowledge which they should possess to be qualified factory inspectors. A factory inspector endowed with authority to prosecute for failure to comply with the law, should be himself in possession of the technical and general knowledge, so that in his visit to a factory or a plant he may be of assistance to the operator in guarding his machinery and direct the elimination of zones of hazard; thus, and thus only, can he render to the factory employes that service which every working man is entitled to, of having his life and health protected through the application of the highest and most thorough scientific knowledge on the subject. Some States have enacted civil service laws and the same are applicable to the Department of Factory Inspection—they must follow as night the day. That is an improvement over the old scheme organization; more emphatically so if such civil service laws are well administered and regulated in their observance, provided, of course, that the employes who are developing as field workers or factory inspectors for the state department, are selected after severe and thoroughly

technical competitive examination, and are then to render to their time and service full attention to their duties, free and untrammeled by political observations or interference. Such an establishment is the purpose of Illinois. There is no employe in the employ of the Illinois Department who is not subject to the rule, for each is selected on the competitive basis open to all comers, and the man or woman who passes at the top of the list secures a position to fill any vacancy which may obtain, or new positions which may be created, and the corps of inspectors is made of several different classes of examination—general, mechanical, electrical, medical, building, construction, sanitary, child labor and hours of women inspectors. I do not say that the Illinois system is the best that can be secured—if it can be improved we welcome suggestions, but it is in fact a big improvement over any plan which has yet preceded it. What we are directly in need of in Illinois at the present time is authority from the legislature, to employ and get necessary additional inspectors, and compensate them with salaries commensurate with the duties and obligations of the office. The salaries should be of such a standard, that there will be attracted to the examinations for positions of inspectors, that class of help who are now engaged in safety work in the employ of manufacturers and operators throughout the country. Last night at the banquet the toastmaster accepted and indorsed the text of the evening—"My brother's keeper". You in your respective fields of efforts serve your employer in the capacity of safety engineers. Your business in the reduction of accidents is a new one; it came into being because of the fact that in this intelligent day and age employers have found it is not only in itself human but a direct question of economics, that accidents are costly interruptions and disastrous in their consequences. Great sums of money are being expended, and the best thought and attention given by men of technical attainments in the cause of "safety first." All this is essential and is proving a valuable investment on the part of capital. Now in the discharge of this important obligation, for the welfare of our fellowmen, let us keep before us that text of last evening, and in our work ever appreciate that we are to some extent obligated to be "our brother's keeper," and if we do our reference, will have the inspiration of the highest conception of human interest. We desire not only to

be accurate and skilful, economical and profitable to our employer, but deeply interested at heart in the welfare of every man, woman and child made to toil, for such a sense of sentiment welded with our official obligations, will aid us in discharging our work with a daily increasing knowledge that no cost sensibly and practically incurred though it may be, is equal to the great cost of our fellow-kind when an accident obtains which takes from him his life, his limb, his health, and may I say his happiness. For carelessness and lack of efficiency, and saving of a few dollars which it would cost to guard properly arises, factors which result in so many cripples, widows and orphans, which in their increasing numbers are making us, working in the field of accident prevention, realize the cost of this waste annually, not only in dollars and cents to the nation, but in the general welfare of its people in the growing tenaments, and in closing, may I suggest to those officials in public life charged with the enforcement of laws for accident prevention, that they come closer together and act in a spirit of harmony with a hope and desire to standardize their efforts, and apply the law not because we are prosecutors, but engineers in behalf of humanity, and apply the various provisions of the law applicable to the employer in such a way that he will be encouraged to get his fellow member of humanity to follow his good example in looking after the welfare of his employes, because it is not only the economic thing, but the just thing to do. Each order should be given careful attention and supervision so that the law may be applied at the least cost and never insisting upon, or attempting to impress upon the employer the fact that he must comply with the provisions of the law simply because the law demands it. I have found that where you can show the reasonableness and value of the application of the law, the employers generally, with rare exceptions, are of sufficient intelligence and sufficiently interested in the welfare of their men to do the right thing if properly shown the right way.

Before leaving for your homes again to take up the duties of the plants of this great nation may I say to you—the official inspector needs your help—and may I in behalf of the factory inspectors of this country, express our great need of your hearty co-operation in bringing about that assistance we so much need and which by all is so much desired; that in our efforts to protect the

welfare of the working man and woman against the ills which beset an industrial life, we should have for our assistants those to aid us who are by their especial training, well qualified to give the employe the best character of protection, and the employer the best character of service; that when these men and women are placed in official life, and discharge their obligations with real true interest and intelligence, they shall be secured in their positions and compensated commensurate with the duties they perform. Therefore, will you help encourage the employer to take an interest in the proper organization and maintenance of the Factory Inspection Department of this State. This they can do—and only do—through bringing to the attention of the Legislature and the executive officers of their Commonwealth the conviction that more liberal allowances should be provided for the Department of Inspection and politics eliminated therefrom.

Universal Danger Sign

Adopted by the [illegible] Steel Corporation, and in use [illegible] Companies. This RED BALL is placed on all warning signs to indicate danger, and for the especial benefit of the foreigner who cannot read. It is hoped this will become as significant as the Red Cross; and, to that end, its general use by other employers, both in this country and abroad, is being suggested and invited.

We urge its universal adoption

Safety Committee A[illegible]