BESTWALL

HUMMER SYSTEM

"A" MODIFIED

AN IMPROVED METHOD OF APPLYING TWO LAYERS OF GYPSUM WALLBOARD TO FRAME CONSTRUCTION

See your nearest Bestwall Gypsum Dealer.

Ask your Bestwall Certain-teed Salesman.

FIREPROOF GYPSUM BESTWALL BUILDING PRODUCTS

MANUFACTURED BY BESTWALL GYPSUM COMPANY

Sold through: Bestwall Certain-teed Sales Corporation
120 East Lancaster Avenue, Ardmore, Pa.

Form No. 5535

PLAINTIFF'S EXHIBIT

GP-645 HH

SGP 0027208

MATERIALS REQUIRED:

1. 3/8" Tapered Edge Bestwall Gypsum Wallboard.

   a. For back up board use 3/8" "Backer" a 4' wide or 2' wide gray face and back paper board, or recut and scrap pieces, 3/8" thick. Where ceiling supports are 24" on center use a 1/2" thick board for the back layer.

2. 3/8" Tapered Edge Bestwall Gypsum Wallboard with Center Taper paralleling long edges of board.

3. GWB-54 gypsum wallboard nails or Bestwall Hummer annular ring steel wire nail, 13-1/2 gauge, 1-3/8" long, 15/64" flat head medium diamond point nails.

4. 4-d, 13-1/2 gauge, 1-3/8" long, 1/4" flat head diamond point nail.

5. 3/4" Phillips flat head #14 wood screw threaded up to shoulders as manufactured by American Screw Company or equal.

6. 6-d double head scaffold nails.

7. Bestwall Adhesive or Casco #202.

8. Bestwall Joint System materials including Cement, Bedding Compound, Topping Compound, and Paper Tape.

APPLICATION:

The first or back layer of both walls and ceilings, with the ceilings being applied first, shall be erected and nailed to the framing members as in single layer nail-on application to wood framing according to ASA 97 except the nail heads shall not be dimpled.

Bestwall Tapered Edge Board with a Center Taper shall be used for the second or face layer on ceilings. The face layer shall be applied on the ceiling at right angles to the framing members and in such a way as to eliminate, or keep to a minimum, butt end joints. Neither the end joints or the edge joints in the face layer should fall over joints in the back layer. No edge joint nor end joint in the face layer shall fall over a nailing member. End joints shall be so installed as to fall mid-way between adjacent nailing members.

Apply Bestwall Adhesive to the backside of the face layer and nail the face layer in place using 6 d double headed scaffold nails at each nailing member, with the nails confined to the Center Taper or to the Edge Taper. As the sheets are installed and before the glue has set, drive Phillips head wood screws between nailing members, in the center taper, and in the tapered edge joint between two adjacent sheets. Use a special counter sink to make a hole for screw head and to start the screw. The screws should then be brought up and home with sufficient force and with the board so held that the screw head will be slightly countersunk and home tight when finished. Use a screw driver with an adjustable gauge for setting screws and holding face board tight to back board. Where a butt joint occurs in the field, Phillips head wood screws 12" on center shall be driven in the joint between the two ends just as along the Tapered Edges. For best results where mill cut ends are damaged about 1" should be cut off the mill end of every board before it is installed where it will be at a joint in the wall or ceiling expanse (not at corners).

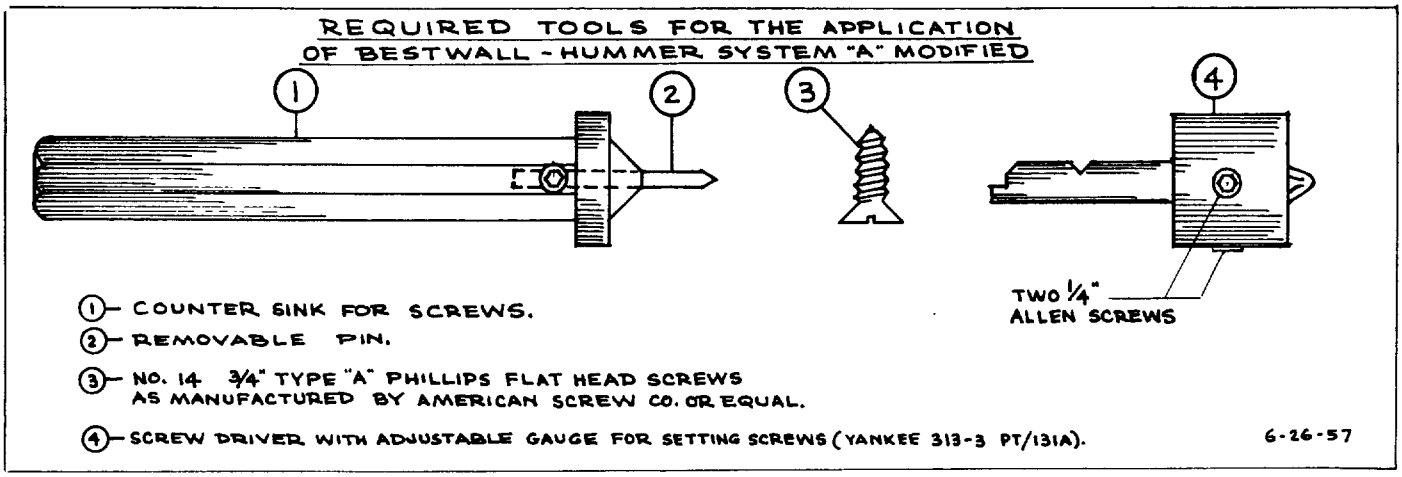

After the glue has set (approximately 24 hours, at least over night) the double headed nails shall be removed. This method will leave no face layer fastener embedded in the wood nailing members or framing since the double headed nails are pulled before the joint work is started.

SIDEWALLS:

Regular Tapered Edge board shall be used on walls. The face layer shall always be applied horizontally with the top sheet put in place first. Use Bestwall Adhesive applied to the back of the face layer. The top board is held tight against the back board while 6 d double headed nails are driven through both layers of board and into the nailing members. These nails shall be about two inches from the ceiling angle. Another row of double headed nails is driven in the tapered edge of the lower edge of the board. The next layer of board is applied with a row of double headed nails in the tapered edge on the top side. If the lower edge of the board falls under the base board, it is nailed with regular wallboard nails. If exposed, it shall be fastened with double headed nails. After the lower face layer is installed with end joints (if they occur) staggered, Phillips head wood screws should be applied in the tapered edge joints, between nailing members. End joints between sheets should fall midway between the nailing members and Phillips head wood screws should be driven in the joint 12" on center.

Where poor alignment of framing or nailing members holds the face layer from full contact with the base layer, double headed nails may be driven in the field of the board into the nailing members to hold face layer against back layer till glue sets.

After glue has set (approximately 24 hours or at least over night) all double headed scaffold nails shall be removed before joint system and tape is applied. Holes in the wallboard left by the nails not under a tape shall be slightly indented and subsequently filled with joint cement. The joints shall be finished in the standard way with joint cement and tape.

The decoration of the board shall be done in the manner used on a regular gypsum wallboard installation. For best results a skim coat of joint system cement should be used over the entire board area as the final application before priming for decoration. In applying the skim coat the joint system cement should be mixed to a thin consistency and applied to the entire board surface with a 12" wide knife or with a wide roller, and then sheared down tightly with the wide knife. With skill this application properly made, not only can eliminate sanding, but also will tend to equalize suction over the entire board area, reduce or eliminate slight shrinkage differences that may occur if a shear coat is not applied, and level off slight imperfections that may be present that are seldom noticed in the board's surface until after it has been decorated.

ADVANTAGES & COST COMPARISON:

SGP 0027210

This method of installation does two things of great importance in wallboard installation. It eliminates any fastening device, screw or nail which is in the exposed face layer from contact

with or penetration into any wood member. By eliminating the basic cause of nail popping (fastener in wood) this one feature practically eliminates all possibility of this serious complaint. Insofar as the photographing of screw heads is concerned, which is a discoloration due to a temperature differential across the surface, any installation which will be such quality that the contractor and owner will pay for laminated wall construction, will invariably include building insulation in the joist and stud spaces. This insulation will eliminate the temperature differential between the screw head and the surrounding surface with the result that there is not spotting over those screw heads. The joint treatment putting all of the screw heads under a paper tape and cement is an added protection against "popping" or "spotting" of screw heads. Cutting off a minimum of 1" from the manufactured end of the wallboard sheets meeting in the field of the wall or ceiling insures hard ends without paper split. This act with the lamination of the face layer to the back layer eliminates the major factors which contribute to beading or ridging at joints.

A Bestwall Hummer System "A" Modified installation is the best possible one to produce a pleasing, trouble free, surface. Compared with a conventional two layer application as the Bestwall Hummer System "A" the additional cost is minor. Based on a house 24' x 36' the additional cost for the ceiling is:

	Unit Cost	Total Cost	
600 - #14-3/4" Phillips Screws	$ .75	$4.50	
Labor Cost 600 screws (400 per hour) 1-1/2 hrs.	3.00	4.50	
Drawing double headed nail 1 hour	3.00	3.00	
Center tape board	0.001	0.85	$12.85

Labor cost to tape center taper is about the same as filling two rows of nails.

The same house might have 300 lineal feet of wall 8' high. The additional cost would be:

150 #14-3/4" Phillips Screws	$ .75	$1.25	
Labor cost 150 screws (400 per hour) 1/2 hour	3.00	1.50	
Drawing double headed nails 1/2 hours	3.00	1.50	4.25
Extra for walls and ceilings			17.10
Less labor filling nails in center of bd. 3 hours	3.00	9.00	9.00
Total extra for a small house			$8.10

With savings by improved techniques and eliminating going back to repair pops or joint beads, Bestwall Hummer System "A" Modified may actually be cheaper than conventional two layer applications. In comparison with the method requiring glue and back up of all joints with special bracing in erection, there is little difference in cost in place, yet the finished wall is a complete double layer and definitely a better quality job.

A variation that may reduce the cost, but at the same time sacrifices some of the advantages of the overall scheme is to use a regular gypsum wallboard nail 1-5/8" long in the finished layer in nailing the face layer up before using screws, instead of a double headed nail. Using this nail only in the Taper (Edge or Center) and leaving it in place, will still leave all nails and screws covered by a paper tape and cement. Nails in the taper at the joint should be placed so as to always fall under the paper tape. This variation will help reduce nail "popping" and "spotting" but is not as positive as the method of pulling the nails.

Using this alternate reduces the number of Phillips head screws and eliminates the double headed nails in the ceiling so that the extra cost shown above is only:

300 - #14-3/4" Phillips screws (ceilings)	$ .75	$2.25	
Labor cost 300 screws 1-3/4 hours	3.00	2.25	
Drawing double head nails 1 hour	3.00	3.00	$7.50

Thus the cost of this alternate is practically the same as conventional two layer work.

The following sheets give the specifications in detail

SGP 0027211

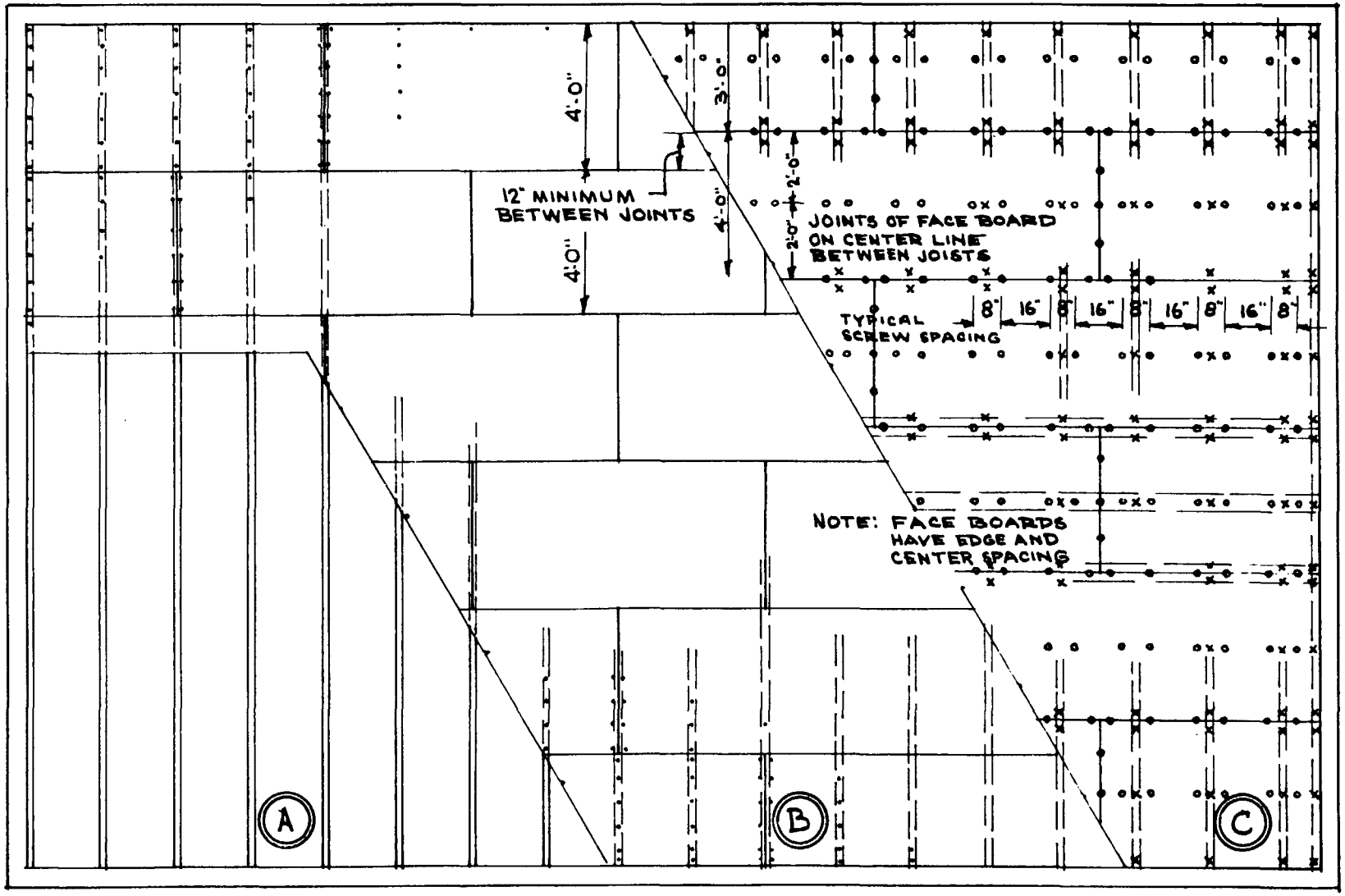

REFLECTED CEILING PLAN AS SHOWN OR ROOMS

(A) - EXPOSED CEILING JOISTS.

(B) - CEILING JOISTS COVERED WITH 1ST. LAYER BOARD.

(C) - COVER 1ST. LAYER BOARD WITH FACE BOARD.

(·) 4d. 1⅜" FLAT HEAD NAILS 8" O.C.
(x) 6d. DOUBLE HEAD NAILS.
(o) ¾" No 14 FLAT HEAD, TYPE "A" PHILLIPS SCREWS.

ALTERNATE NAILING: SEE DRAWING SEPARATE PAGE

6-26-57

SGP 0027212

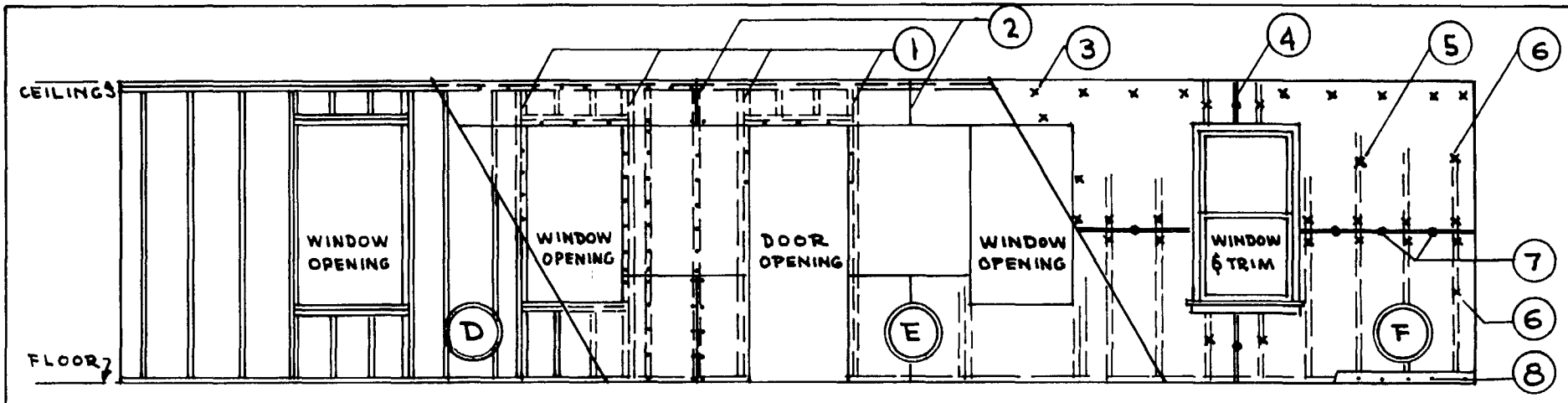

ELEVATION OF WALL AS SHOWN OR ROOMS

(D) EXPOSED STUDS. (E) 1ST. LAYER OF BOARD OVER STUDS. (F) FACE BOARD OVER 1ST. LAYER.

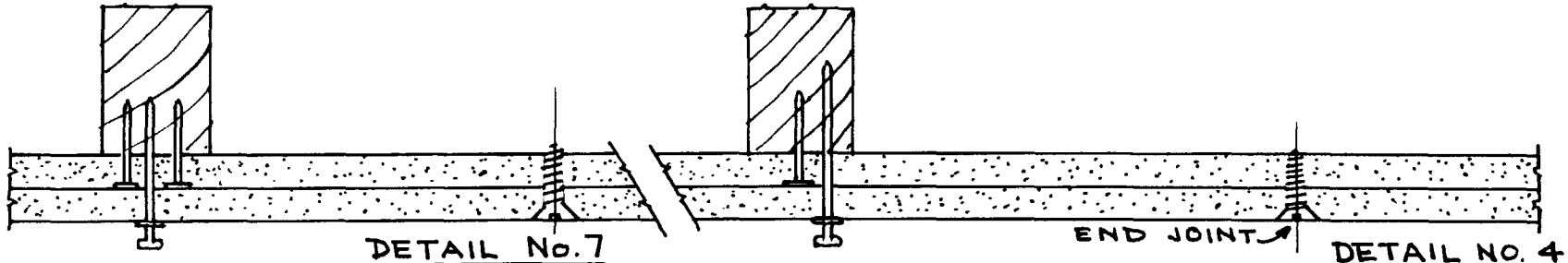

DETAIL No.7

END JOINT

DETAIL NO. 4

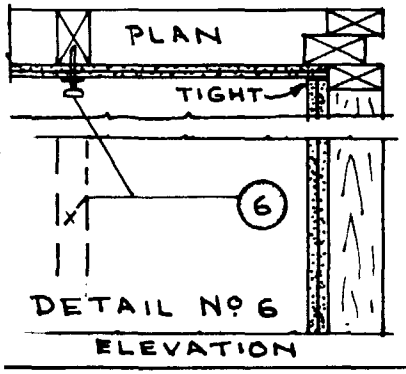

DETAIL No 6
ELEVATION

(1) NO NAILING AT CORNERS OF OPENINGS IN FIRST LAYER & FACE BOARDS: NO JOINTS AT CORNERS OF OPENINGS IN 1ST LAYER & FACE BOARDS.
(2) JOINT IN FIRST LAYER BOARD.
(3) 6d. DOUBLE HEAD NAILS
(4) JOINT IN FACE BOARD & PHILLIPS WOOD SCREWS MIDWAY BETWEEN STUDS.
(5) AFTER BOARD IS IN PLACE SCREWS & NAILS DRIVEN, PRESS BOARD IN THIS AREA, IF FACE BOARD IS NOT IN CONTACT WITH 1ST. LAYER OF BOARD DRIVE A DOUBLE HEAD NAIL.
(6) DOUBLE HEAD NAIL DRIVEN AT FIRST STUD FROM CORNER, MIDWAY BETWEEN EDGES OF BOARD.
(7) PHILLIPS SCREWS MIDWAY BETWEEN STUDS.
(8) 5d. $1\frac{5}{8}$" FLAT HEAD NAILS 16" O.C. BEHIND BASE BOARD.

BESTWALL - HUMMER SYSTEM "A" (MODIFIED)

6-26-57

SGP 0027213

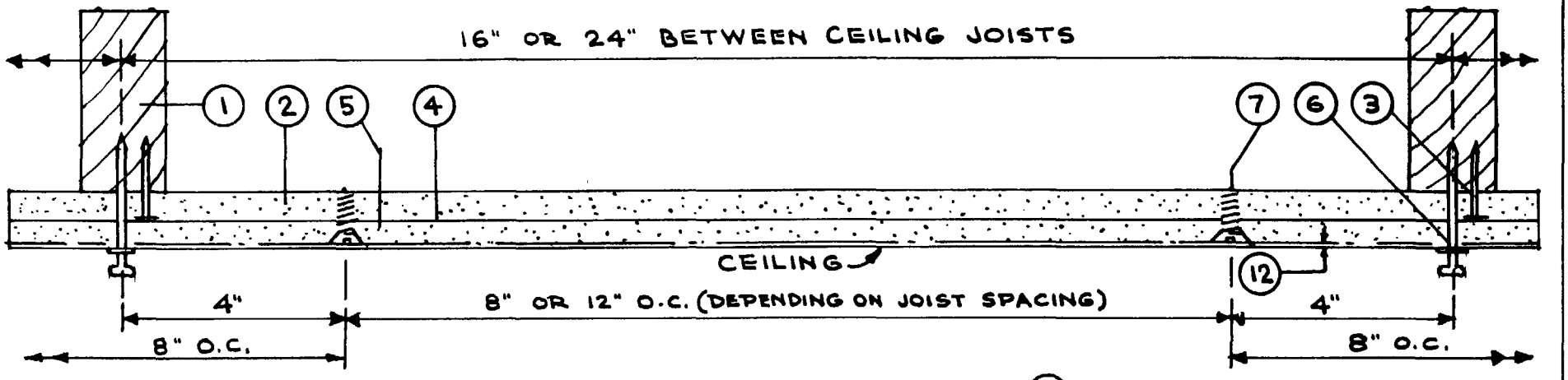

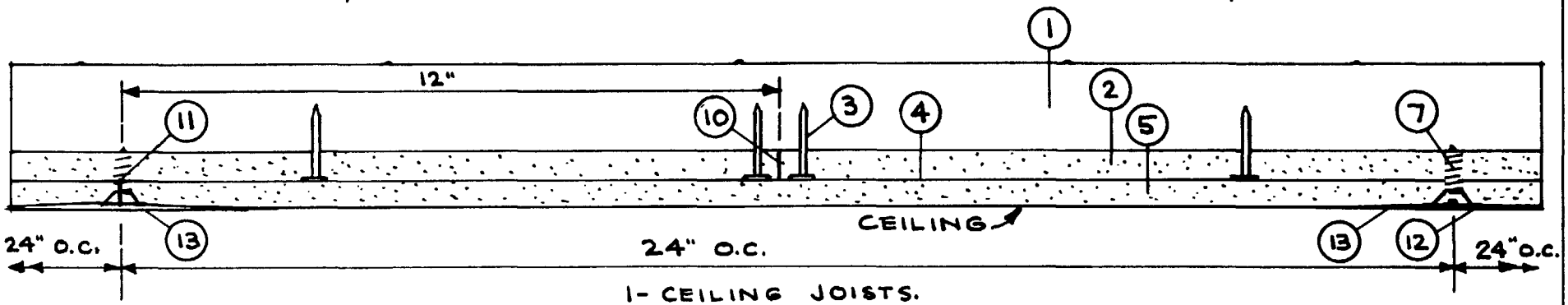

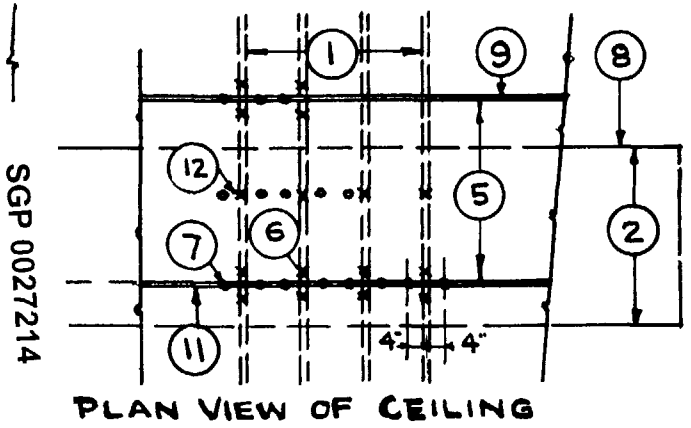

PLAN VIEW OF CEILING

SGP 0027214

1- CEILING JOISTS.
2- FIRST LAYER OF BOARD.
3 - 4d. 1 3/8" FLAT HEAD NAILS @ 8" O.C.
4 - BESTWALL ADHESIVE OR CASCO NO. 202.
5 - SECOND LAYER (FACE BOARD).
6 - 6d. DOUBLE HEAD NAILS AT EDGE & CENTER OF FACE BOARD DRIVEN INTO FRAMING.
7 - NO. 14 TYPE "A" PHILLIPS 3/4" FLAT HEAD SCREWS.
8 - FIRST BOARD EDGE.
9 - FACE BOARD EDGE TAPER.
10 - JOINT IN FIRST LAYER OF BOARD.
11 - JOINT IN FACE BOARD.
12 - FACE BOARD CENTER TAPER.
13 - TAPE & JOINT CEMENT.

SECTIONS THROUGH CEILING

BESTWALL - HUMMER SYSTEM "A" MODIFIED.

6-26-57

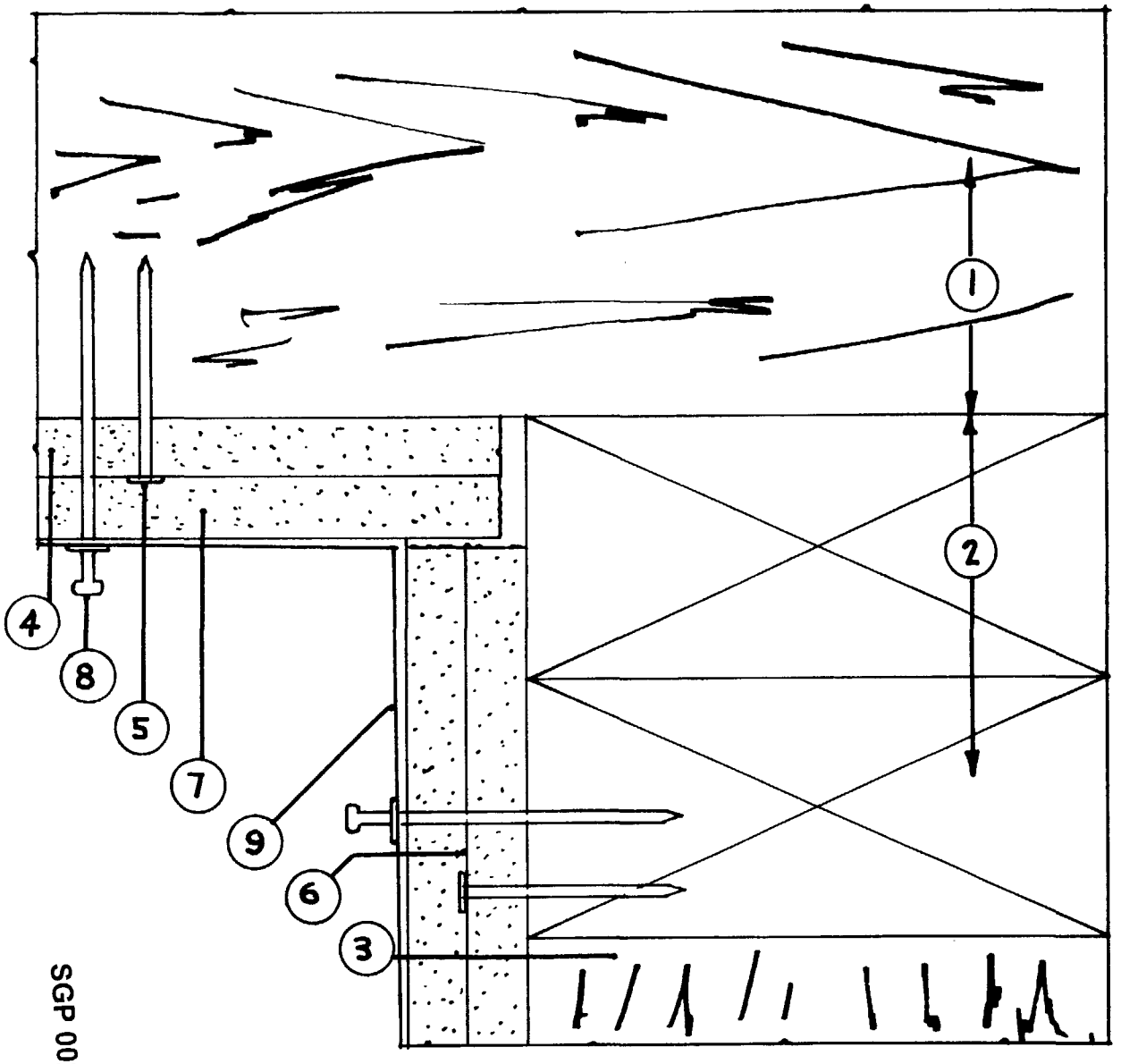

ANGLE AT WALL & CEILING

1. CEILING JOIST
2. PLATES
3. STUDS
4. FIRST LAYER OF BOARD
5. 4d. 1⅜" FLAT HEAD NAIL 8" O.C.
6. BESTWALL ADHESIVE OR CASCO NO. 202
7. SECOND LAYER (FACE BOARD)
8. DOUBLE HEAD NAILS 16" OR 24" O.C.
9. TAPE & JOINT CEMENT.

BESTWALL-HUMMER SYSTEM "A" MODIFIED

6-26-57

SGP 0027215

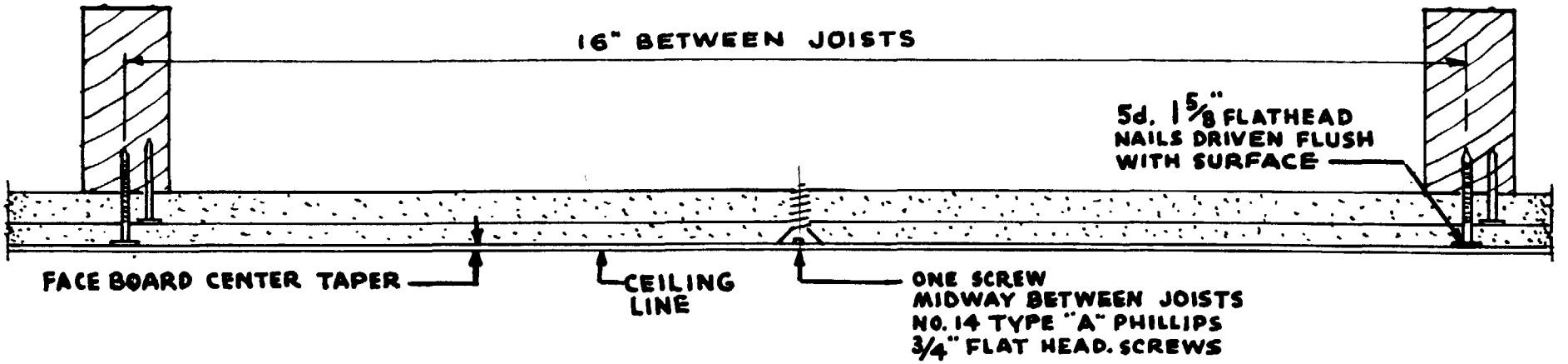

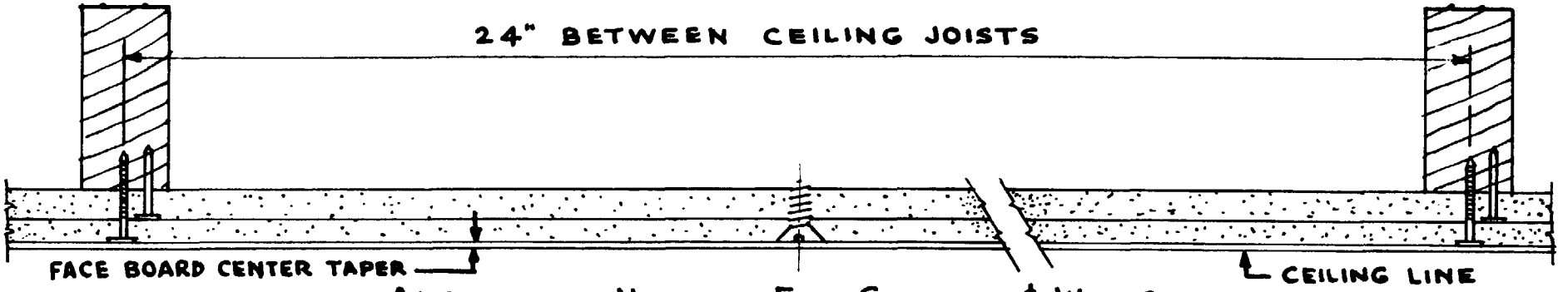

ALTERNATE NAILING FOR CEILINGS & WALLS
BESTWALL - HUMMER SYSTEM "A" MODIFIED

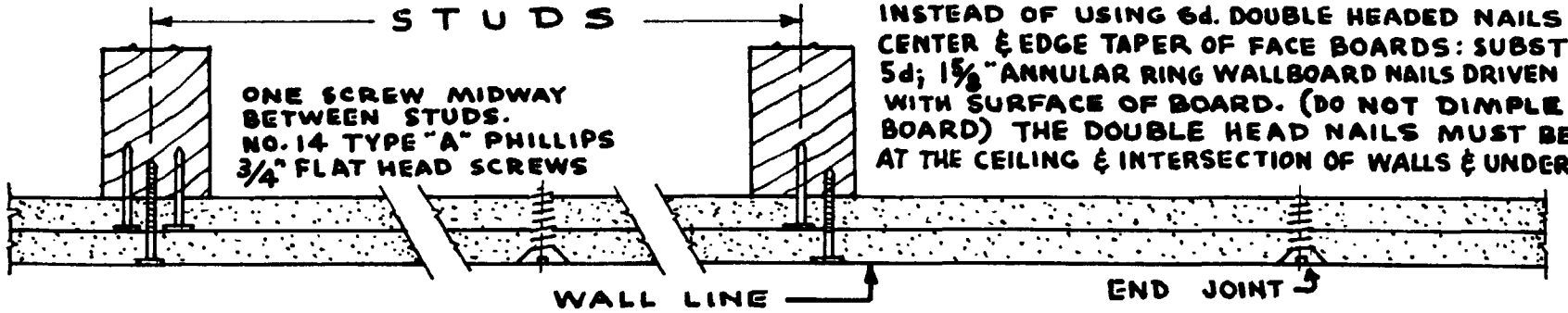

NOTE:
INSTEAD OF USING 6d. DOUBLE HEADED NAILS AT CENTER & EDGE TAPER OF FACE BOARDS: SUBSTITUTE 5d; 1 5/8" ANNULAR RING WALLBOARD NAILS DRIVEN FLUSH WITH SURFACE OF BOARD. (DO NOT DIMPLE THE BOARD) THE DOUBLE HEAD NAILS MUST BE USED AT THE CEILING & INTERSECTION OF WALLS & UNDER TRIM.

SGP 0027216

6-26-57

BESTWALL GYPSUM

BUILDING PRODUCTS

GYPSUM LATH AND PLASTER
LIME
FIRESTOP BESTWALL® GYPSUM WALLBOARD
GYPSUM WALLBOARD
GYPSUM SHEATHING
GYPSUM ROOF DECKS
JOINT SYSTEM
BEDDING COMPOUND
TOPPING COMPOUND
CERTEX TEXTURE
JOINT TAPE
SPACKLING COMPOUND
PATCHING PLASTER

For further information and details:

BESTWALL CERTAIN-TEED SALES CORPORATION
120 East Lancaster Ave.
Ardmore, Pennsylvania

DISTRICT SALES OFFICES

ATLANTA 3, GEORGIA
1010 Rhodes Haverty Building
134 Peachtree Street

CHICAGO 4, ILLINOIS
208 So. LaSalle Street

CHICAGO HEIGHTS, ILLINOIS
P. O. Box 302
10th & State Streets

CLEVELAND 14, OHIO
815 Superior Avenue

DALLAS 22, TEXAS
P. O. Box 6030

DES MOINES 9, IOWA
505 Fifth Avenue

DETROIT 4, MICHIGAN
305 Woodbrook Bldg.
5050 Joy Road

EAST ST. LOUIS, ILLINOIS
17th Street & Broadway

JACKSON 6, MISSISSIPPI
P. O. Box 4615
Fondren Station

KANSAS CITY 26, MISSOURI
1248 Crystal Street

MINNEAPOLIS 2, MINNESOTA
210 Frontenac Bldg.
509 Second Ave., South

BUFFALO 26, NEW YORK
P.O. Box 2608
Amherst Branch

RICHMOND 4, CALIFORNIA
1014 Chesley Avenue

SALT LAKE CITY 1, UTAH
119 West 2nd, South

TACOMA 2, WASHINGTON
1718 Thorne Road

WILMINGTON 3, DELAWARE
2011 Concord Pike

EXPORT OFFICE: 100 East 42nd Street, New York 17, New York

SGP 0027217

Printed in U.S.A.

BESTWALL

HUMMER SYSTEM
STRIP LAMINATION

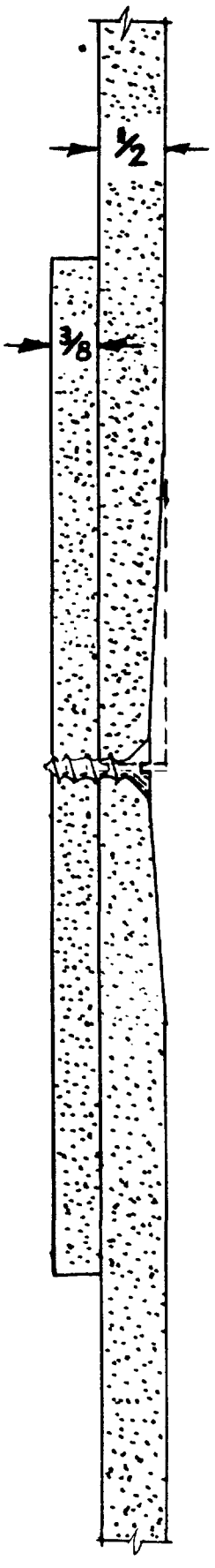

DESIGNED TO PREVENT

JOINT BEADING
Stops edge movement

DELAYED SHRINKAGE
By eliminating high edges with strip lamination and screws

NAIL POPS
With all nails and fastenings under tapes and trim

See your nearest Bestwall Gypsum Dealer.

Ask your Bestwall Certain-teed Salesman.

FIREPROOF GYPSUM BESTWALL BUILDING PRODUCTS

MANUFACTURED BY BESTWALL GYPSUM COMPANY

Sold through: Bestwall Certain-teed Sales Corporation
120 East Lancaster Avenue, Ardmore, Pa.

Form No. 5537

SGP 0027218

MATERIALS REQUIRED:

1. ½" Tapered Edge Bestwall Gypsum Wallboard.
2. Strips of ⅜" by 8" wide Bestwall Gypsum Wallboard.
3. ½" Tapered Edge Bestwall Gypsum Wallboard with Center Taper paralleling long edges of board.
4. Bestwall Hummer annular ring steel wire nail, 13 gauge, 1⅝" long, 15/64" flat head medium diamond point nails.
5. Blued plaster board nail, 1¼" long or longer.
6. ¾" Phillips flat head #14 wood screw threaded up to shoulders as manufactured by American Screw Company (Chicago), or equal.
7. 6-d double headed nails (Scaffold type nails).
8. Bestwall Joint System Cement or Bestwall Joint System Bedding Compound and Topping Compound, Paper Tape, and Bestwall Joint System Laminating Compound.

APPLICATION:

The plans for the building should be studied and a layout of 4' wide by 8' to 16' long board should be made with the board at right angles to the framing and the length of the board such as to reduce or eliminate end joints in the field of walls or ceilings. Where an end joint must be made in the field area of either wall or ceiling it should be made to fall midway between adjacent framing members (joists, rafters, or studs).

STRIPS:

8" wide strips of ⅜" gypsum wallboard spaced to fall under edge joints of the board and under the center of the wall board (maximum 2' on center) shall be applied first to the ceiling and then to the walls at right angles to the framing members. A strip shall be in both the wall and ceiling planes at the ceiling angles and at the floor in all walls. These strips may be 4" wide with 2 cut from a full 8" strip. Use two nails at each stud or joist on all strips regardless of width. Nail 1" from edge of strip and do not dimple board at nail head. A short 8" strip of ⅜" wallboard should be nailed to the two framing members, midway between the full length 8" strips, so as to fall beneath any end joint in the face layer not in a corner.

CEILING FACE LAYER:

½" Bestwall Tapered Edge Board with a Center Taper shall be used for the face layer on ceilings. The face layer shall be applied on the ceiling at right angles to the framing members, and in such a way as to have edges fall on the 8" strips. No edge joint nor end joint in the face layer shall fall over a nailing member. End joints shall be so installed as to fall midway between nailing members. These end joints will be reinforced by the short 8" strip filled in when stripping the ceiling.

Apply strips of Bestwall Laminating Compound to the backside of the face layer to match the strips of board in place and nail the face layer using 5-d, 1⅝" long, annular ring wallboard nails in the center taper and ⅜" from edges of board. As the sheets are installed and before the glue has set, drive Phillips head wood screws between nailing members in the center taper and in the tapered edge joint between two adjacent sheets. Use a special counter sink to make a hole for screw head and to start the screw. The screws should then be brought up and home with sufficient force and with the board so held that the screw head will be slightly countersunk and home tight when finished. Use a screw driver with an adjustable gauge for setting screws and holding face

REQUIRED TOOLS FOR THE APPLICATION OF BESTWALL - HUMMER SYSTEM "A" MODIFIED

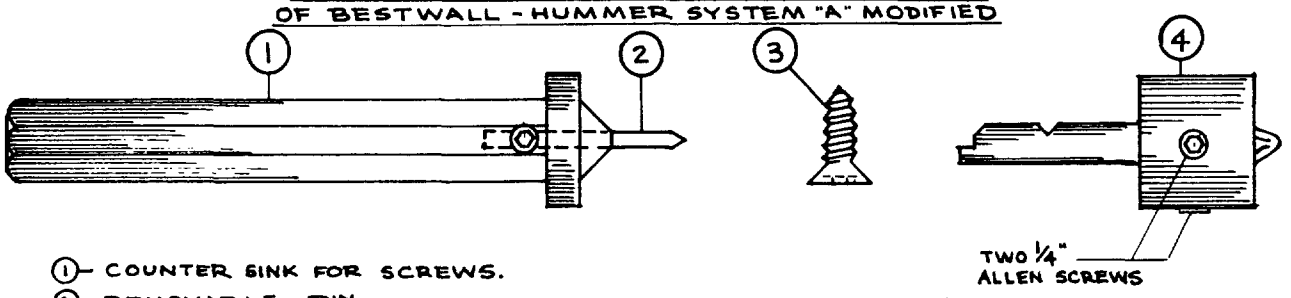

(1)- COUNTER SINK FOR SCREWS.
(2)- REMOVABLE PIN.
(3)- NO. 14 3/4" TYPE "A" PHILLIPS FLAT HEAD SCREWS AS MANUFACTURED BY AMERICAN SCREW CO. (CHICAGO, ILL.) OR EQUAL.
(4)- SCREW DRIVER WITH ADJUSTABLE GAUGE FOR SETTING SCREWS (YANKEE 313-3 PT/131A).

11-25-57

board tight to back board. Where a butt joint occurs in the field, Phillips head wood screws 12" on center shall be driven in the joint between the two ends just as along the tapered edges. For best results where mill cut ends are damaged about 1" should be cut off (cut face side) before it is installed where it will be at a butt joint in the wall or ceiling expanse (not at corners).

SIDEWALL FACE LAYER:

Regular ½" tapered edge board shall be used on walls. The face layer shall always be applied horizontally with the top sheet put in place first. Use strips of Bestwall Laminating Compound applied to the back of the face layer, at edges and in center of board. Nail the face layer in place using 5-d, 1⅝" long annular ring nails ⅜" from edge of board in center joint and also ½" from ceiling line and under base or trim. After the lower face layer is installed with end joints (if they occur) staggered, Phillips head wood screws shall be applied in tapered edge joints, between nailing members. End joints between sheets should fall midway between the nailing members and Phillips head wood screws should be driven in the joint 12" on center.

Where poor alignment of framing or nailing members holds the face layer from full contact with the base layer, double headed nails may be driven in the field of the board into the nailing members to hold face layer against back layer till glue sets.

For best results the face layer boards for the side walls should be stacked face side up on the floor for 12 hours before use with ¾" strips 40" apart under the long (closed) edges of the board and a weight in the center. When the board is nailed up, the slight bow will bring the center area snug against the center 8" strip and be held by the nails at the top and bottom of the sheet. This will help eliminate nails from center area of board. After glue has set (approximately 24 hours or at least over night) all double headed nails used shall be removed before joint system and tape is applied. Holes in the wallboard left by the nails not under a tape shall be slightly indented and subsequently filled with joint cement. The joints shall be finished in the standard way with joint cement and tape.

The decoration of the board shall be done in the manner used on a regular gypsum wallboard installation. For best results a skim coat of joint system cement should be used over the entire board area as the final application before priming for decoration. In applying the skim coat, the joint system cement should be mixed to a thin consistency and applied to the entire board surface with a 12" wide knife or with a wide roller, and then sheared down tightly with the wide knife. With skill this application properly made not only can eliminate sanding, but also will tend to equalize suction over the entire board area, reduce or eliminate slight shrinkage differences that may occur if a shear coat is not applied, and level off slight imperfections that may be present that are seldom noticed in the board's surface until after it has been decorated.

ADVANTAGES & COST COMPARISON:

This method of installation does two things of great importance in wallboard installation. It eliminates any fastening device, screw or nail which is in the exposed face layer from contact with or penetration into any wood members which are not under joint system and tape. By eliminating the basic cause of nail popping (fastener in wood not under joint system and tape) this one feature practically eliminates all possibility of this serious complaint. Insofar as the photographing of screw or nail heads is concerned, which is a discoloration due to a tempearture differential across the surface, a quality construction including laminated wall construction will invariably include building insulation in the joist and stud spaces. This insulation will reduce or eliminate the temperature differential between the screw or nail head and the surrounding surface with the result that there is no spotting over these areas. The joint treatment putting all of the screw and nail heads under a paper tape and cement is an added protection against "popping" or "spotting" of the heads. Cutting off a minimum of 1" from the manufactured end of the wallboard sheets meeting in the field of the wall or ceiling insures hard ends without paper split. This act with the lamination of the face layer to the back strips eliminates the major factors which contribute to beading or ridging at joints.

A Bestwall Hummer System strip laminated installation will produce a pleasing, trouble free, surface. Compared with a conventional ½" gypsum wallboard application, the additional cost is minor. Based on a house 24' x 36' (average 5½ rooms), the additional cost is:

FOR CEILINGS:	Unit Cost	Total Cost	
450 lineal ft., 8" wide strips (including 4" strips at ceiling edge) — 300 sq. ft.	—	$15.00	
Labor for stripping — 3 hrs.	$3.00	9.00	
800 sq. ft. center tape board (extra cost)	0.002	1.60	
Laminating Compound — 5#	0.20	1.00	
Labor applying Laminating Componnd — 1 hr.	3.00	3.00	
350 — #14 ¾" Phillips Screws	1.25	4.40	
Labor Cost 350 screws (400 per hr.) — 1 hr.	3.00	3.00	
			$36.90
FOR WALLS:			
1260 lineal ft., 8" wide strips (including 4" strips at ceiling and floor) — 840 sq. ft.	—	$42.00	
Labor for stripping — 5 hrs.	$3.00	15.00	
Laminating Compound — 15#	0.20	3.00	
Labor applying Laminating Compound — 2 hrs.	3.00	6.00	
150, #14 ¾" Phillips Screws	1.25	1.90	
Labor Cost 150 Screws (400 per hr.) — ½ hr.	3.00	1.50	
			$69.40
TOTAL FOR HOUSE			$106.30

With savings by improved techniques and eliminating going back to repair "pops" or joint "beads", Bestwall Hummer System Strip Lamination is cheaper than a conventional two layer application. In comparison with the method requiring glue and back up of all joints with special bracing in erection, there is little difference in cost in place, yet the finished wall closely matches a complete double layer installation. The following sheets give the specifications in detail.

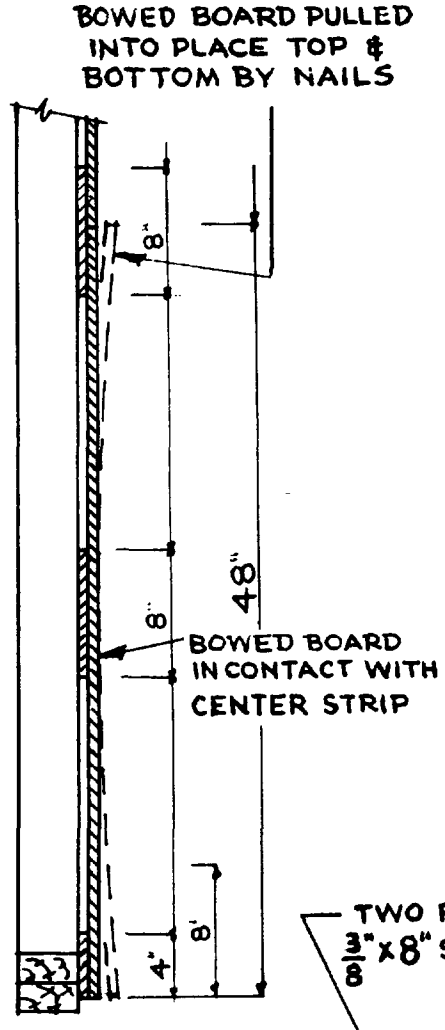

NAILING BOWED BOARD ON WALLS

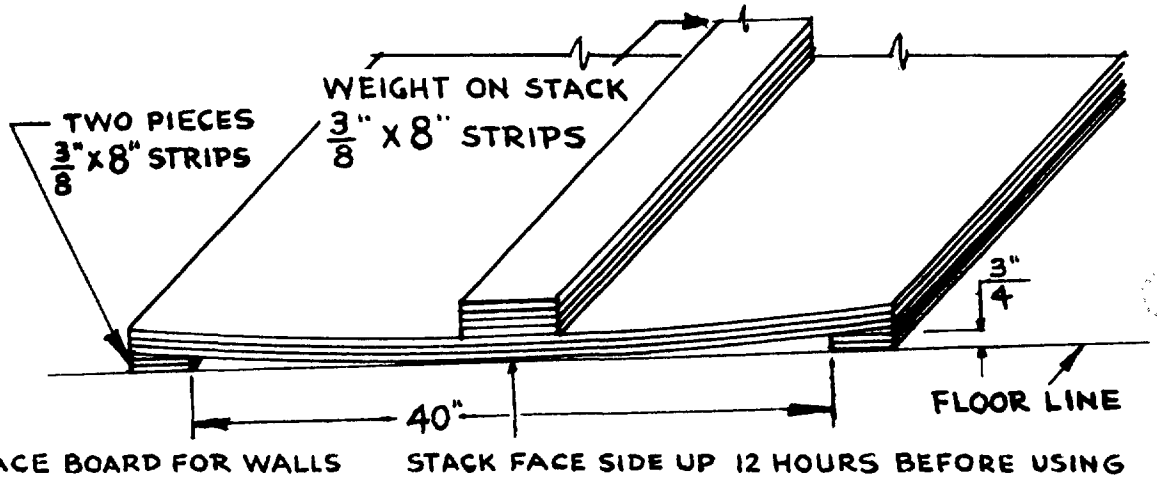

BOWING FACE BOARD FOR WALLS

STACK FACE SIDE UP 12 HOURS BEFORE USING

SGP 0027221

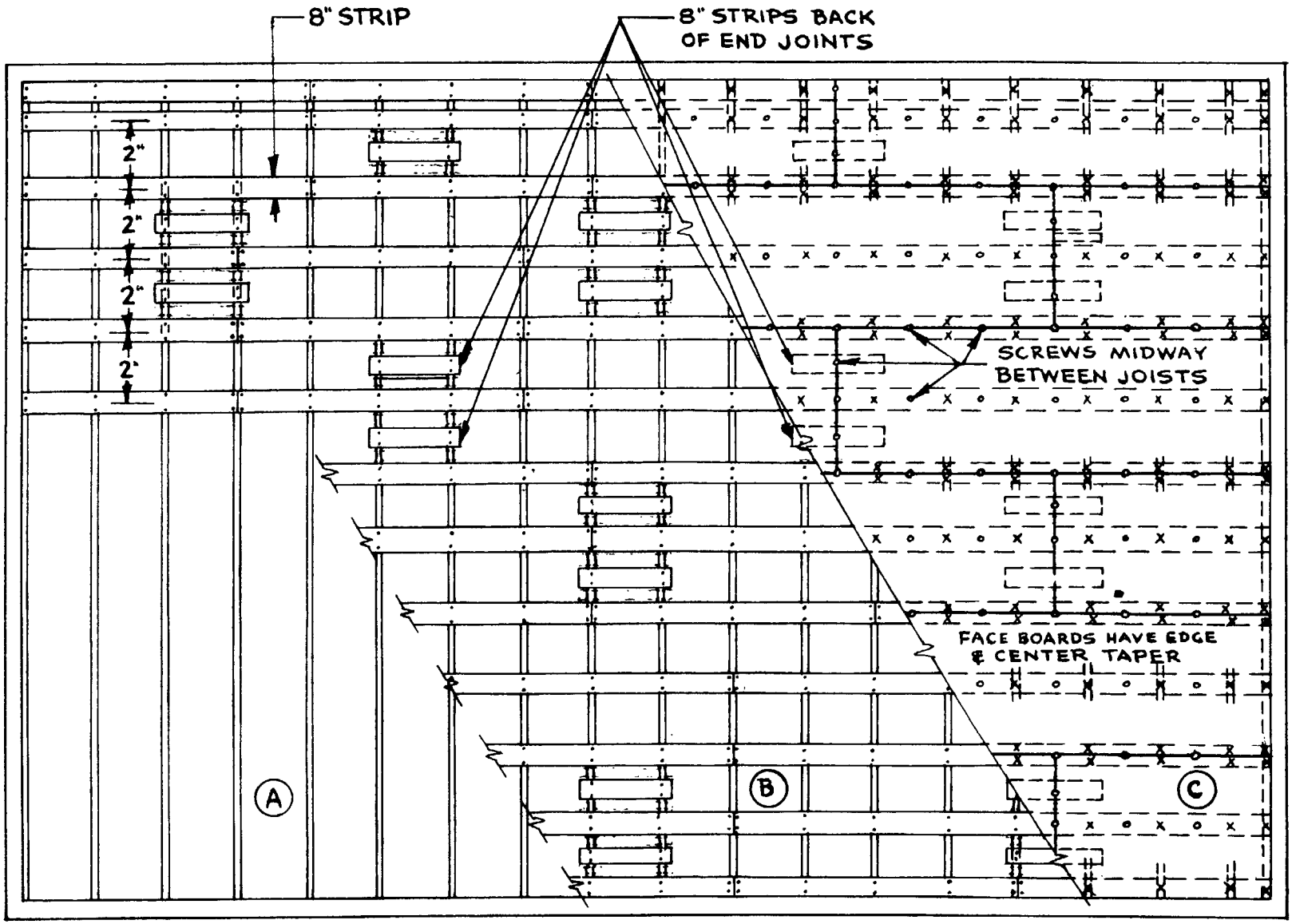

A - EXPOSED CEILING JOISTS

B - 3/8 x 8" GYPSUM BOARD STRIPS

C - 1/2" BESTWALL GYPSUM WALLBOARD CENTER & EDGE TAPER

REFLECTED CEILING PLAN AS SHOWN ON ROOMS

(•) BLUED PLASTER BOARD NAIL 1 1/4" LONG

(x) 5d - 1 5/8 ANNULAR RING WALLBOARD NAILS

(•) 3/4 Nº 14 PHILLIPS HD. WOOD SCREWS

BESTWALL HUMMER SYSTEM

STRIP LAMINATION 11-25-57

SGP 0027222

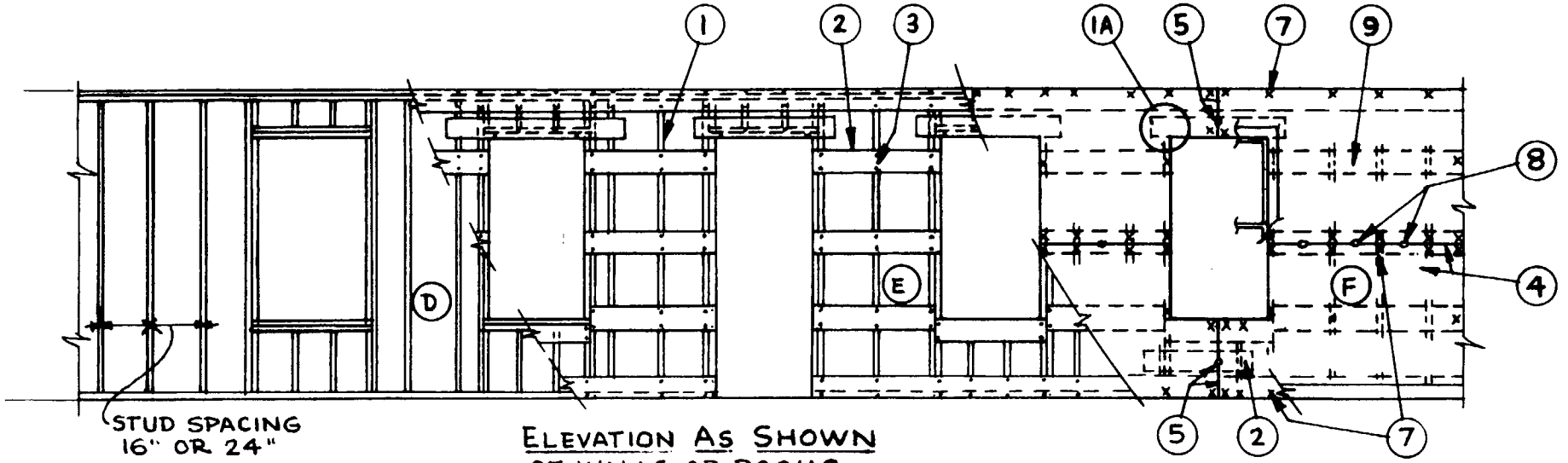

ELEVATION AS SHOWN
OF WALLS OR ROOMS

D - EXPOSED STUDS E - 8" GYPSUM BOARD STRIPS OVER STUDS F - FACE BOARD OVER STRIPS

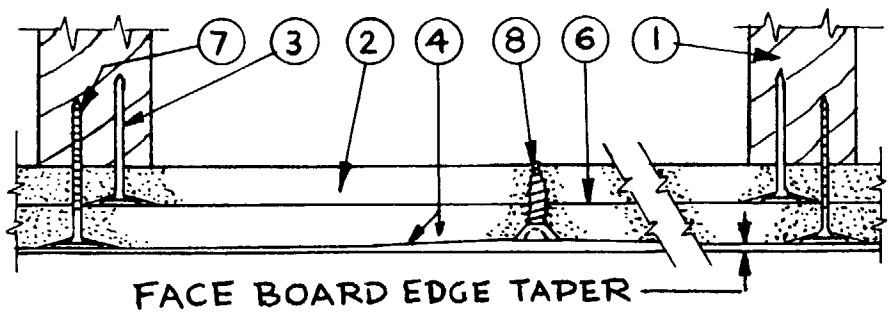

FACE BOARD EDGE TAPER

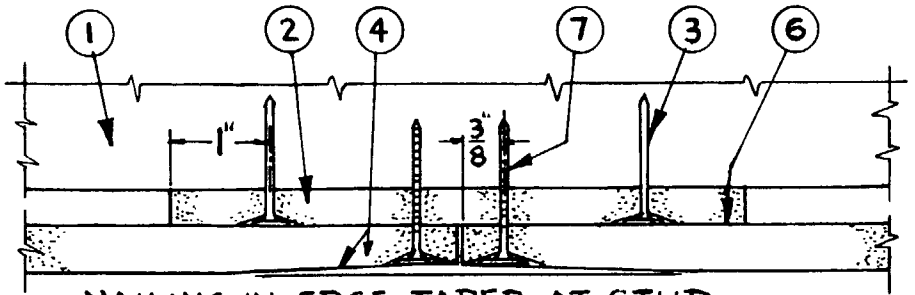

NAILING IN EDGE TAPER AT STUD

1 - STUD 1A - NO JOINTS OR NAILING

2 - 3/8" X 8" GYPSUM WALLBOARD STRIPS.

3 - BLUED PLASTER BOARD NAIL 1 1/4" LONG - 1" FROM EDGES.

4 - BESTWALL GYPSUM WALLBOARD TAPERED EDGE FACE BOARD.

5 - END JOINT IN FACEBOARD AND PHILLIPS HEAD WOOD SCREWS MIDWAY BETWEEN STUDS.

6 - BESTWALL LAMINATING COMPOUND.

7 - 5d - 1 5/8" ANNULAR RING WALLBOARD NAILS UNDER TAPE OR TRIM, DRIVEN TIGHT - NO DIMPLE.

8 - #14 TYPE A PHILLIPS HEAD 3/4" LONG WOOD SCREWS MIDWAY BETWEEN STUDS.

9 - PRESS BOARD IN THIS AREA AS NAILS AND SCREWS ARE DRIVEN.

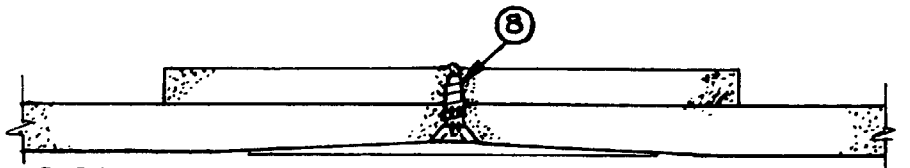

SCREW IN EDGE TAPER MIDWAY BETWEEN STUDS

BESTWALL HUMMER SYSTEM STRIP LAMINATION

11-25-57

SGP 0027223

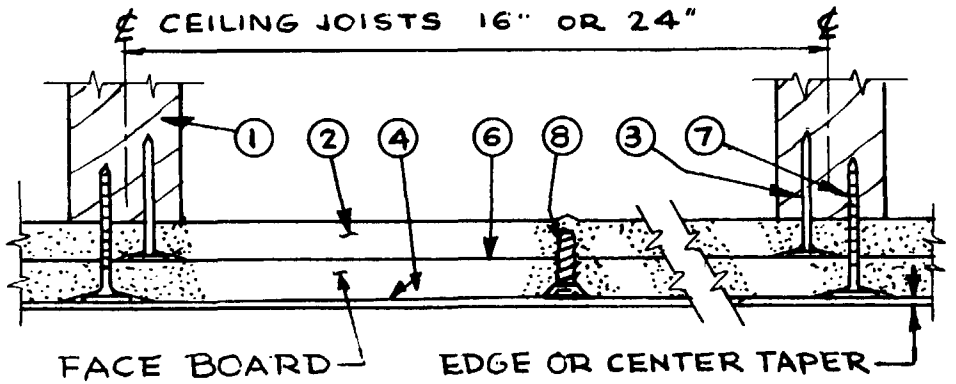

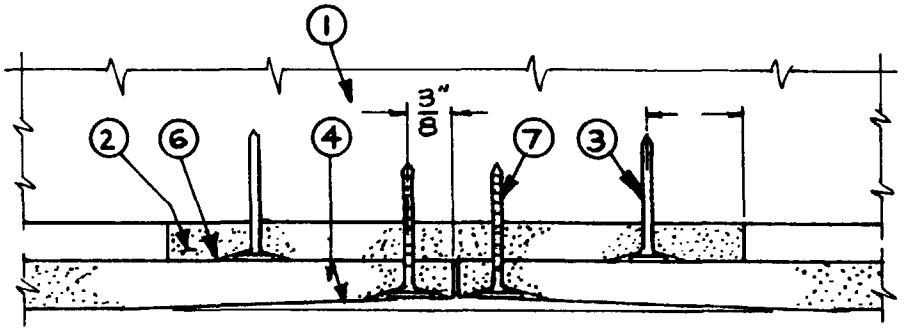

EDGE TAPER AT JOIST

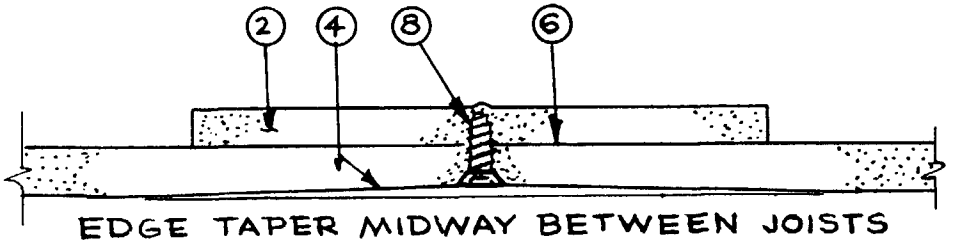

EDGE TAPER MIDWAY BETWEEN JOISTS

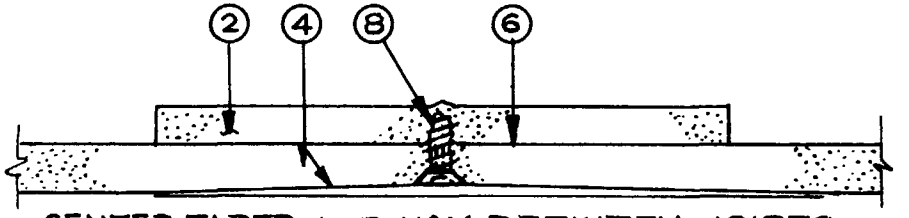

CENTER TAPER MIDWAY BETWEEN JOISTS

SECTIONS THROUGH CEILING

1- CEILING JOIST (OR BOTTOM CHORD OF ROOF TRUSS).

2- 3/8" GYPSUM BOARD STRIPS.

3- BLUED PLASTER BOARD NAIL 1 1/4" LONG - 1" FROM EDGE - NO DIMPLE.

4- 1/2" BESTWALL GYPSUM WALLBOARD EDGE & CENTER TAPER.

5- NOT USED.

6- BESTWALL LAMINATING COMPOUND.

7- 5d - 1 5/8" ANNULAR RING WALLBOARD NAIL UNDER TAPE 3/8" FROM EDGE & IN CENTER TAPE - DRIVEN TIGHT - NO DIMPLES.

8- #14 TYPE A PHILLIPS HEAD 3/4" LONG FLAT HEAD WOOD SCREWS MIDWAY BETWEEN JOISTS.

- USE COUNTER SINK TO START AND INDENT PAPER FOR HEAD. DRIVE SCREW HEADS FLUSH WITH SURFACE, THEN WITH FACE BOARD PRESS TIGHTLY TO BACK STRIPS. DRAW SCREW HEAD BELOW SURFACE OF THE BOARD.

BESTWALL HUMMER SYSTEM STRIP LAMINATION 11-25-57

SGP 0027224

BESTWALL GYPSUM

BUILDING PRODUCTS

GYPSUM LATH AND PLASTER
LIME
FIRESTOP BESTWALL® GYPSUM WALLBOARD
GYPSUM WALLBOARD
GYPSUM SHEATHING
GYPSUM ROOF DECKS
JOINT SYSTEM
BEDDING COMPOUND
TOPPING COMPOUND
CERTEX TEXTURE
JOINT TAPE
SPACKLING COMPOUND
PATCHING PLASTER

For further information and details:

BESTWALL CERTAIN-TEED SALES CORPORATION
120 East Lancaster Ave.
Ardmore, Pennsylvania

DISTRICT SALES OFFICES

ATLANTA 3, GEORGIA
1010 Rhodes Haverty Building
134 Peachtree Street

BUFFALO 26, NEW YORK
P.O. Box 2608
Amherst Branch

CHICAGO 4, ILLINOIS
208 So. LaSalle Street

CHICAGO HEIGHTS, ILLINOIS
P. O. Box 302
10th & State Streets

CLEVELAND 14, OHIO
815 Superior Avenue

DALLAS 22, TEXAS
P. O. Box 6030

DES MOINES 9, IOWA
505 Fifth Avenue

DETROIT 4, MICHIGAN
305 Woodbrook Bldg.
5050 Joy Road

EAST ST. LOUIS, ILLINOIS
17th Street & Broadway

JACKSON 6, MISSISSIPPI
P. O. Box 4615
Fondren Station

KANSAS CITY 26, MISSOURI
1248 Crystal Street

MINNEAPOLIS 2, MINNESOTA
210 Frontenac Bldg.
509 Second Ave., South

RICHMOND 4, CALIFORNIA
1014 Chesley Avenue

SALT LAKE CITY 1, UTAH
119 West 2nd, South

TACOMA 2, WASHINGTON
1718 Thorne Road

WILMINGTON 3, DELAWARE
2011 Concord Pike

EXPORT OFFICE: 100 East 42nd Street, New York 17, New York

SGP 0027225

5M-4-58

Printed in U.S.A.

BESTWALL

HUMMER SYSTEM

"B" MODIFIED

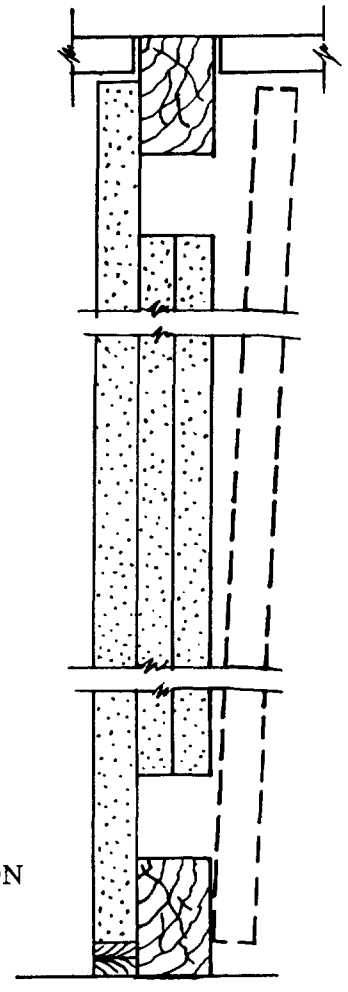

A NON LOAD BEARING THIN
GYPSUM WALLBOARD PARTITION

LOW COST
SPEEDY CONSTRUCTION
FIRE RESISTANCE
1, 2 OR 3 HOURS

See your nearest Bestwall Gypsum Dealer.

Ask your Bestwall Certain-teed Salesman.

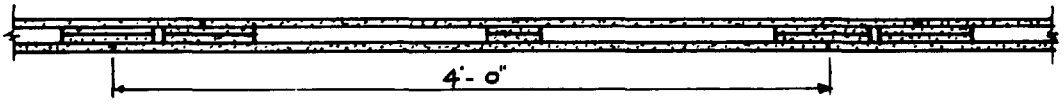

FIREPROOF GYPSUM BESTWALL BUILDING PRODUCTS

MANUFACTURED BY BESTWALL GYPSUM COMPANY

Ardmore, Pa.

SGP 0027226

MATERIALS REQUIRED:

1. 5/8" Firestop Bestwall Tapered Edge Gypsum Wallboard.
2. Gypsum Wallboard Studs laminated in plant (or on job).
   (a) 2 layers 1/2" (or 3/8", or 5/8") thick, 3 1/2" x 8'.
   (b) 2 layers 1/2" (or 3/8", or 5/8") thick, 6 1/4" x 8'.
3. 1", 1 1/2", and 2" Phillips flat head #14 wood screws. (as manufactured by American Screw Company, Chicago, Ill., or equal.)
4. Nails, Rawl type drives, screws, etc., as shown in details.
5. Bestwall Joint System Materials including Cement, Bedding Compound, Topping Compound, Tape, Laminating Compound and Certex Texture.
6. Metal and/or wood: door frames, runners, trim, caps, etc., as per architectural details (similar to those shown in Bestwall Hummer System "B" Modified Booklet.)

APPLICATION:

GENERAL NOTES

The plans for the building should be studied and a layout made to determine corner and wall intersections, door openings, location of conduits within the wall, necessary temporary bracing, and the order of installation. With experience and care the work can be expedited and the loss due to cut pieces necessary to make intersections shown by the architectural plans reduced to a minimum.

The actual layout of the partitions, installation of floor and ceiling runners, setting of door frames, hanging doors, trimming (including openings, floor and ceiling) mentioned in the following specifications and shown on the detail sheets are generally included in new construction, in the carpentry sub-contract. Decoration mentioned in the concluding section is generally included in the painting sub-contract. Any contract based on the following specifications should clearly stipulate the responsibility of the wallboard or partition contract. A contract for partitions only, in existing buildings, may cover all the work in one agreement.

CEILINGS

Ceiling installations aren't covered under the Bestwall Hummer System "B" Modified Specifications since these are for walls and partitions only. Where ceilings are to be installed, it is suggested that to correspond with the economies possible with "B" Modified, a Bestwall Hummer Strip Lamination gypsum wallboard installation be made. Where acoustical treatment or other installation is desired, the owner and architect should make the specifications for the particular installation required.

OLD WORK

The "B" Modified System partition may be used in an existing building regardless of the ceilings, whether they are plastered, wallboard, concrete or acoustical treatment or the construction of the walls. Suggested details following this specification show how to treat different conditions.

PANEL ASSEMBLY

Assemble one half of the laminated wall panel as shown on page 4. Use three 2" x 4"s as a base for the assembly with a 1/8" crown (do not exceed 1/8"). See details page 4. Use this same type base to stack 5/8" Firestop board for other side of panels.

Mix Bestwall Laminating Compound to a consistency that the combed ridges will not self level when the board is in a vertical position (approximately 2 3/4 pounds per 1 gallon of water). Apply the laminating compound to three sets of ribs (a set is 3 ribs, 6 1/4", 3 1/2" and 6 1/4" wide) with a 12" spreader as shown on page 4 (one side only at this time).

Place the ribs as shown building a stack about 4 feet in height using the gauge blocks to space ribs each time. A 3" strip of the laminating compound should be scraped off the 6 1/4" rib that in place, extends over the board 2 3/4". Weigh down the stack of panels with several bundles of board and leave set for at least 12 hours before using.

SGP 0027227

Do not leave a stack or a panel more than 10 minutes without weighting it down. Do not take panels from stack until they are placed in wall.

INTERIOR PARTITIONS

Lay out the partitions on the floor and install floor runner. Where there is a wood sub-floor, the runner may be nailed in place with a 10D nail. If there is a concrete floor, the wood runner should be predrilled and concrete nails used or screws with plugs or shields set in the floor. The fasteners should be every two feet. Where the partition extends to the ceiling and is to be fastened, the top runner shall be plumbed up over the floor runner and fastened in place. (For metal runners use short concrete nails in flanges on floor.)

Where metal door frames are used they shall be set in place and braced. Other type doors shall be located and all openings noted.

Begin erection at starting point, whether it is an outer wall, a column or a corridor intersection as determined from an over-all study of the floor plans.

NOTE: Where the ceiling is being installed at the same time as the walls as in new construction, nailers shall be provided over the partition if it is not at right angles to framing in the ceiling nor directly under a framing member. These nailers shall be 2" x 4"s, 24" on center and fastened firmly to framing with face in plane of framing.

ERECTING FIRST HALF PANEL

Apply Bestwall Laminating Compound with the comb spreader (box type shown on page 11) to the 3¼" lap joint before placing panel in the wall. Nail panel to the top and bottom runners with 1⅝" Bestwall Hummer Annular ring nails spaced 12" on center. Nail top of board within ¾" of the ceiling which will bring it under joint tape or trim. Do not dimple board for nail head at these points. With metal runners use 1" long #14 Phillips flat head wood screws 12" on center.

Reinforce joint between panels by using 1½" long Phillips flat head wood screws ¾" from edge of board in taper, 12" from the floor and from the ceiling and spaced 24" on center between. Use countersink for screw heads and drill ¼" hole through first layer before setting screws. Draw head of screws 1/32" below surface. See details page 5.

ELECTRIC WIRING

All electric work shall be under the electrical sub-contract.
Rigid conduit can be installed after the first side of the partition is in place, and run in the core space vertically and along the top and bottom of the panels in the space left by holding the core strips back. Where the O.D. of the conduit requires added space, 1¼" ribs (2 strips ⅝" board) should be used. This will result in a 2½" thick wall and runners, door frames, and trim should be specified properly. (See page 9) The opposite side of the panel is set in place after the rigid conduit is installed.

Flexible conduit can be installed in the completed wall from the floor or the ceiling in the 1" core space. Outlet and switch boxes (shallowtype) shall be installed as detailed on page 9. The board shall be cut clean and neatly for the box.

ERECTING SECOND (OPPOSITE) FACE BOARD

Apply strips of Bestwall Laminating Compound to back of face board with box type comb spreader where board comes in contact with laminated ribs in place. Fasten this face board in place at top and bottom in the same manner the first side was placed. Be sure to offset the edges in the second sheet so that the vertical joints in the finished wall do not fall one over the other (see page 5).

After two of the second face sheets are up, reinforce the joint and hold the boards in tight contact until the laminating compound has set by using 1½" long Phillips flat head wood screws in the joint 12" from the top and the floor and spaced 24" on center between. Use a countersink for screw heads before starting screws. Draw head of screw 1/32" below surface.

FIRE RATED WALLS, 1, 2, AND 3 HOURS (NONLOAD BEARING)

The 2¼" wall described above with certain additional fastenings (closer spacing) is listed by Underwriters' Laboratories as 1 Hour Fire Resistive (see Bestwall detail plan sheet #5583 — "Firestop Bestwall — Gypsum Wallboard One Hour Nonload Bearing Studless Wall").

Adding another layer of 5/8" board on each side of the partition with two runners and making the two sides independent results in a wall 4" thick which is listed by Underwriters' Laboratories as 2 Hour Fire Resistive (see detail plan sheet #5584 — "Firestop Bestwall Gypsum — 2 Hour Nonload Bearing Studless Wall").

Separating the two double layer faces by another inch making a wall 5" thick gives a wall section listed by Underwriters' Laboratories as 3 Hour Fire Resistive (see Bestwall detail plan sheet #5585 — "Firestop Bestwall Gypsum 3 Hours Nonload Bearing Studless Wall").

DOOR OPENINGS

Fill in core space around door and other openings in the wall with 6¼" rib covered on both sides with laminating compound. Drive wood clamps in place immediately and leave for at least 12 hours. After clamps are removed, the doors and jambs (hang door and trim one side on bench) shall be set in openings and trimmed and the base and ceiling molding nailed in place. See details page 6.

If metal door frames are in sections they may be set after the walls are in place and the core space filled. Generally, however, metal door frames are a unit which must be set before the wall. In this case, the walls must be erected with one wall first and set into the frame, then a 6¼" filler set around the door, and finally the other face set. Wood shims with fast setting mastic against metal shall be inserted around the metal frame to wedge it tightly in place. Use joint cement to fill the crack completely. See details page 7.

SELF FURRING WALLS

(A) OUTSIDE WALLS

Page 10 shows application of half of Bestwall Hummer System "B" Modified panels with ribs as a self furring wall. The only contact with the outside masonry wall is the no-drip shims nailed to the panel to prevent any water seepage through the outside wall coming in contact with the inner wall (gypsum board panels). A small shim made of cut squares of roofing (210# uniform thick) as detailed on page 10 is used. Additional shimming may be needed to true up wall.

(B) INTERIOR WALLS

The same details may be used over masonry interior walls. The panels are attached at the ribs to the masonry wall with Rawl type drives or suitable fastenings.

DETAILS SHOWN ON PAGES 4 THROUGH 10 INDICATE VARIATIONS FOR DIFFERENT JOB CONDITIONS.

CAUTION: All nails, screws or fastenings are under tape and joint finish or trim. The boards should not be dimpled when nailing under tapes and joint finish.

All screws should be drawn tightly so the head is about 1/32" below the face of the board.

JOINT WORK

Apply Bestwall Bedding compound or joint system cement to the taper edge joints and screw heads, shear off surplus, leaving no material on high edges. Allow to dry 12 hours before taping, leaving a uniform depth of taper for uniform shrinkage of joint finishes over and under tapes.

Apply Bestwall Bedding compound or joint system cement and bed tapes leaving a uniform thickness of material under the tapes.

When Bedding Compound or joint system cement has whitened (surface dry or dry) cover taped joint with Bestwall Topping Compound. Shear off surplus, leaving a uniform coverage over tapes with edges well feathered.

The Bedding Compound or joint system cement under the tapes and first coverage of tapes with Topping Compound must be thoroughly dry before the next (2nd) coverage of the joint.

Cover joints a second time with Topping Compound, shear off surplus, leaving a smooth, well feathered joint. For best results and a more uniform suction over entire area, apply a skim coat over the surface of the board and joints and shear off tight in lieu of second application of topping.

DECORATION

Where a skim coat has been used to finish the wall board, a one coat paint application may be satisfactory. For best results use a prime coat over wallboard area before final decoration.

SGP 0027229

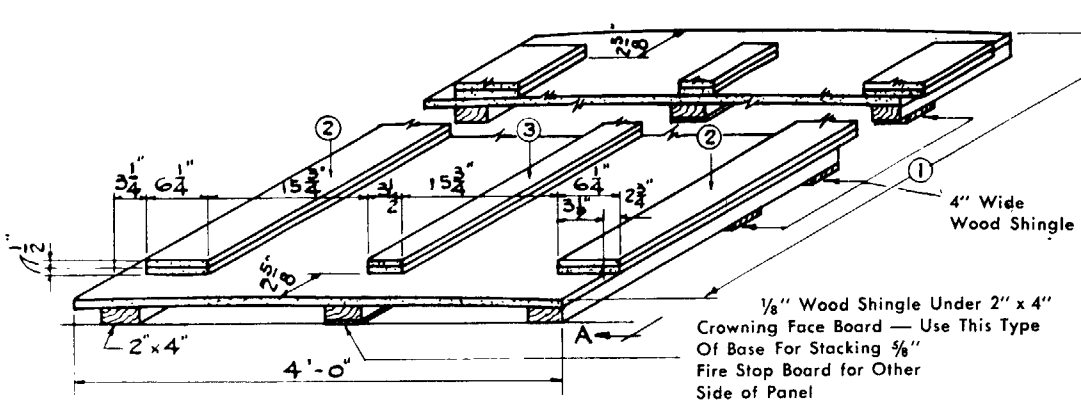

ASSEMBLY OF ONE-HALF OF ONE LAMINATED WALL PANEL

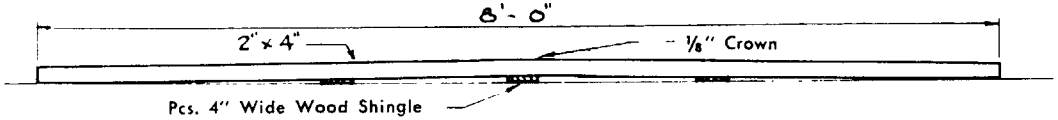

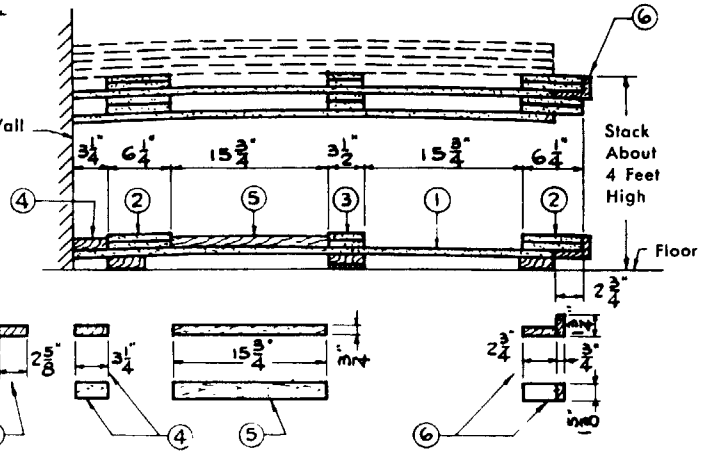

GAUGE BLOCK LOCATION

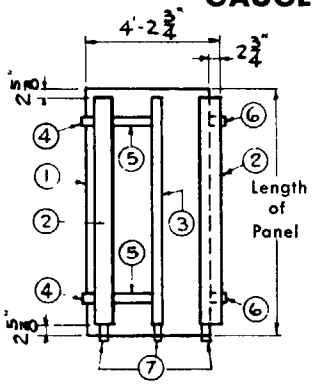

PLAN VIEW

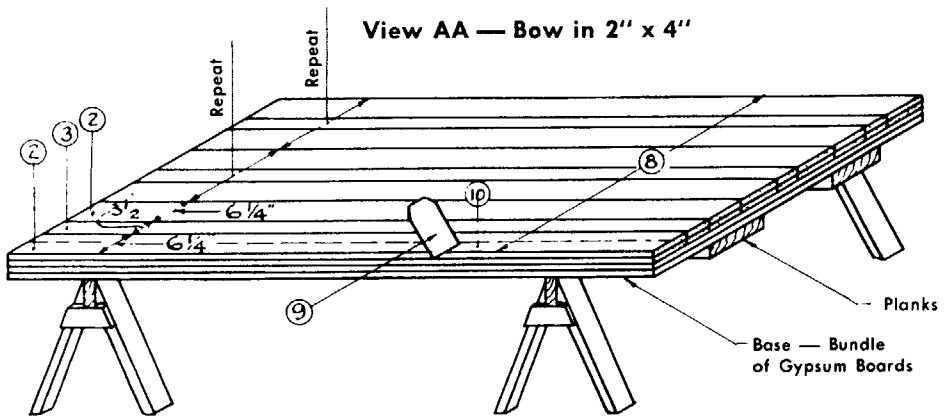

1. 5/8" Firestop Bestwall Gypsum Board
2. Gypsum Rib 6 1/4" Wide
3. Gypsum Rib 3 1/2" Wide
4. Gauge Block
5. Gauge Block
6. Gauge Block
7. Gauge Block
8. Laminating Compound Applied on Surface
9. Laminating Compound Scraper
10. 3" Strip Cleaned of Laminating Compound

APPLICATION OF LAMINATING COMPOUND TO RIBS

BESTWALL

HUMMER SYSTEM "B" MODIFIED
Panel Construction Details
January, 1959 Sheet 1

SGP 0027230

4

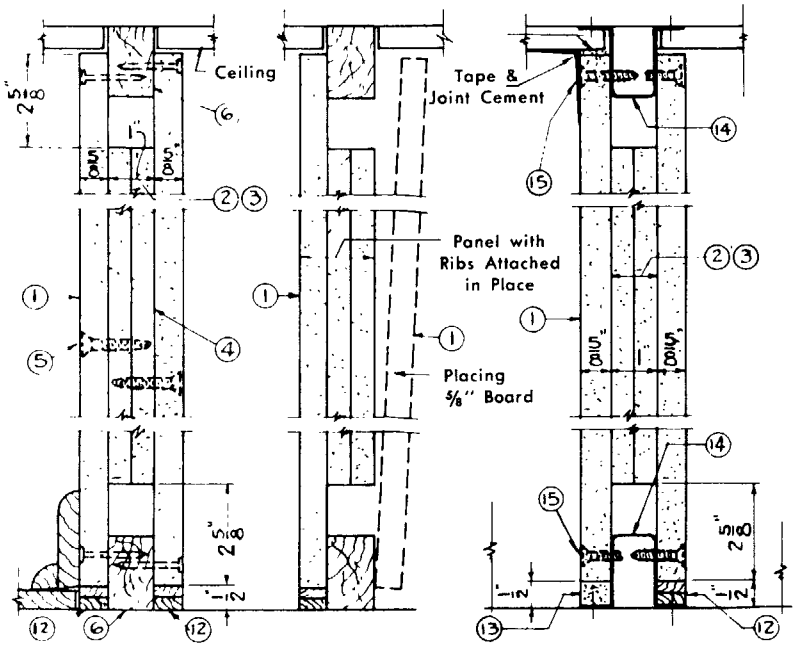

Wood Runners

Metal Runners

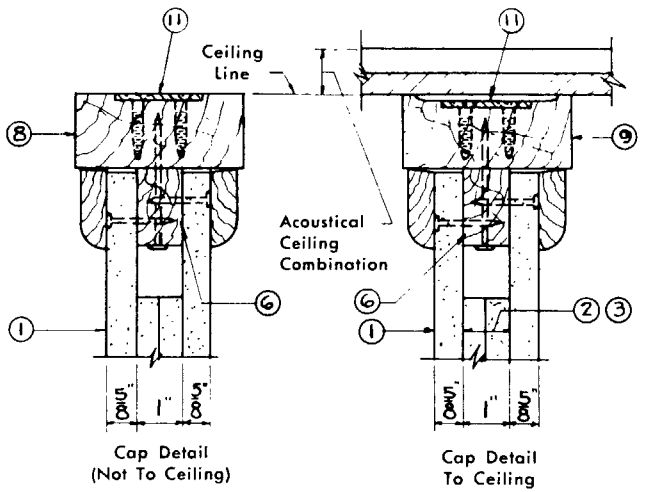

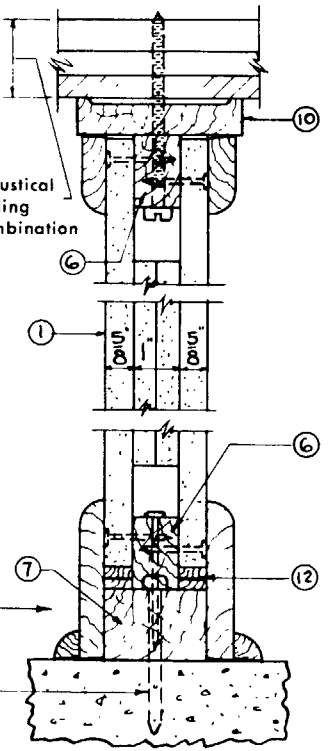

CEILING & FLOOR DETAILS

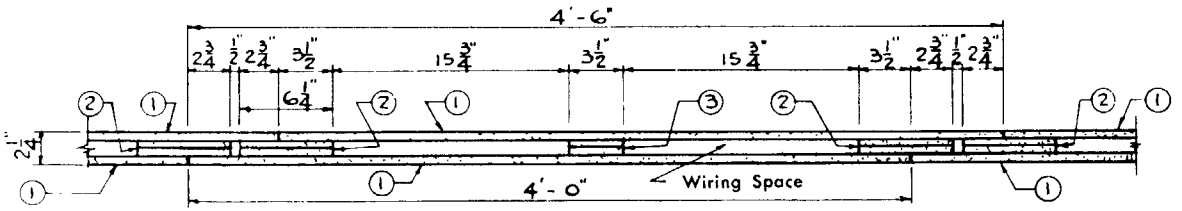

ASSEMBLED LAMINATED PANEL

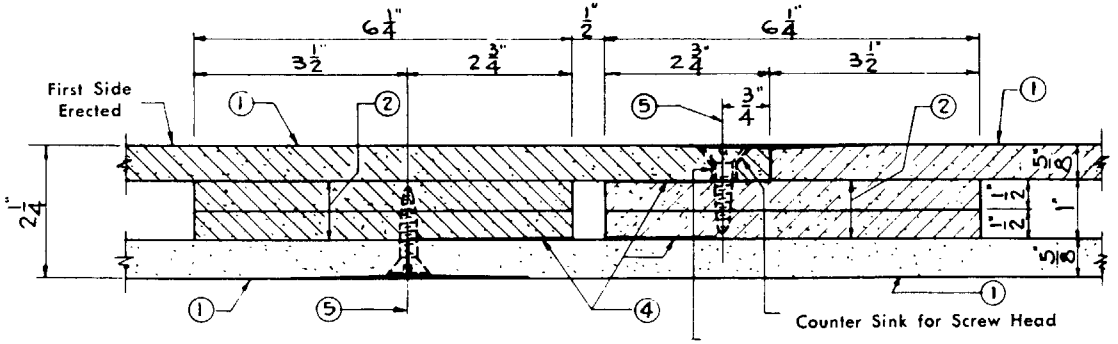

LAP JOINT DETAIL

¼" Bored Hole Thru 5/8" Board

1. 5/8" Firestop Bestwall Gypsum Board
2. Gypsum Ribs 6¼" Wide
3. Gypsum Rib 3½" Wide
4. Bestwall Laminating Compound
5. No. 14 Phillips Flat Head Screws, 1½" Long, 24" O.C., Under Tape & Finish— Head 1/32" Below Surface
6. 1" x 1⅝" Wood Runner Ceiling and Floor
7. 1⅝" x 2¼" Wood Runners,
8. 1⅝" x 3⅝" Wood Cap
9. 1⅝" x 3⅝" Wood Cap
10. ⅞" x 3⅝" Wood Cap
11. ⅛" x 2" Steel Bars, Where Required
12. Wood Wedges (Cut From Shingles) Remove Wedges If Space Is Grouted-In
13. Plaster Grout
14. No. 24 U. S. Gage Sheet Metal Channels
15. No. 14 Phillips Flat Head Screws 12" O.C., 1" Long

BESTWALL

HUMMER SYSTEM "B" MODIFIED

Panel Erection & Details

January, 1959 Sheet 2

5

SGP 0027231

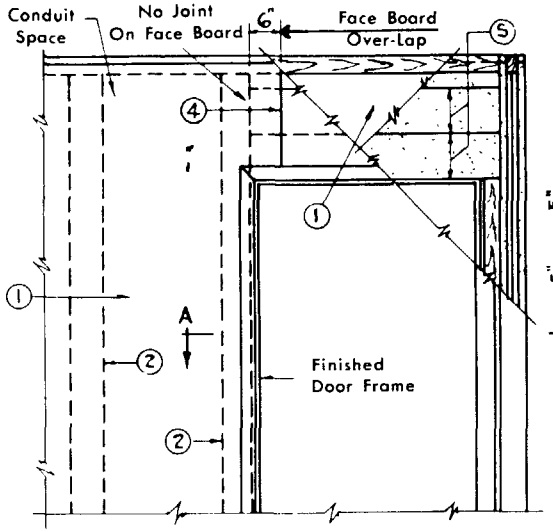

ELEVATION — UPPER PART OF DOOR OPENING

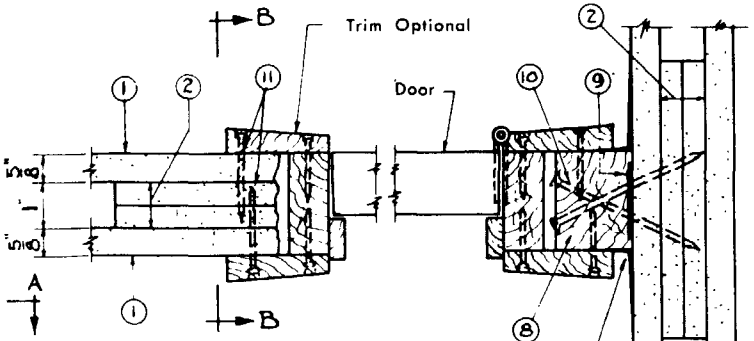

VIEW — AA

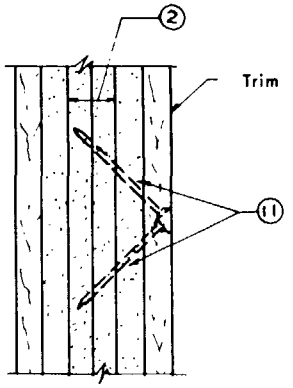

VIEW — BB

NOTE:
For Rigid Conduit Where Core Must Be 1¼", Overall Wall Is 2½". Door Jams Must Be Proper Width.

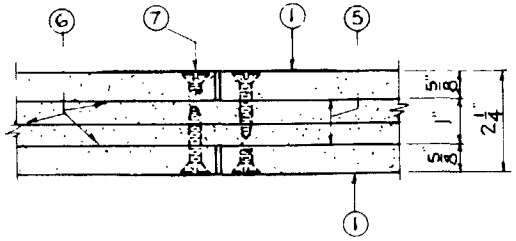

JOINT OVER DOOR OPENING

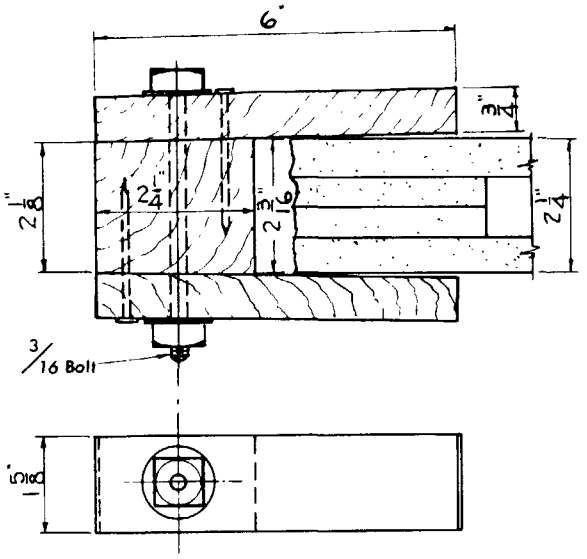

DETAIL OF WOOD DOOR CLAMP

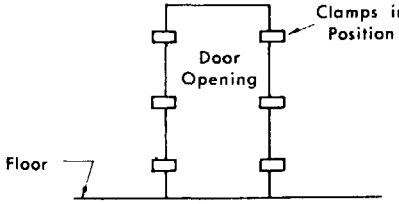

CLAMP LOCATION

1. ⅝" Firestop Bestwall Gypsum Board
2. Gypsum Rib 6¼" Wide
3. Gypsum Rib 3½" Wide
4. Joint Over Door (Cut Board)
5. Fill In with 6¼" x 1" Gypsum Ribs
6. Laminating Compound
7. No. 14 Phillips Flat Head Screws, 1½" Long
8. 1⅝" x 2¼" Wood Buck
9. Laminating Compound
10. 10d, 3" Long Finishing Nails
11. 8d Finishing Nails
12. Tape and Joint Cement

BESTWALL

HUMMER SYSTEM "B" MODIFIED
Wood Door Framing Details
January, 1959 Sheet 3

SGP 0027232

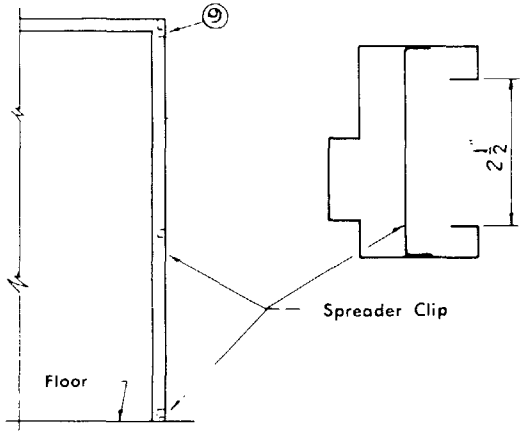

METAL DOOR FRAME

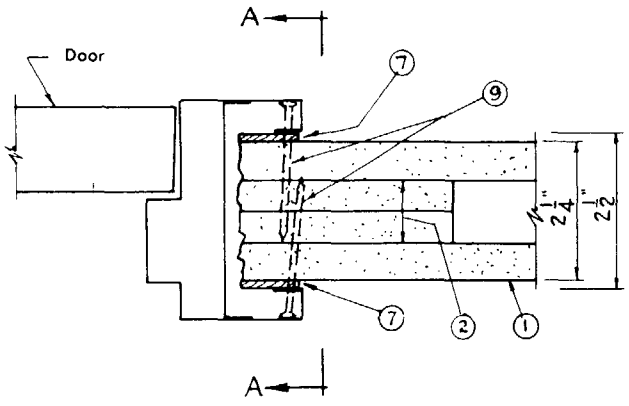

METAL DOOR FRAME SECTION

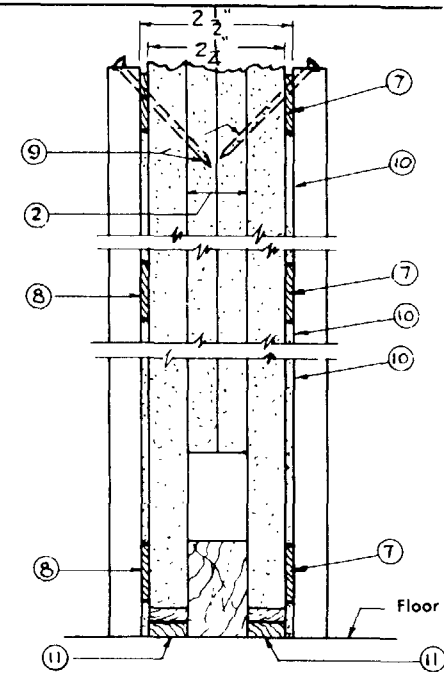

VIEW — AA

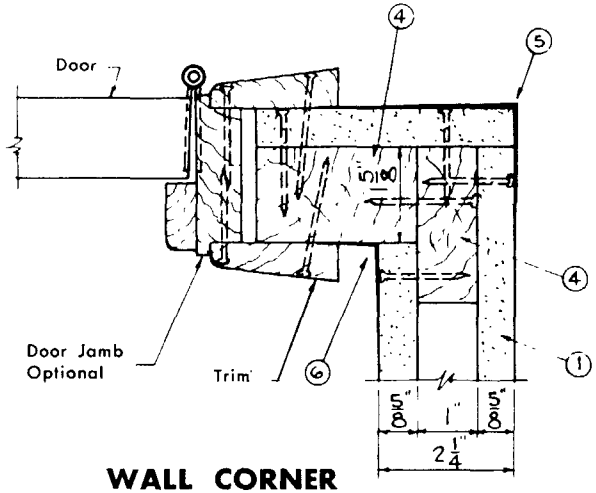

WALL CORNER DETAIL

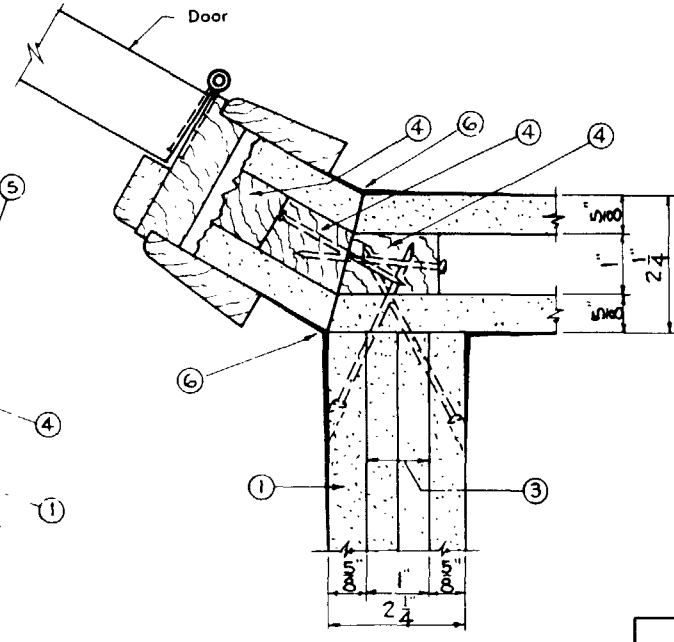

ANGULAR WALL JUNCTION DETAIL

① ⅝" *Firestop Bestwall Gypsum Board*
② Gypsum Ribs 6¼" Wide
③ Gypsum Ribs 3½" Wide
④ Wood Ribs
⑤ Corner Bead and Joint Finisher
⑥ Tape and Joint Cement — Fill Joint Between Boards Before Tapeing
⑦ Wood Shims
⑧ Fast Setting Mastic
⑨ 10d Finishing Nail
⑩ Joint Cement or Fast Setting Mastic
⑪ Wood Wedges (Cut from Shingles)

BESTWALL

HUMMER SYSTEM "B" MODIFIED
Wood and Steel Door Details
January, 1959 Sheet 4

SGP 0027233

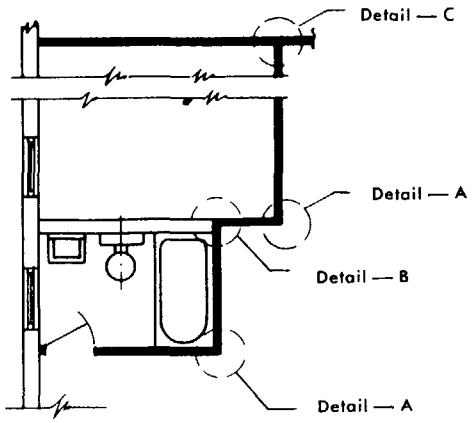

FLOOR PLAN

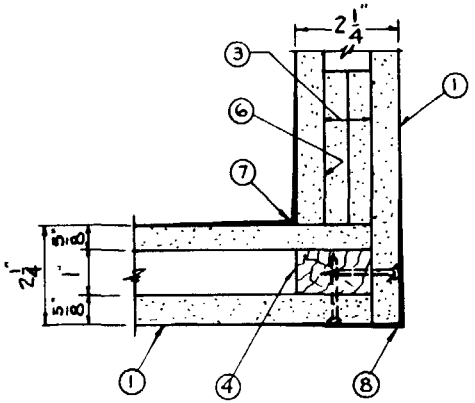

DETAIL — A

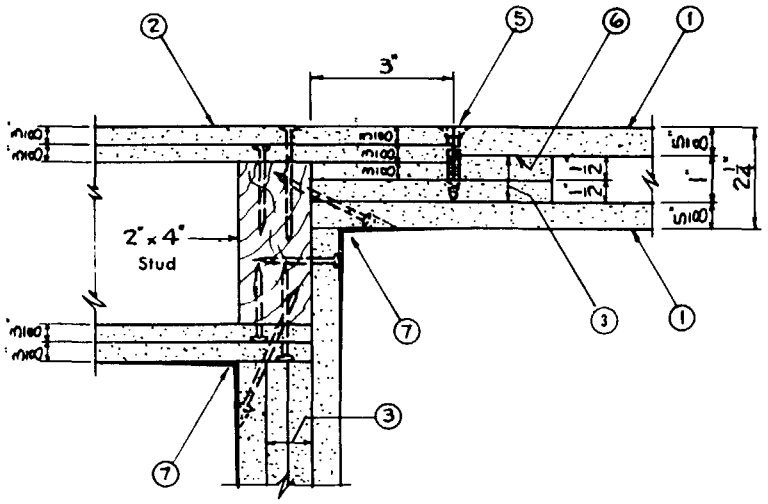

DETAIL — B

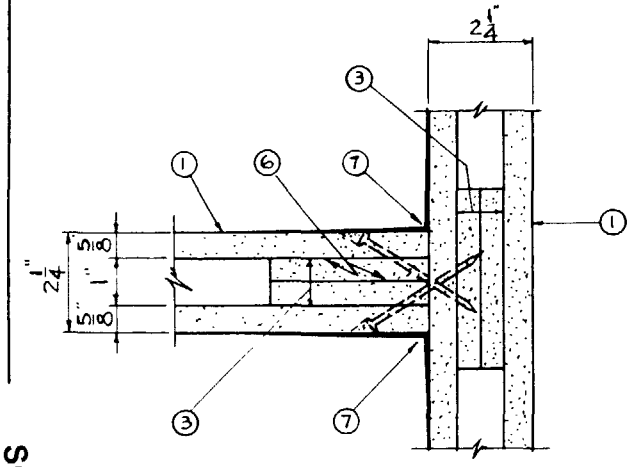

DETAIL — C

1. 5/8" Firestop Bestwall Gypsum Board
2. Bestwall — Hummer System "A" Modified
3. Gypsum Ribs 3½" or 6¼" Wide
4. Wood Rib 1" x 1⅝"
5. No. 14 Phillips Flat Head Screws, 1½" Long
6. Laminating Compound
7. Tape and Joint Cement
8. Corner Bead and Joint Finisher

BESTWALL

HUMMER SYSTEM "B" MODIFIED
Wall Intersections & Details
January, 1959 Sheet 5

8

SGP 0027234

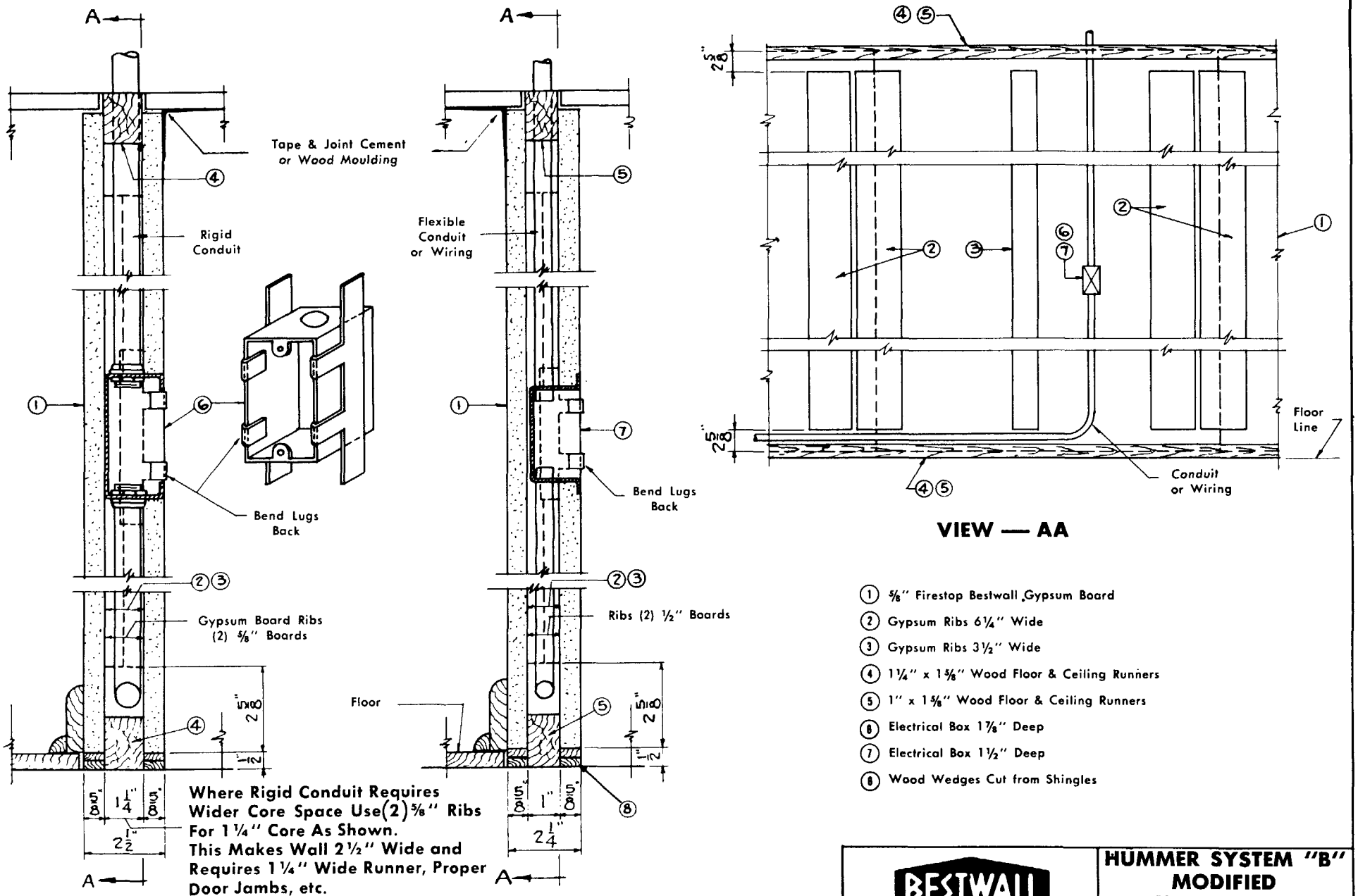

BESTWALL

HUMMER SYSTEM "B" MODIFIED

Electrical Wiring

January, 1959 Sheet 6

SGP 0027235

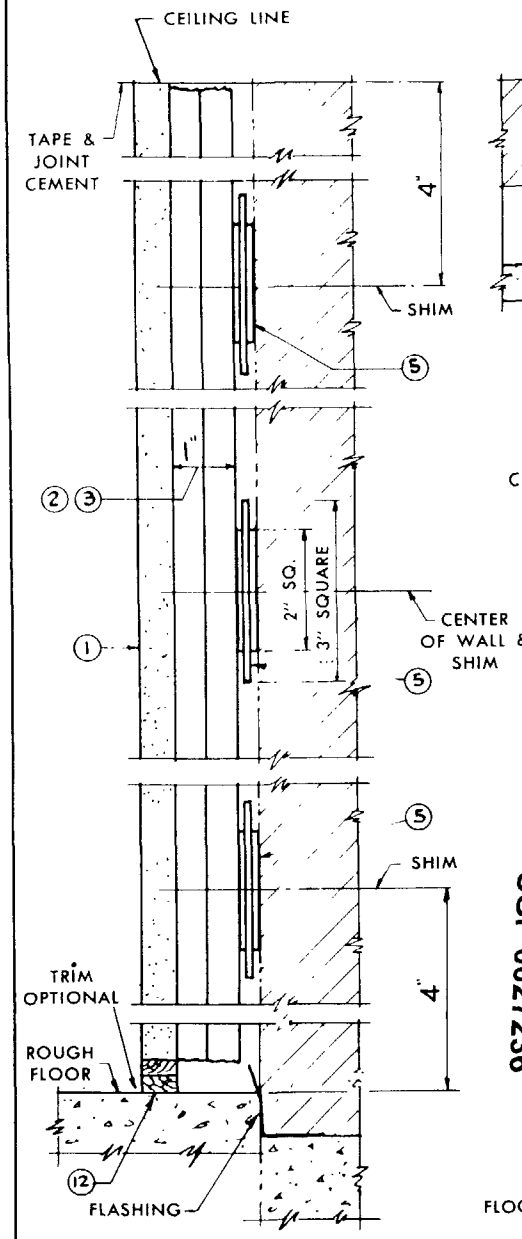

VERTICAL SECTION

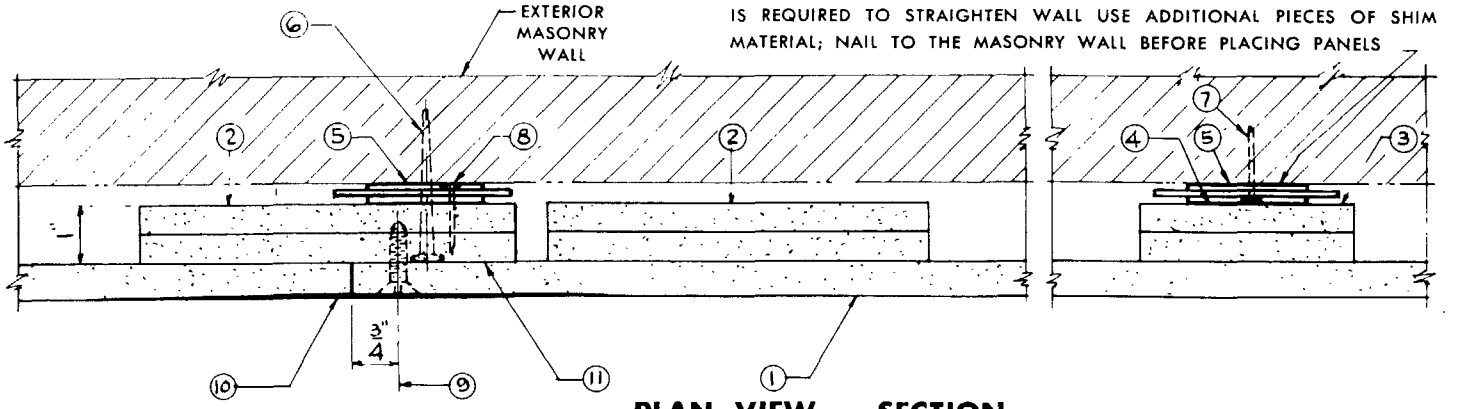

PLAN VIEW — SECTION

NOTE: NO DRIP SHIM IS APPROXIMATELY 3/8" THICK, IF GREATER THICKNESS IS REQUIRED TO STRAIGHTEN WALL USE ADDITIONAL PIECES OF SHIM MATERIAL; NAIL TO THE MASONRY WALL BEFORE PLACING PANELS

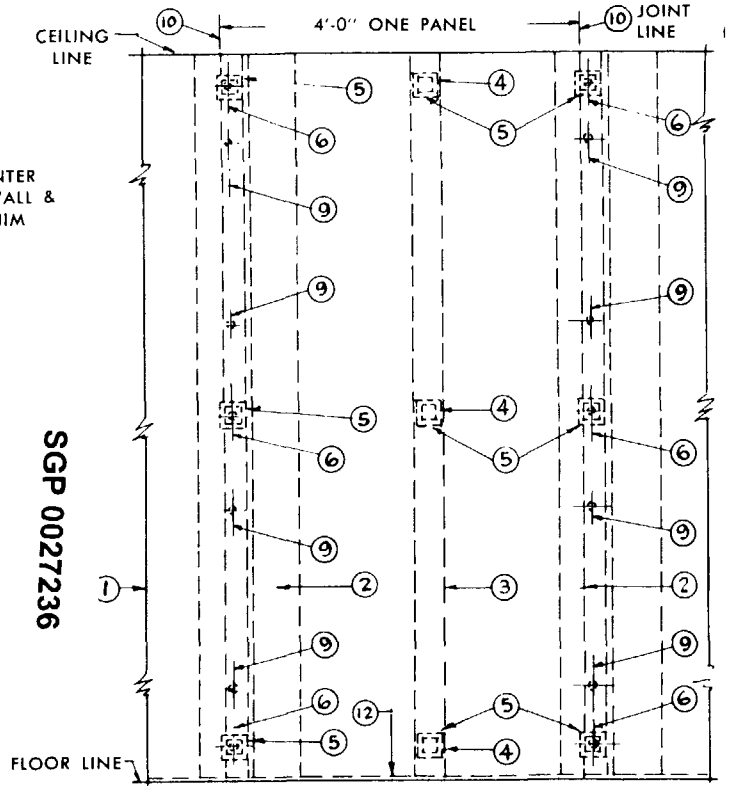

INTERIOR VIEW — ONE PANEL

SGP 0027236

(1) 1/2" or 5/8" Bestwall Gypsum Board

(2) Gypsum Rib 6 1/4" Wide

(3) Gypsum Rib 3 1/2" Wide

(4) Mastic Between Ribs and Shims — Center Rib (3) Only

(5) No Drip Shim Made from 210# Uniform Thick Asphalt Shingle or Like Material, Nail to Panel or Wall Before Erecting

(6) 8d Masonry Nail or Drive Rawl Through Rib and Shim Into Wall

(7) Masonry Nail

(8) Wall Board Nail

(9) No. 14 Phillips Flat Head Screws 1 1/2" Long, Locate Screws 12" from Ceiling and Floor Lines and 24" O.C. Between

(10) Tape and Finish Joint, Screws Under Tape

(11) Bestwall Laminating Compound

(12) Wood Wedges (Cut from Shingles) Remove Wedges If Space Is Grouted-In

NOTE: Design is for Exterior Walls — May Be Used for Interior Walls.

BESTWALL

HUMMER SYSTEM "B" MODIFIED

Self Furring Wall Details

January, 1959 Sheet 7

TOOLS FOR THE APPLICATION OF BESTWALL-HUMMER SYSTEM "B" MODIFIED:

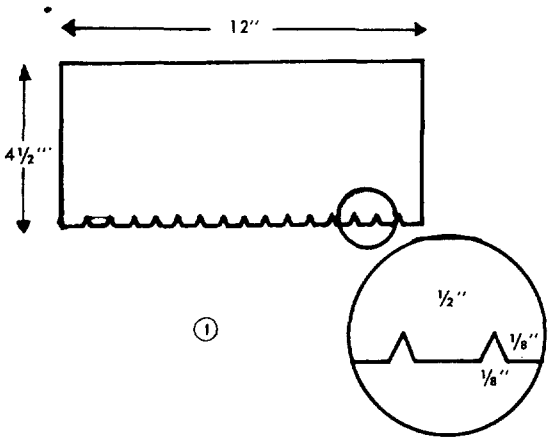

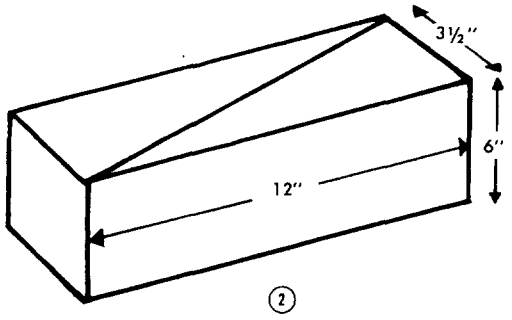

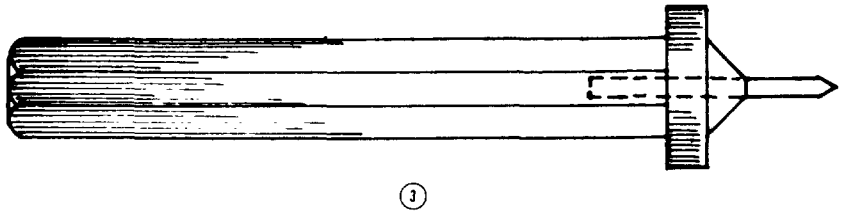

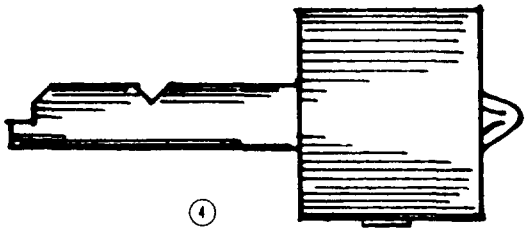

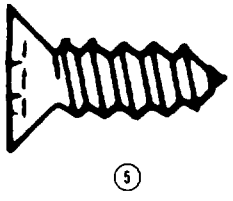

1. Bestwall Laminating Compound spreader.
2. Bestwall Laminating Compound spreader (Box type)
3. Countersink for screws.
4. Screwdriver with gauge for Phillips flat head screws. Items 1-2-3 & 4 available from Franklin & Penny, West Chester, Penna.
5. No. 14 Phillips flat head wood screws plus bit brace (for Phillips flat head screws) and ¼" Drill.

SGP 0027237

STABILITY

The Bestwall Hummer System "B" Modified in the official fire test at Underwriters' passed a standard hose stream test as described in ASTM E119 in developing a one hour rating. This is a severe impact test in itself proving the stability of the construction and the strength of the fasteners.

Four 8′ square panels of the Bestwall Hummer System "B" Modified were subjected to a 60 pound sand bag bump test as described in ASTM E72. There was no failure after 10 blows with a four foot drop of the 60# weight. When the panel was struck by the 60 pound weight swung through 90° (4′ drop), the immediate deflection at the center was 1.18 inches with a residual set of 0.05 inches. A 2″ x 4″ (16″ on C.) wood stud partition faced with ½″ gypsum wallboard on each side in a similar test at the same time deflected 1.30 inches.

The 2 hour and 3 hour fire resistive construction with independent faces have practically no deflection or set under 10 blows of the 60 pound weight dropped 4′.

SOUND

Sound tests at Riverbank Laboratories have developed a sound transmission loss of 30 decibels with Bestwall Hummer System "B" Modified and 40 decibels with 3 hour version including ½″ Fiberglas mat in between 2 faces. (Tests made in 1957 after Riverbanks radically changed method of test).

VALUE

The method of construction including lamination, Phillips head screws, all fasteners under tape, and a tight shear coat eliminates joint beading, delayed shrinkage and nail pops.

SPACE SAVING

The Bestwall Hummer System "B" Modified being 2¼″ wide takes only ½ the space a 2″ x 4″ stud wall finished on both sides with ½″ gypsum board. With 100′ of interior partition in a house, this would add 20 sq. ft. of usable floor space.

FIRE RESISTANCE

1 hr. — 2 hr. — 3 hr. Non-load Bearing Partitions (see details)

SGP 0027238

FIREPROOF GYPSUM

BESTWALL

BUILDING PRODUCTS

GYPSUM LATH AND PLASTER
LIME
FIRESTOP BESTWALL® GYPSUM WALLBOARD
GYPSUM WALLBOARD
GYPSUM SHEATHING
GYPSUM ROOF DECKS
JOINT SYSTEM
BEDDING COMPOUND
TOPPING COMPOUND
LAMINATING COMPOUND
CERTEX TEXTURE
JOINT TAPE
SPACKLING COMPOUND
PATCHING PLASTER

BESTWALL GYPSUM COMPANY

ARDMORE, PA.

Plants and District Offices in Principal Cities Throughout the United States

Form No. BW-59323 Jan. 59-10M-L

SGP 0027239

Printed in U.S.A.

BESTWALL

HUMMER SYSTEM

"C"

NON LOAD BEARING INTERIOR PARTITIONS

LOW COST GYPSUM WALLBOARD ASSEMBLY

NO JOINT TREATMENT

NO EXPOSED FASTENERS

MOVABLE OR PERMANENT

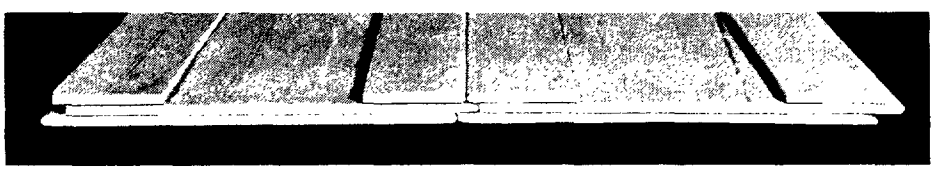

See your nearest Bestwall Gypsum Dealer.

Ask your Bestwall Certain-teed Salesman.

FIREPROOF GYPSUM BESTWALL BUILDING PRODUCTS

MANUFACTURED BY BESTWALL GYPSUM COMPANY

Sold through: Bestwall Certain-teed Sales Corporation
120 East Lancaster Avenue, Ardmore, Pa.

SGP 0027246

MATERIALS REQUIRED:

1. 16″ wide, rounded edge Bestwall Hummer "C" Panel, 8′ long
   or 24″ wide, beveled edge Bestwall Hummer "C" Panel, 8′ long.
2. ¾″ x 1⅝″ wood runner. (See note on rigid conduit in Electrical Section)
3. Nails, rawl drives, screws, etc., as shown.
4. 1½″ Phillips flat head #14 wood screw (as manufactured by American Screw Company, Chicago, or equal).
5. Bestwall Laminating Compound, non-setting mastic, and quick setting mastic.
6. Metal and wood door frames, wood runners, cap and trim as per architectural details (similar to those shown in details in Bestwall Hummer System "C" Booklet).
7. Metal corner and casing sections as per details indicated in plans and specifications (similar to those indicated in the Bestwall Hummer System "C" Booklet).

APPLICATION:

GENERAL NOTES

The plans for the building should be studied and a layout of the 16″ (or 24″) wide "C" panels made to determine corner and wall intersections, door openings, location of conduits within wall, necessary temporary bracing, and the order of installation. With experience and care the work can be expedited and the loss due to cut pieces necessary to make intersections shown by the architectural plans reduced to a minimum.

The actual layout of the partitions, installation of floor and ceiling runners, setting of door frames, hanging doors, trimming (including openings, floor and ceiling) mentioned in the following specifications and shown on the detail sheets are generally included in new construction, in the carpentry sub-contract. Decoration mentioned in the concluding section is generally included in the painting sub-contract. Any contract based on the following specifications should clearly stipulate the responsibility of the wallboard or partition contract.

A contract for partitions only in an existing building may cover all the work in one agreement.

CEILINGS

Ceiling installations are not covered under the Bestwall Hummer System "C" instructions since these are for partitions only. Where ceilings are to be installed, it is suggested that to correspond with the economies possible with the Bestwall Hummer "C" System a Bestwall Hummer "Strip Lamination" gypsum wallboard installation be made. Where acoustical treatment or other installation is desired, the owner and architect should make the specifications for the particular installation required.

OLD WORK

The "C" System partitions may be used in an existing building regardless of the type walls, whether they are plastered, wallboard, or masonry and regardless of the ceilings, whether they are plastered, wallboard concrete or acoustical treatment. Suggested details following this specification show how to treat different conditions.

INTERIOR PARTITIONS:

Lay out the partitions on the floor and install floor runner. Where there is a wood sub-floor, the runner may be nailed in place with a 10D nail. If there is a concrete floor, the wood runner should be predrilled and concrete nails used or screws with plugs or shields set in the floor. The fasteners should be every two feet.

Where the partition extends to the ceiling and is to be fastened, the top runner shall be plumbed up over the floor runner and fastened in place.

Where metal door frames are used they shall be set in place and braced. Other type doors shall be located and all openings noted.

Begin erection at starting point, whether it is an outer wall, a column or a corridor intersection as determined from an over-all study of the floor plans.

MOVABLE INSTALLATION

Use the metal trim to close the edge against the wall and set the first panel in place using a 4D flat head nail in the floor and ceiling runner. Where there are no conduits to be installed in the wall section, the opposite face may be put in following closely with the first face. Please notice the method of staggering the joints in the board, which is necessary to develop the tongue and groove feature of the material. As each panel of the opposite face is set in place, run ribbons of non-setting mastic down the strips of $\frac{3}{8}$" board on the back of the panel, set them in place and then countersink (using Tool A) and predrill for the Phillips Head Screws to be used in the tongue of the last panel set. These screws should be placed 2' from the floor and the ceiling and then approximately 2' on center through the rest of the length from floor to ceiling. In driving the Phillips head screws home, the panels on opposite sides shall be held firmly in place so that the screw can be drawn up tight without stripping. The panels will have to be cut lengthwise as the wall ties into the other side of the building or into the intersecting wall or column. These cut edges shall be covered with a metal trim as per the details.

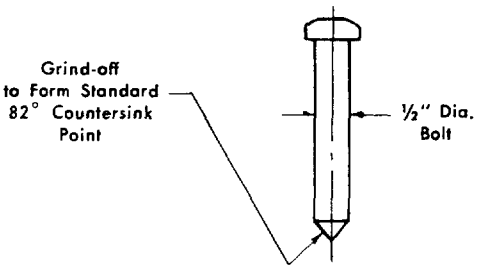

Openings shall be cut in the panel for doors, windows, borrowed light or other access openings as the panel is erected. It is important to remember that the proper layout can speed the job and reduce cutting, but care should be taken to avoid discontinuity of the standard panel width in the long exposed wall, regardless of the number of openings or the wall intersections from the opposite side. Each panel set in place shall be meshed with the panel already erected so that there is a tight joint between the two sheets and each sheet is vertical. Do not hammer on localized points or areas, but use protection and a long strip in order to mesh the panels.

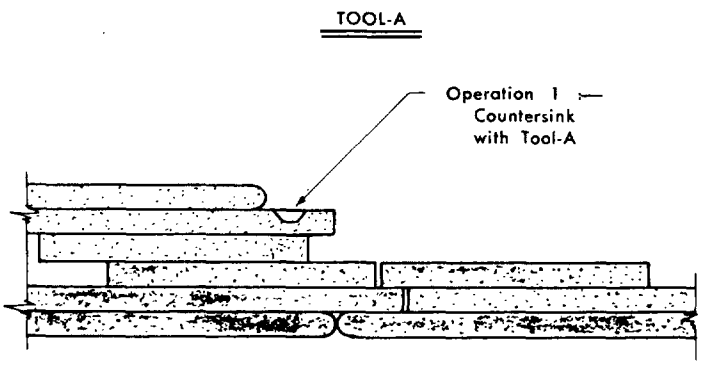

After the panels are erected, the doors and jambs (hang door and trim one side on bench) shall be set in the openings and trimmed and the base and ceiling molding nailed in place. Where an opening has been cut in the wall section such that there is a hollow space (no strips in core area) at the opening, cut pieces from erected panels shall be fitted, glued on the sides and inserted around the opening in order to have a solid core at least 3" back from the edge of every opening to give substance and backing for the installation of the casing and trim.

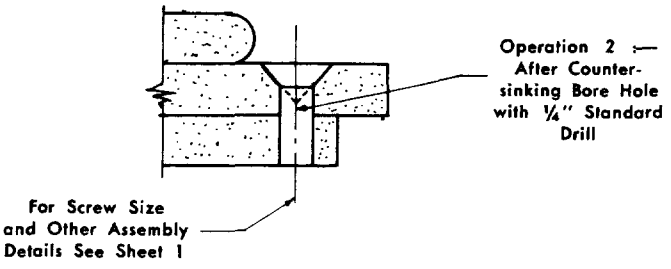

ELECTRIC WIRING

All electrical work shall be under the electrical sub-contract. Flexible conduit or cable can be installed in the erected wall from the floor or ceiling. Rigid conduit shall be installed after one side of wall is in place and can be run in the core space vertically and along top or bottom of the panels. Where rigid conduit is used having an outside diameter greater than ¾", an 8" wide strip of ¼" gypsum wallboard shall be installed down the strip in back of the panels in place to provide a 1" core space (2½" total width wall). See detailed plans. The opposite side of the wall is erected after the conduit is in place and inspected. If desired, the back board of the panel may be gouged out to provide extra space for conduit without changing over-all thickness of wall. Avoid cutting or marring face layer.

Note: Care should be exercised and 2½" wide door jambs provided in all walls where rigid conduit is required. This means a 1" x 1⅝" floor and ceiling runner and/or proper provision in every other item dependent on the width of the wall.

EXTERIOR WALLS

Where desired, the "C" Panel may be used to finish an exterior wall to match panelled appearance of interiors.

Where the exterior wall (or an existing interior wall) has a smooth true surface, the panels may be applied with a mastic strip in back of each rib and three screws used in the tongue (top, bottom and middle). The screws shall be long enough to pierce a material providing holding power. This can be determined by test.

Where the wall is rough masonry (or other imperfect surface) install a top and bottom runner first and then a horizontal furring strip about midway between the two. Attach "C" Panels with flat head nails or screws through tongue at the three supports using a cushion of mastic beneath the ribs over the supports.

In a new building with framed exterior walls, the "C" Panel may be nailed at top and bottom and at mid height (to a stud or a horizontal block between studs). Insulation and a vapor barrier should be in the wall. A strip of mastic should be run down the groove of the "C" Panel just before it is meshed into the tongue of the "C" Panel in place to seal the joint and reduce air filtering at the joint.

In all cases, trim shall be installed as with interior partitions (see plan sheets for details).

PERMANENT INSTALLATION

One change in the specification for the movable installation is necessary to make it permanent. In place of a non-setting mastic, use Bestwall Laminating Compound on the back of the ribs in installation.

All other details and specifications are as per plans, sheets 1 to 4 and the specifications for movable partitions.

DECORATION:

As there is no Joint System in the wall area, a one coat paint job may be made for a flat, semi-gloss or gloss finish. Wood trim should have all nail holes puttied and be primed before final coat of paint.

For best results entire wall including trim should be primed and then painted.

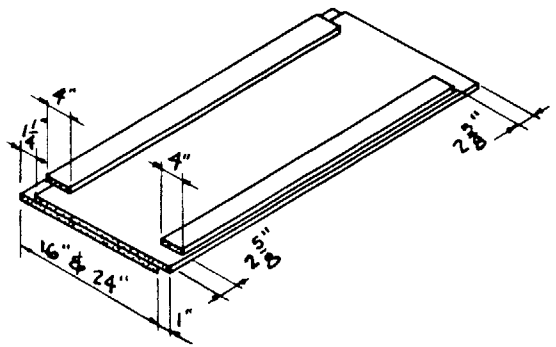

ISOMETRIC VIEW
(Face Side Down)

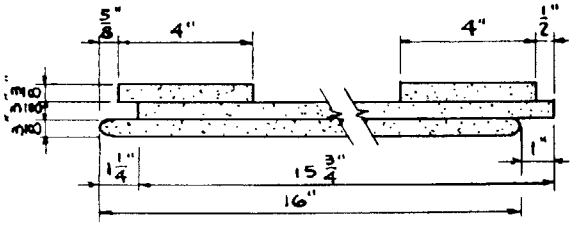

SECTION
(Round Edges in Face)

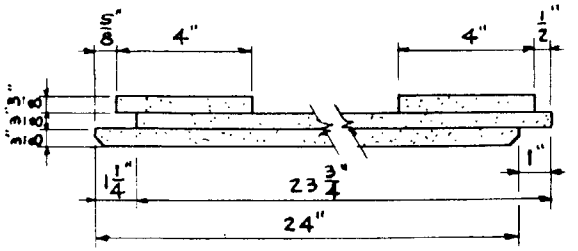

SECTION
(Beveled Edges in Face)

"C" PANEL

SGP 0027250

WALL & CORNER SECTIONS

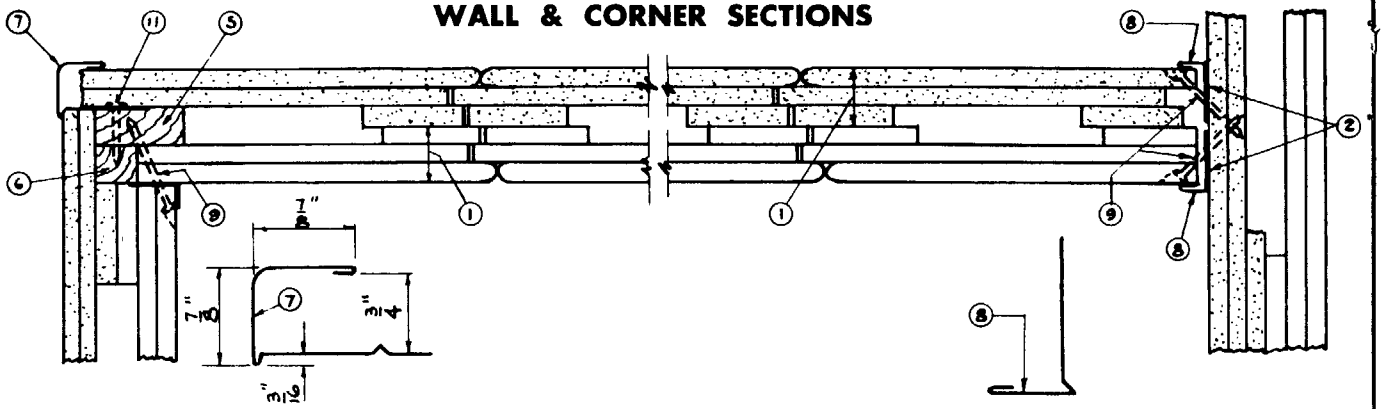

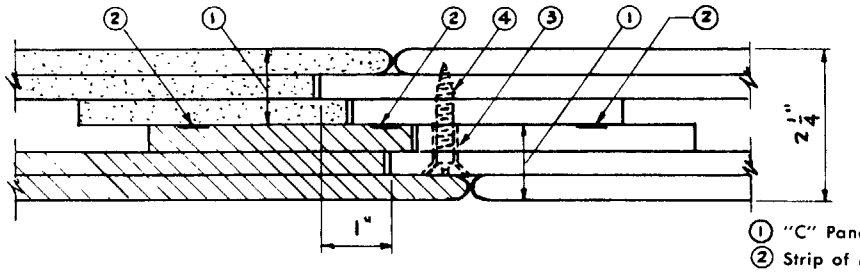

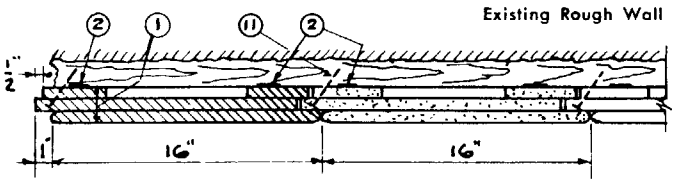

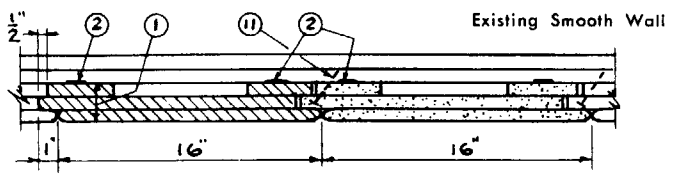

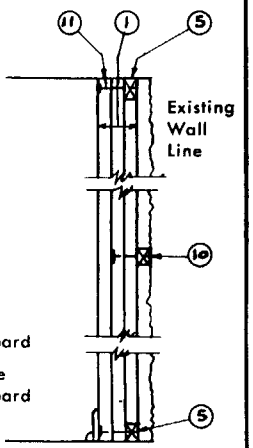

① "C" Panel
② Strip of Mastic
③ ¼" Hole for Screw
④ 1½" #14 Phillips Head Wood Screw
⑤ ¾" x 1⅝" Wood Strip
⑥ ¾" x ¾" Wood Strip
⑦ Bestwall #105 Rd. Nose Metal Casing for ¾" Board
⑧ Bestwall #102 Angle Edge Metal Casing for ½" Board
⑨ 8-d Finishing Nail Driven at Angle & Down
⑩ Horizontal Wood Furring at Mid Height
⑪ 15-d Flat Head Nail or 1½" Screw

SECTIONS
Showing "C" Panel Used Over Existing or Masonry Walls

BESTWALL®

HUMMER SYSTEM "C"
General Details
June, 1958 Sheet 1

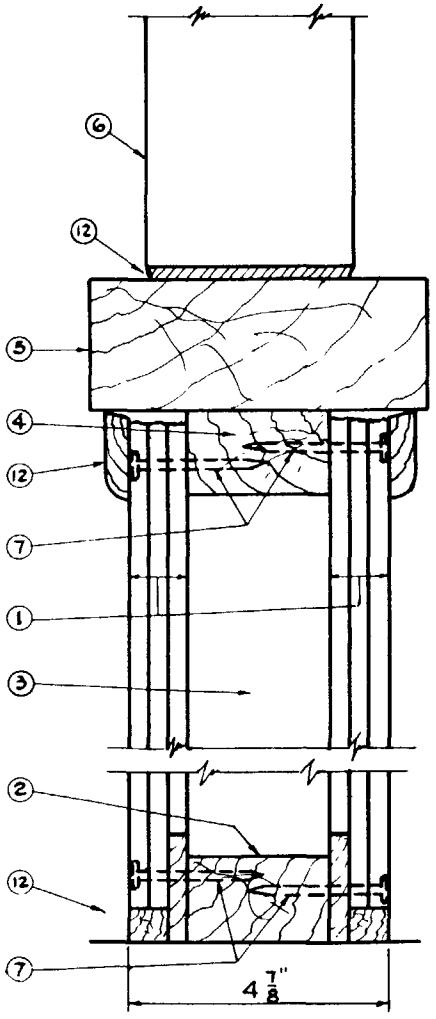

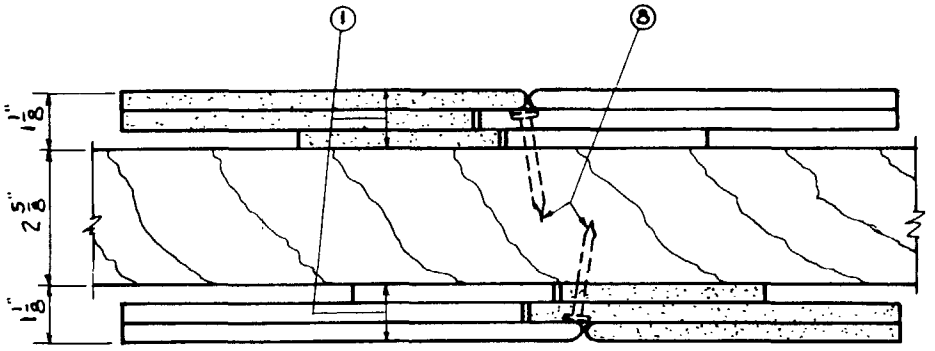

1. "C" Panel
2. Bottom Plate
3. Wood Framing
4. Top Plate

(2) (3) (4) 1⅝" x Wood

5. Wood Cap
6. Glass Block (or Borrowed Light Panel)
7. 4-d Flat Head Nail or 1½" Wood Screw Through Face Under Trim
8. 4-d Flat Head Nail or 1½" Wood Screw Concealed in Tongue NOT Under Trim
9. 1½" Deep (Shallow) Electric Outlet Box
10. Outlet Box Metal Fastener
11. Conduit or Cable
12. Trim as Desired

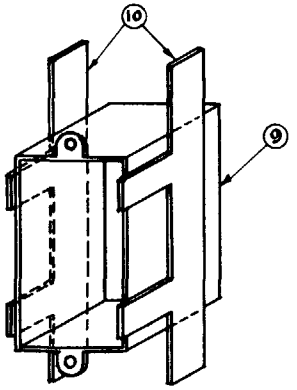

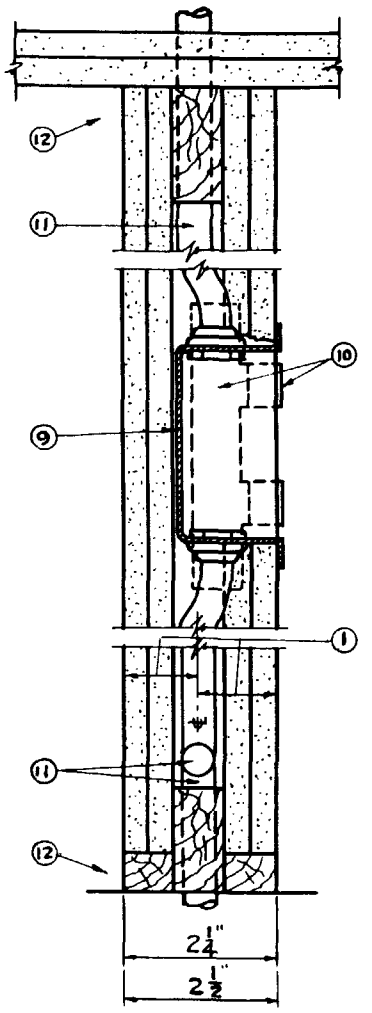

Note: See Sheet 2 for Details at Top and Bottom Connections of "C" Panel Installations.

"C" PANEL

Used Over Wood Framing

Showing Glass Block Above

DETAILS

Electric Outlet or Switch Box and Conduit Installation

BESTWALL®

HUMMER SYSTEM "C"
Misc. General Details

June, 1958 Sheet 4

SGP 0027251

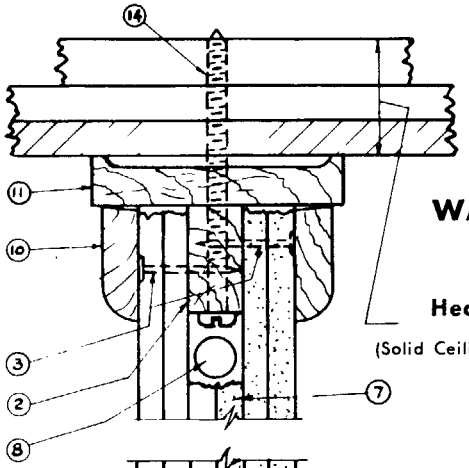

WALL ATTACHED TO CEILING

Head Details

(Solid Ceiling Construction)

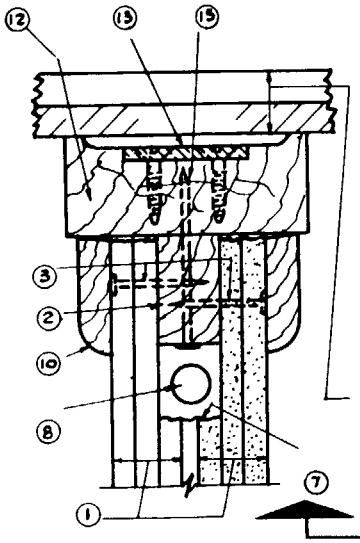

FREE STANDING WALL CEILING HIGH

Head Details

Against Light Ceiling Construction as Suspended Acoustical Tile or Suspended Metal Pan

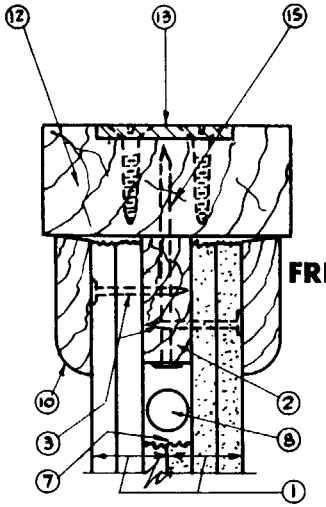

FREE STANDING WALL

Head Details

Where Conduit with O.D. greater than ¾" is Specified add an 8" Wide Strip of ¼" Gypsum Wallboard Between Ribs of panels to provide a Core Space of 1" and an Overall Width of 2½"; or gouge out back layer only and keep Standard ¾" Core Space.

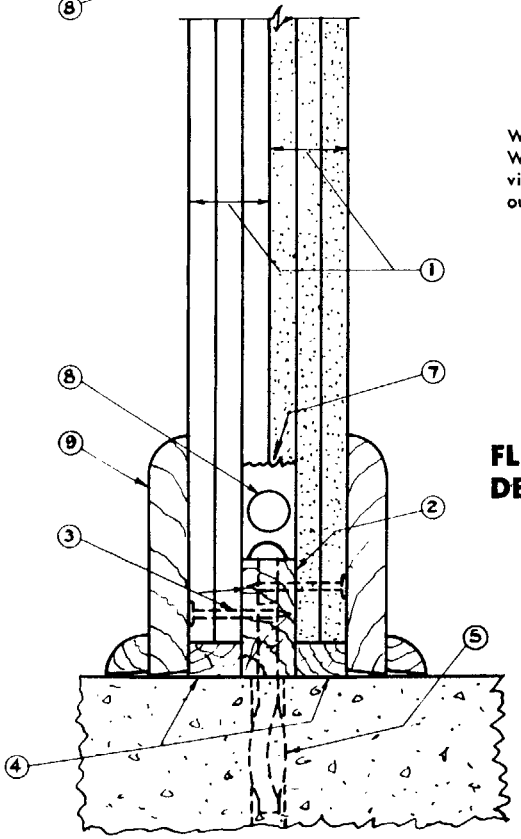

FLOOR DETAIL

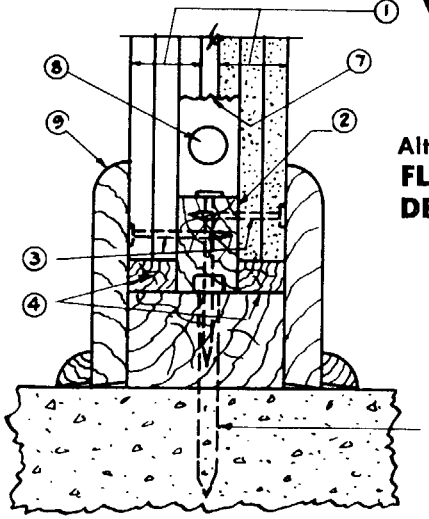

Alternate FLOOR DETAIL

1. "C" Panel
2. ¾" x 1⅝" Wood Strip
3. 4-d Flat Head Nail
4. Wood Wedge to Hold Panel in Place
5. Rawl Drive or Bolt & Shield
6. Concrete Stud, Screw, or Nail
7. Rib Held Back 2⅝" from End of "C" Panel to Provide for (8)
8. Conduit or Cable
9. Wood Base and Molding
10. Wood Molding

Note: Type and Detail of Trim Optional

11. ¾" x 3⅝" Wood Cap
12. 1⅝" x 3⅝" Wood Cap (For Free Standing Wall)
13. ⅛" x 2" Strap Iron Reinforcing Attached by Wood Screws
14. Long Screw or Nail to Solid Backing
15. 8-d Flat Head Nail

TYPICAL SECTIONS

SGP 0027252

BESTWALL®

HUMMER SYSTEM "C"
Floor & Ceiling Details

June, 1958 Sheet 2

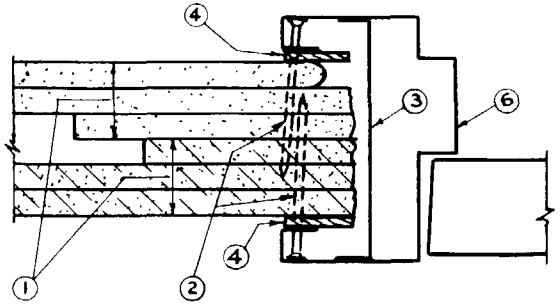

SECTION
(Jamb and Head)

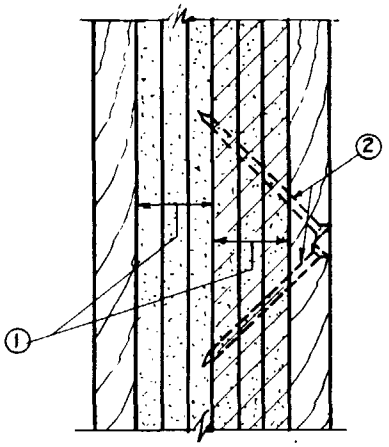

Nailing Wood Trim to "C" Panel

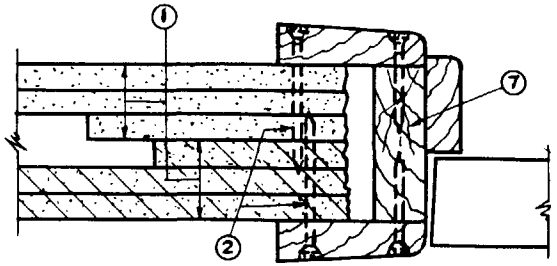

Section
Jamb and Head

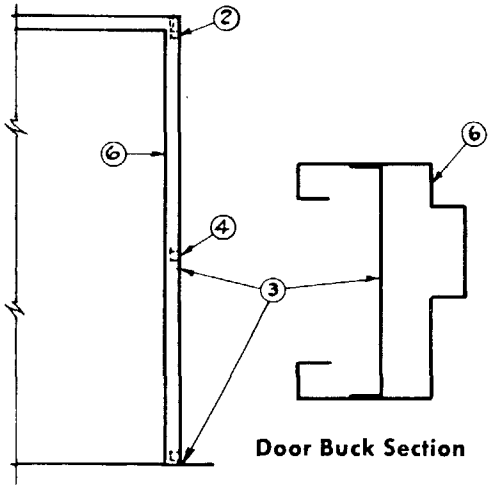

Door Buck

Door Buck Section

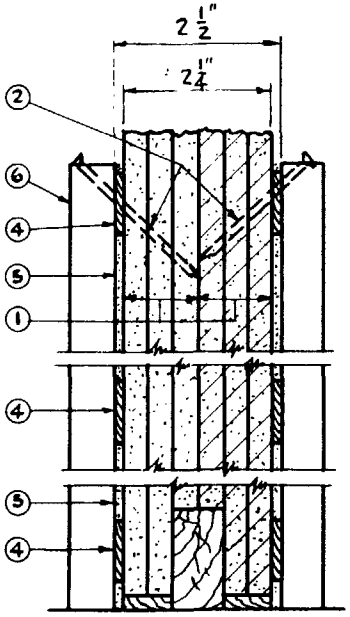

1. "C" Panel
2. 8-d Finishing Nail (All Nails Driven Down and at Angle)
3. Spreader Clip
4. Wood Shim Set with Fast Setting Mastic
5. Mastic (or Bestwall Joint Cement)
6. Metal Door Buck
7. Wood Door Jamb (Showing Trim Flush with Jamb)
8. Wood Door Jamb (Showing Trim Let In Jamb)
9. 2¼" x 1⅝" Wood Strip (Beveled at Two Corners as Shown)
10. 12-d Nail
11. Bestwall Laminating Compound

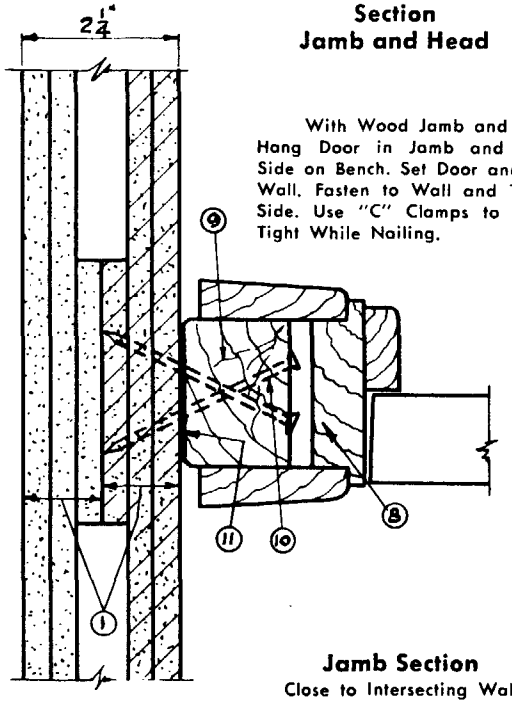

With Wood Jamb and Trim. • Hang Door in Jamb and Trim One Side on Bench. Set Door and Frame in Wall. Fasten to Wall and Trim Other Side. Use "C" Clamps to Draw Trim Tight While Nailing.

Jamb Section
Close to Intersecting Wall
(Where Door is Away from Intersecting Wall Use Same Detail as for Jamb and Head Above.)

WOOD JAMB AND TRIM
No Door Buck Required

METAL DOOR BUCK AND TRIM

SGP 0027253

BESTWALL®

HUMMER SYSTEM "C"
Door Details

June, 1958 Sheet 3

BESTWALL HUMMER SYSTEM "C"

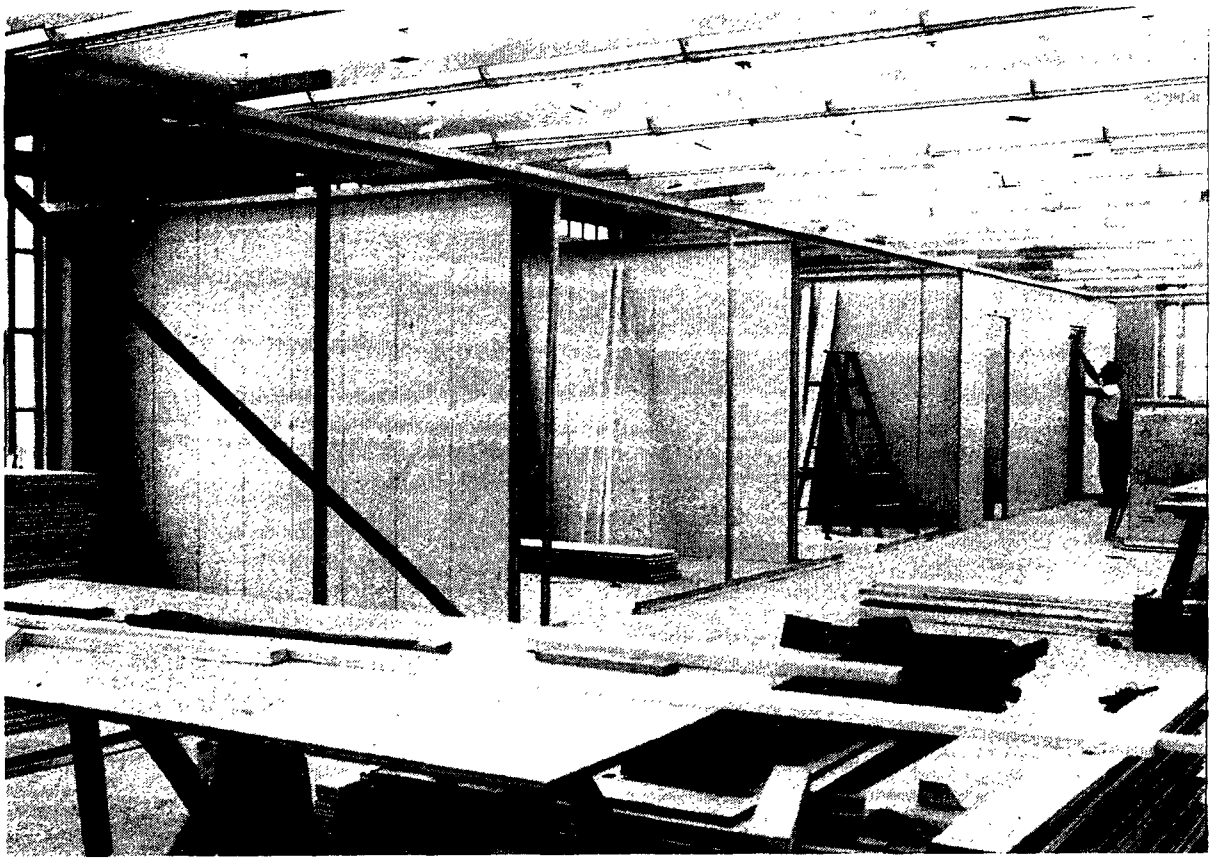

Bestwall Hummer System "C" partition application in an office building.



SGP 0027254

Completed job showing Bestwall Hummer System "C" partition.

FIREPROOF GYPSUM

BESTWALL

BUILDING PRODUCTS

FIRESTOP BESTWALL® GYPSUM WALLBOARD
GYPSUM WALLBOARD
GYPSUM SHEATHING
GYPSUM ROOF DECKS
JOINT SYSTEM
BEDDING COMPOUND
TOPPING COMPOUND
CERTEX TEXTURE
JOINT TAPE
SPACKLING COMPOUND
PATCHING PLASTER

For further information and details:

BESTWALL CERTAIN-TEED SALES CORPORATION
120 East Lancaster Ave.
Ardmore, Pennsylvania

DISTRICT OFFICES

ATLANTA 3, GEORGIA
1412 Rhodes Haverty Building
134 Peachtree Street

BUFFALO 26, NEW YORK
P.O. Box 2608
Amherst Branch

CHICAGO 4, ILLINOIS
208 So. LaSalle Street

CLEVELAND 14, OHIO
815 Superior Avenue

DALLAS 22, TEXAS
P. O. Box 6030

DES MOINES 9, IOWA
505 Fifth Avenue

DETROIT 4, MICHIGAN
305 Woodbrook Bldg.
5050 Joy Road

EAST ST. LOUIS, ILLINOIS
17th Street & Broadway

JACKSON 6, MISSISSIPPI
P. O. Box 4625
Fondren Station

KANSAS CITY 26, MISSOURI
1248 Crystal Street

MINNEAPOLIS 2, MINNESOTA
509 Second Avenue, South

RICHMOND 4, CALIFORNIA
1014 Chesley Avenue

SALT LAKE CITY 1, UTAH
119 West 2nd, South

SUMMIT, NEW JERSEY
119 Summit Avenue

TACOMA 2, WASHINGTON
1718 Thorne Road

WILMINGTON 3, DELAWARE
2011 Concord Pike

EXPORT OFFICE: 100 East 42nd Street, New York 17, New York

Form No. BW 58322 8-58 10ML Printed in U.S.A.

SGP 0027255

route slip

GP02

LOCATION: Tigard Lab

ATTN: C. W. Johnert

This is the Hummer info you wanted

- ☐ PLEASE HANDLE TO CONCLUSION
- ☐ READ AND GIVE ME YOUR COMMENTS
- ☐ PLEASE READ AND RETURN
- ☐ FOR YOUR FILES
- ☐ FOR YOUR APPROVAL
- ☐ PER YOUR REQUEST

FROM: Ted

DATE: 2/3

LOCATION:

P1



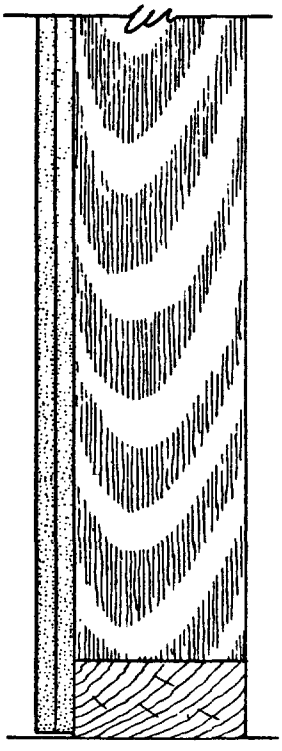

HUMMER SYSTEMS

TWO-PLY GYPSUM LAMINATION

The original laminated gypsum wallboard construction for applying gypsum wallboard to conventional framing.

SGP 0027257

TWO-PLY GYPSUM LAMINATION

Two-Ply Lamination is an advanced system of wall and ceiling construction erected by laminating two plies of ⅜" Bestwall Glass Fiber Reinforced Gypsum Wallboard to conventional framing. The first ply is nailed. The second is applied with adhesive and nails. It is the basic system for fire rated, durable walls and ceilings for residential and commercial work in new construction or remodeling.

- FIRE RESISTANCE—One-Hour
- SOUND TRANSMISSION—38-43 db.
- STRENGTH—Two-ply lamination offers twice the strength of one-ply application.
- LAMINATED CONSTRUCTION—Smooth surfaces—monolithic finish.

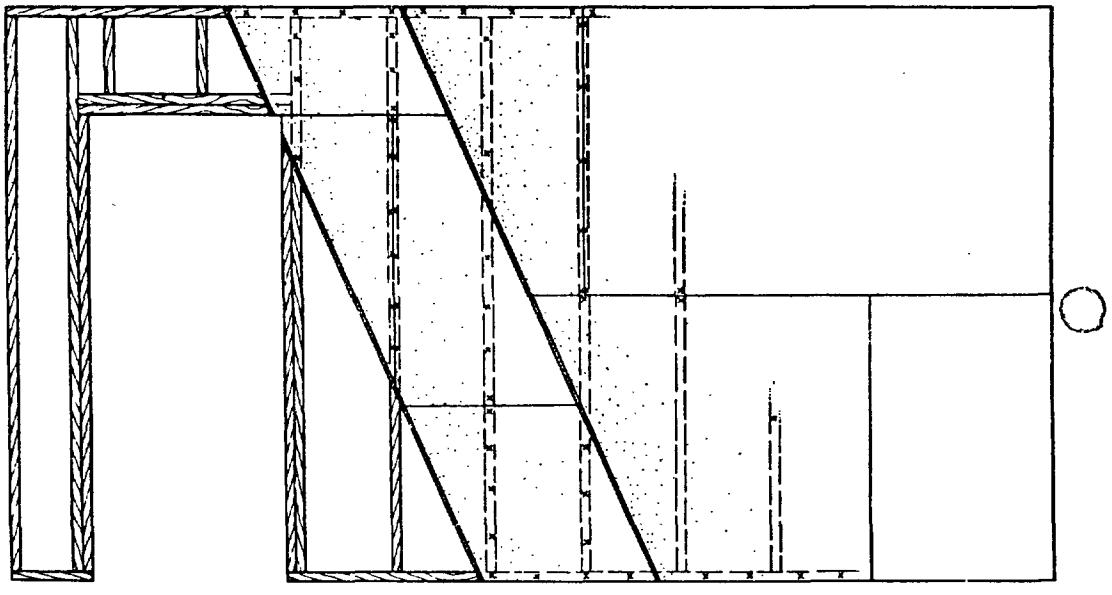

WALL ELEVATION SCALE ⅜" = 1'0"

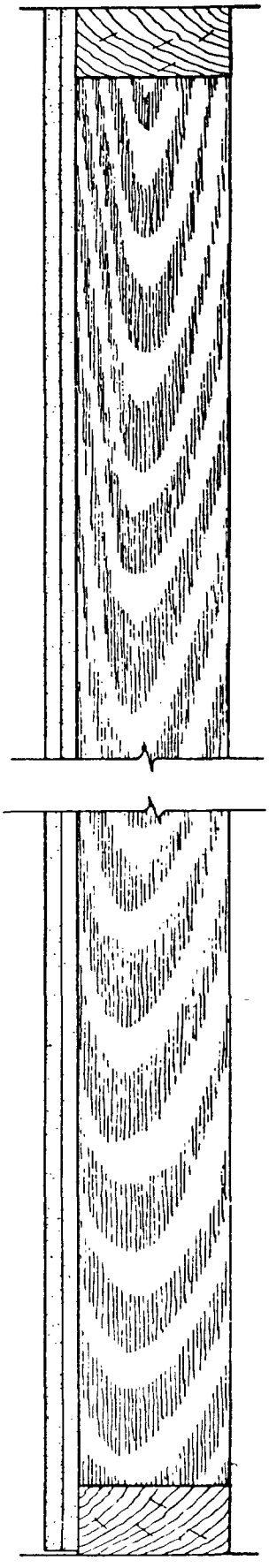

WALL SECTION

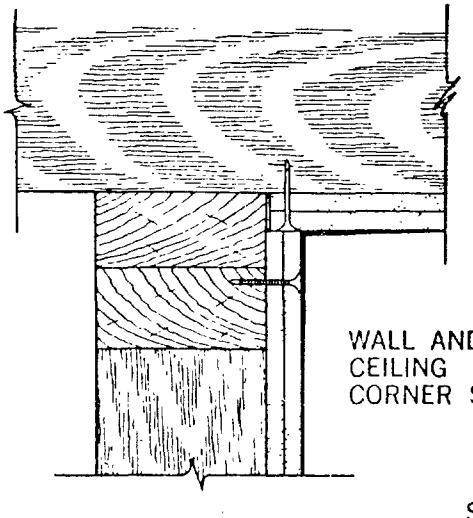

WALL AND CEILING CORNER SECTION

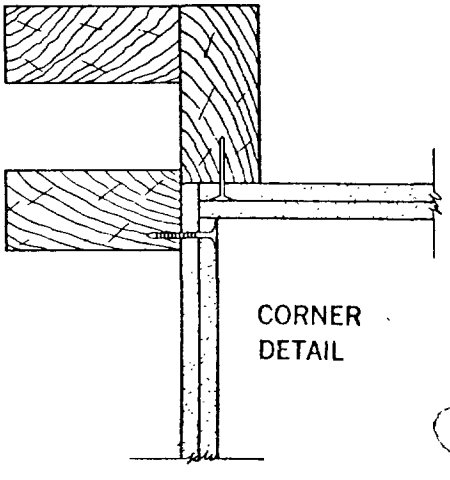

CORNER DETAIL

SCALE 3" = 1'0"

SGP 0027258

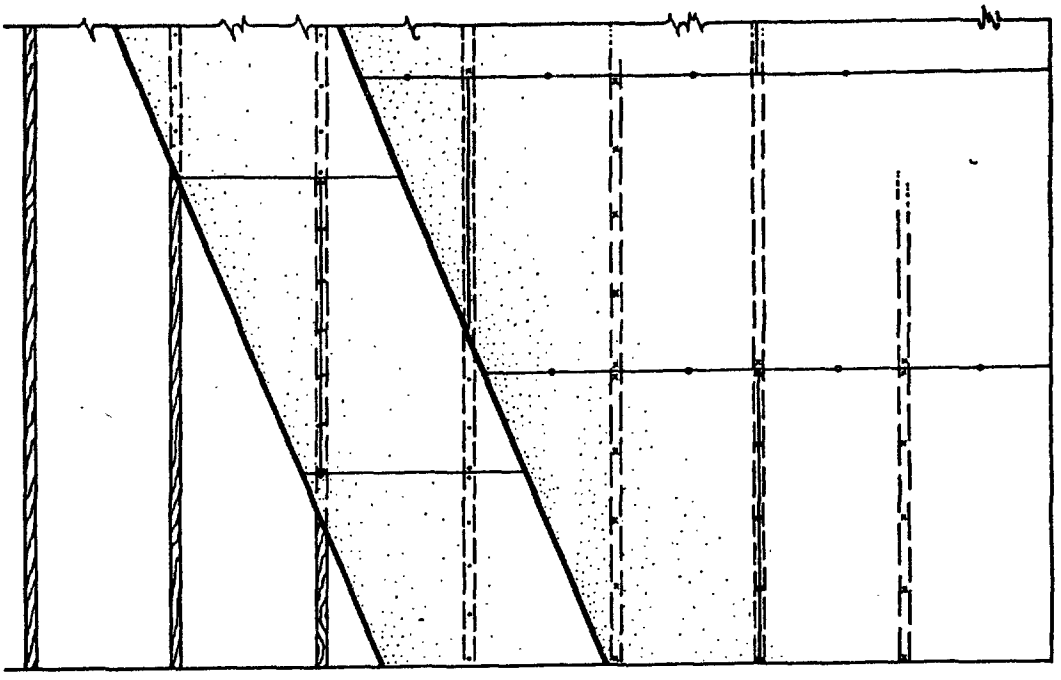

TWO-PLY CEILING—Joist spacing 24" o.c.

NOTE: Screws may be eliminated if joist spacing is 16" o.c.

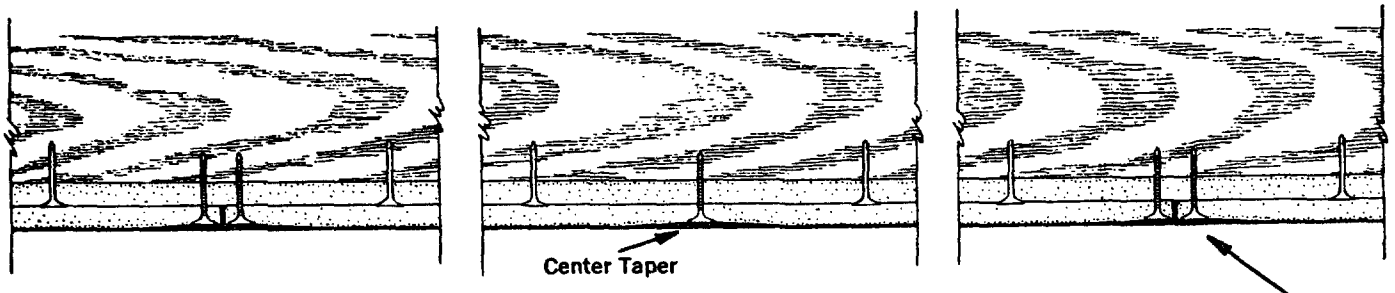

CEILING CROSS SECTION PARALLEL TO JOISTS

Permanent Fasteners in Recess Covered by Tape and Cement

SCALE 3"=1'0"

SGP 0027259

SYSTEMS ENGINEERING

Bestwall research and engineering combine Bestwall Glass Fiber Reinforced Gypsum Wallboard with the most comprehensive and advanced techniques in gypsum drywall construction. These include single [illegible] plies, metal studs, [illegible] application and [illegible] partitions [illegible] metal [illegible] system [illegible] space to your [illegible] with substantial savings on material and labor.

A staff of Bestwall Systems Engineers is available from coast-to-coast to assist you in quantity survey, detailing and installation of drywall systems to help you meet your requirements.

For detailed data, check your Sweet's File or write directly to the Bestwall Gypsum Company.

BESTWALL HUMMER SYSTEMS

TWO-LAYER LAMINATION

FEATURES:

1. Fire Resistance: . . . . . One hour.
2. Sound Transmission Loss: . 43 Decibels (Tested before 1957).
   38 Decibels (Tested 1958).
3. Strength: . . . . . Two-layer lamination has twice the strength of a single layer application.
4. Laminated Construction: . . Smooth monolithic walls created by unitized lamination of multi-plies of Gypsum Wallboard.

SPECIFICATIONS:

All gypsum wallboard and joint system materials used, including laminating compound, shall be manufactured by the Bestwall Gypsum Company and shall be installed by a Bestwall Hummer licensed contractor in a first-class workmanship manner.

FIRST (or back) LAYER (apply to ceiling first and then to sidewalls).

Backer Board: Use 3/8" thick, 4' or 2' wide, square edge gypsum backer, applied at right angles to the framing.

Nailing: Use 1¼" Drywall nails (or 1" long, divergent point staples). Ceiling spacing 5" to 7" o.c. Walls 6" to 8" o.c. Over metal framing use Bestwall Drywall screws or attachments recommended by metal framing manufacturing specifications.

DO NOT DIMPLE BOARD.

SECOND (or face) LAYER (apply to ceilings first and then to sidewalls).

Face Board: Use 3/8" thick, 4' wide, 8' to 16' long, tapered edge Gypsum Wallboard (use wallboard with center taper on ceilings) applied at right angles to the framing. Joints in face board must not occur over joints in the first layer board (spaced 12" min.). Do not dimple board for nails or screws that are under tape or trim.

Laminating Compound: See Bestwall Product Sheet BW-62355. Apply glue to back of face layer with serrated metal blade or to face of back layer with machine glue spreader.

Note: For applying face layer which has a vapor barrier predecorated finish, use a "contact type" adhesive.

Face Nailing: Use 1⅝" long Drywall nails.

Ceilings: Nail in edges and center taper at every nailing member.

Sidewalls: Nail in edges only at every stud.

Additional Fasteners: Use Bestwall Drywall screws in joints midway between joists or studs, if spaced more than 16" o.c. (as 24" o.c.).

For sidewalls only, use a double-headed nail in the center of the sheet at every other stud to hold face board tight to back layer until glue hardens.

Joint Treatment and Decorating: See Bestwall Product Sheet BW-62360.

SALES OFFICES

ATLANTA
801 Peachtree 23rd Building
1720 Peachtree Street, N. W.
Atlanta, Georgia 30309
Phone: 404 873-[illegible]

BRUNSWICK
Foot of Union Street
Brunswick, Georgia 31521
Phone: 912 AM [illegible]

CHICAGO
[illegible] W. St. Charles Road
Berkeley, Illinois 60162
Phone: 312 [illegible] (local)
312 921-8242 (Chicago)

CLEVELAND
3500 Warrensville Center Road
Shaker Heights
Cleveland, Ohio 44122
Phone: 216 991 [illegible]

DALLAS
600 Exchange Bank Building
Dallas, Texas [illegible]
Phone: 214 FL 7 [illegible]

DETROIT
[illegible] W. [illegible]
Suite 227, Ofacenter Building
Detroit 35, Michigan
Phone: 313 [illegible]

HOUSTON
Bayou Building
3115 Allen Parkway
Houston, Texas 77019
Phone: 713 JA 6-4474

KANSAS CITY
4225 [illegible] Ridge Boulevard
Kansas City, Missouri 64133
Phone: 816 FL 3-8753

[illegible]
7800 [illegible] Drive
[illegible], Louisiana 70126
Phone: [illegible] CH 2-2240

SAN FRANCISCO
301 El Cerrito Plaza
El Cerrito, California 94532
Phone: 415 524-2455

WESTERN
Room 404, Tribune Building
143 So. Main Street
Salt Lake City, Utah 84101
Phone: 801 EL 9-2097

WILMINGTON
Wilmington Marine Terminal
Wilmington, Delaware 19899
Phone: 302 OL 6-7221

FIREPROOF GYPSUM BESTWALL BUILDING PRODUCTS

BESTWALL GYPSUM COMPANY
PAOLI, PENNSYLVANIA

SGP 0027260

BESTWALL

HUMMER SYSTEMS

THE MOST ADVANCED METHODS OF GYPSUM WALLBOARD CONSTRUCTION

COMPARE THE COSTS

Bestwall Hummer Systems **Single Layer Application**

PROVE to yourself how little it costs to get drywall performance of superior quality.

FIREPROOF GYPSUM BESTWALL BUILDING PRODUCTS

MANUFACTURED BY BESTWALL GYPSUM COMPANY

Sold through: Bestwall Certain-teed Sales Corporation
120 East Lancaster Avenue, Ardmore, Pa

SGP 0027261

ESTIMATE OF MATERIALS AND LABOR TO CONSTRUCT 10

ITEM	CONSTRUCTION DESCRIPTION	MISCELLANEOUS MATERIAL		NAILS	LABOR HOURS & COST
1	2" x 4" Framing (16" on-center)	2" x 4" 100 sq. ft.		½ lb.	2 hr.
2	1" x 2" Furring (16" on-center)	80 lin. ft.		½ lb.	1 hr.
3	⅜" Bestwall Gypsum Wallboard (100 sq. ft. Wallboard applied to wood frame 16" on-center)				
4	½" Bestwall Gypsum Wallboard (100 sq. ft. Wallboard applied to wood frame 16" on-center)				
5	⅝" Firestop Bestwall Gypsum Wallboard (100 sq. ft. Wallboard applied to wood frame 16" on-center)				
6	Bestwall Hummer System "A" (Solid Lamination) 100 sq. ft. one surface complete applied to wood frame 16" on-center	⅜" Back Bd. 100 sq. ft.		½ lb.	30 min.
7	Bestwall Hummer System "D" (Strip Lamination) 100 sq. ft. one surface complete applied to wood frame 16" on-center	⅜" Strips 33 sq. ft.		⅓ lb.	15 min.
8	Bestwall Hummer System "B" Non-load Bearing Partition (100 sq. ft. gives 2 sides finished)	Wood Runners 1" x 1⅝" 30 lineal ft		¼ lb.	30 min.
9	Bestwall Hummer System "C" Movable Partition Non-load Bearing (100 sq. ft. gives 2 sides finished)	Wood Runners ¾" x 1⅝" 30 lineal ft.		¼ lb.	30 min.
10	Bestwall Hummer System "B" Self-Furring Wall	Shims 20	Mastic 1 Pt.		15 min.
11	Bestwall Hummer System "C" Self Furring Wall	20	1 Pt.		15 min.
12	½" Bestwall Gypsum Wallboard over masonry wall on furring 16" on-center; Line 2 plus Line 4				
13	Bestwall Hummer System "D" (Strip Lamination) 23' x 35' Ceiling	⅜" x 8" strip 305 sq. ft.		1 lb.	2½ hrs.
14	Back Blocking; 23' x 35' Ceiling		Cuttings 245 sq. ft.	¼ lb.	4 hours

SGP 0027262

) SQ. FT. WALL (12½' LONG - 8' HIGH — NO OPENINGS)

GYPSUM WALLBOARD MATERIALS (FACE)						FINISHING MATERIALS					TOTAL COSTS (INCLUDING 25% PROFIT)	
GYPSUM RIBS	FACE GYPSUM WALLBOARD	ADHESIVE	NAILS	SCREWS	LABOR HOURS & COST	METAL CORNER BEAD	LABOR	JOINT TREATMENT			100 SQ. FT. (ONLY)	FINISHED WALL 100 SQ. FT. SURFACED ON BOTH SIDES
								TAPE	CEMENT	LABOR HOURS & COST		
												Not Applicable
												Not Applicable
	100 sq. ft.		½ lb.		35 min.	1 ft.	1 ft.	40 ft.	5 lb.	40 min.		
	100 sq. ft.		½ lb.		40 min.	1 ft.	1 ft.	40 ft.	5 lb.	40 min.		
	100 sq. ft.		½ lb.		45 min.	1 ft.	1 ft.	40 ft.	5 lb.	40 min.		
	100 sq. ft. ⅜" Board	Lam. Comp. 1.6 lb.	⅛ lb.	6	45 min.	1 ft.	1 ft.	40 ft.	5 lb.	30 min.		
	100 sq. ft.	0.6 lb.	⅛ lb.	6	45 min.	1 ft.	1 ft.	40 ft.	5 lb.	30 min.		
1" Ribs 6¼" & 3½" 34 sq. ft	200 sq. ft. ⅝" Firestop	Lam. Comp. 1.5 lb.	0.1 lb.	20	2½ hr.	2 ft.	2 ft.	80 ft.	10 lb.	1 hr.	Not Applicable	
	"C" Panel 24" width 200 sq. ft	Mastic (Non-setting)	0.1 lb.	20	2½ hr.	Moulding 40 ft. #105 sq. edge	40 ft. mldg.				Not Applicable	
1" Ribs 6¼" & 3½" 34 sq. ft.	½" Board	Lam. Comp. ¼ lb.	0.1 lb.	10	1½ hr.			40 ft.	5 lb.	30 min.		Not Applicable
	"C" Panel 24" width 100 sq. ft		0.1 lb.		1½ hr.	Moulding 20 ft #105 sq. edge	20 ft. mldg.					Not Applicable
												Not Applicable
	½" Face Board 830 sq. ft (C Taper)	Lam. Comp. 5 lb.	1 lb.	235	6¼ hr.			320 ft.	40 lb.	4 hr.		Not Applicable
	830 sq. ft.	Joint Cement 15 lb.	5 lb.		5¼ hr.			320 ft.	40 lb.	4 hr.		Not Applicable

Get your copy of detailed plans and specifications on the following 4 systems

BESTWALL HUMMER SYSTEM "A"

This is an improvement of the oldest and simplest laminated wallboard construction. Application is made over framed walls and ceilings. The first layer is nailed; the second layer is applied with adhesive and screws. A tapered edge board with a center taper is used on the ceiling. This system eliminates nail popping and joint beading and provides a perfect installation.

BESTWALL HUMMER SYSTEM "B"

This system was developed to provide walls without frame or support of any material other than gypsum wallboard. Designed for interior non-load bearing partitions or for simple, self-furring, free-standing wall surfacing over masonry walls. The interior partition provides one hour fire resistance.

BESTWALL HUMMER SYSTEM "C"

A factory-fabricated narrow panel of several layers of gypsum board, designed for non-load bearing walls where joints are left unfinished and for movable partition construction. Special edges give an attractive paneled effect. The panel can be erected, trimmed and painted in one day because there are no nails in the surface or joints to be treated.

BESTWALL HUMMER SYSTEM "D"

This application (Strip Lamination) is designed to prevent joint beading and delayed shrinkage and to eliminate nail "popping" at lowest cost, by putting all nails and fastenings under joint system tapes and trim. This system is less expensive than a standard two-layer application, yet the finished wall closely matches a complete double layer installation in performance.

Your best buy is FIREPROOF GYPSUM BESTWALL BUILDING PRODUCTS

Bestwall Gypsum Co. • 120 E. Lancaster • Ardmore, Pa.

Plants & Offices in Principal Cities