D.L. APPLICATION

FIG. 101 - SIDE VIEW

JACKETED VALVE COVER

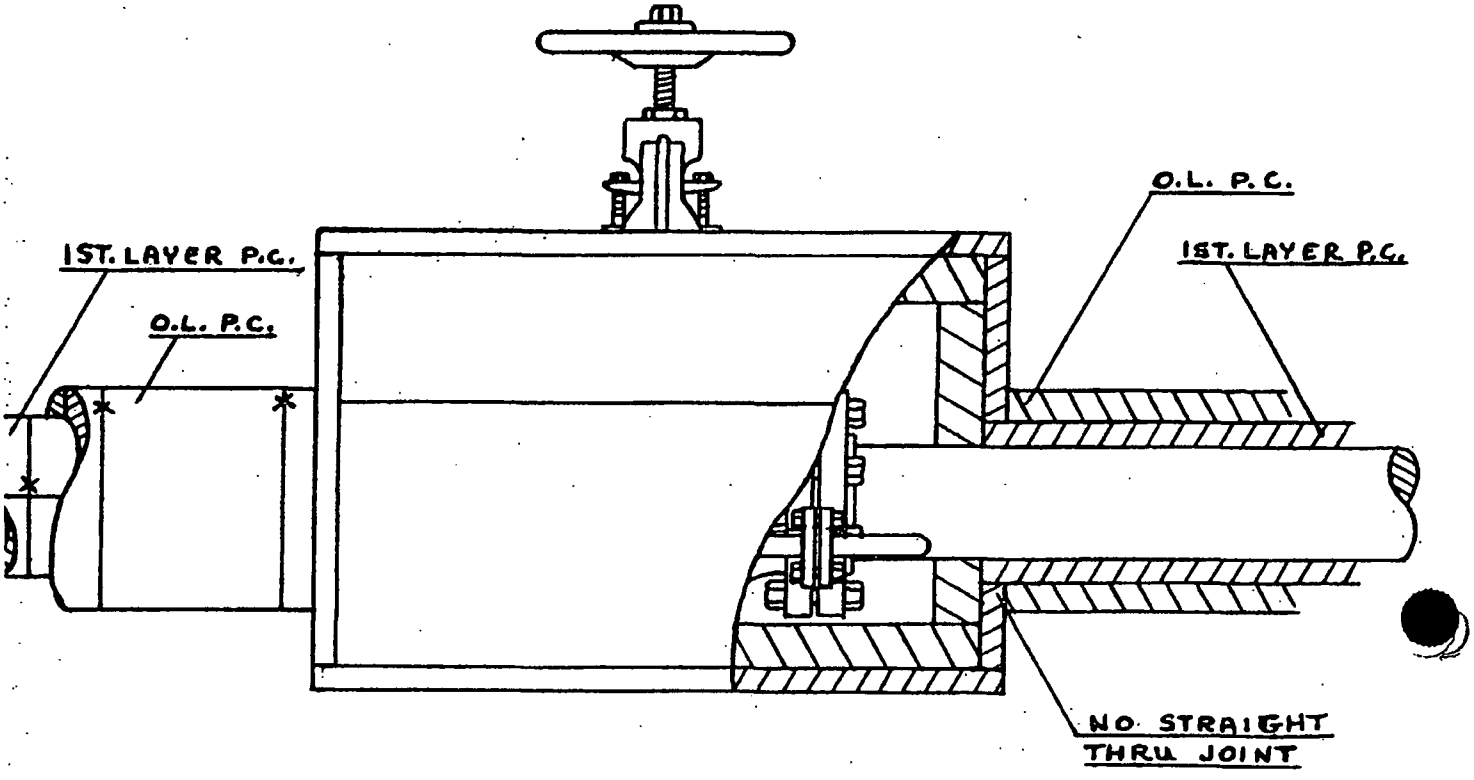

F 2 PERMANENT COVERS - VERTICAL

F 2.1 FLANGED JOINT - Without dow jumpers

2.1a This type of cover overlaps the 1st layer P.C. at the upper end but rest on the line insulation below the fitting as shown in Figure 63B on Page 1b 50.

2.1b The O.L. P.C. shall be butted snug to the fitting cover at both ends. See Figure 102.

2.1c Prevention of heat loss at the bottom of the cover is dependent upon full contact of the fitting cover to the line insulation.

2.1d Figure 102 is typical of the application of the line insulation and the permanent covers on flanged joints, with or without dow jumpers and on all other permanent, vertical flanged fittings without dow jumpers.