	Munch	TCC	Remarks
KD-01-601	0.24	0.52	
2/16 - 2/20			246 down to install HCl Scrubber
KD-02-602	0.40 (2nd)	1.02 (2nd)	1st TCC 1.79; sample date 2/25
2/27			scrubber column started up
~ 3/1			pumped HCl off gas storage system to #7 storage
KD-03-603	0.48	1.16	sample date 3/6
3/11			pumped HCl off gas storage system to #7 storage
3/12			pumped 1st batch scrubber liquor to #7 storage
3/13 KD-03-604	0.79	2.0	sample date 3/13
3/14 - 604	0.70	1.08	cleaned circulating filter at D54 storage, circulated #13 sto 2 hrs, resampled 3/14

DSW 310130

STLCOPCB4070117

		Munch	TCC	Remarks
3/15	-604	0.70	6.24 6.82 (2nd)	circulated #13 sto. 8 hrs, resampled 3/15
	#1 absorber	0.75	2.02	sampled #1 absorber 3/15
KD-03-605		0.78	1.04	cleaned circulating filter at storages, circulated #12 for 3 hours, sampled
	-604		8.81	resampled #13 sto. for TCC 3/15
				changed & cleaned #3 absorber polishing filter 3/15
3/16	-605	0.73	>5.0 1.1 (2nd)	circulated #12 sto. for 15 hours through storage filter at reduced pressure & rate, resampled #12 storage 3/16
	-601	0.40	0.83 0.59 (2nd)	ran check on reserve sample of lot -601 3/16
3/17	#7 storage		7.7	circulated and sampled #7 storage 3/17 color > 350 APHA H_2O 35 ppm free Cl^- 4.3 ppm

DSW 310131

STLCOPCB4070118

	Munch	TCC	Remarks
1/18			pumped HCl off-gas storage system to #7 storage 3/18
			sampled #13 sto., TCB, & scavenger for pilot proposal 3/18. pilot batch results in spec, pumped #13 storage (-604) to #3 mix and blended into 70/30 3/18
1/19			#12 storage (-605) loaded out of spec for 6.E. 3/19 per Benigno / Potter / Savage (small heel left in #12)
1/20			begin to work material through system from #7 sto. 3/ some of #7 storage material transfered to #1 mix 3/21
1/21			
#1 absorber	0.24	0.81	working #7 heel through 1254 system & to #13 storage
#13 sto.	0.70	1.79	sampled #1 absorber, #13 storage, & #16 storage 3/21
#16 sto. (1242)	0.08	0.27	
1/22			
#1 absorber	0.67	1.92	continue working #7 heel through 1254 system, composite
#13 storage	0.98	13.5	heel of #12 onto #13 storage middle shift 3/22 sample resultant #13 storage and #1 absorber 3/22 late shift. "Purged" 1254 still, receiver & surge tank
			ran ~ 3000 gal. isolated 1016 still bottoms through 1254 system 3/23 and out to #2 storage

STLCOPCB4070119

>1.0

	Munch	TCC	Remarks
25			
#12 storage	0.61	3.9	
# 3 surge	lost	0.51	sampled #12 storage and #3 surge ("isolated" 1254)
#13 storage	0.58	3.72	and resampled #13 storage days 3/25. ... 4 samples
			taken from (#3 rec & #1 abs 2$^{45}_{pm}$ & 10$^{00}_{pm}$). Start up
# 3 rec. 2^{45}	0.79	0.83	1254 system middles using "isolated" crude 3/25.
# 1 abs. 2^{45}	0.64	0.86	
# 3 rec 10^{00}	0.34	1.29	
# 1 abs. 10^{00}		7.12	
		7.67 (2nd)	

	H_2O	TCC	
26			
#3 surge		2.55 (0.009 A#)	begin 1254 from ~~second~~ "isolated" 1016 bottoms 3/26 days.
#5 absorber		0.51	Sample #3 surge and #5 absorber for TCC.
ba 735 before (tot Cl^- 57)	20 ppm		sample crude before chlorination in ba. chlorinator,
ba 736 before	15 ppm		and from #2 blow tank after 1 hour of blowing.
#2 blow (free HCl^-)			Also sampled #2 receiver for H_2O
#2 receiver	20 ppm		

begin doubling up on $FeCl_3$ on batch 737, middle shift 3/26

27

DSW 310133

STLCOPCB4070120

#13 storage

Date	Munch	TCC	Remarks
3/21	0.70	1.79	working remainder of "bad" heel from #7 storage
3/22	0.98	13.5	combined #12 sto. heel with #13 sto.
3/25	0.58	3.72	resampled in AM
3/25	0.79	0.83	" #3 receiver 2 45 "
	0.64	0.86	" #1 absorber 2 45 "
	0.34	1.29	" #3 receiver 10 00 "
		7.12 7.67 (2nd)	" #1 absorber 10 00 "

DSW 310134
STLCOPCB4070121

1254 program

what have we done?

1. changed storage tank circulating filters
2. changed polishing prefilter to #1 absorber
3. checked thermometer/hygrometers on batch chlorinators
4. checking $FeCl_3$ to batch chlorinators
5. checked #1 absorber & #3 surge stabilities
6. check #7 storage for moisture
7. blended "bad" 1254 into pyranols
8. shipped "bad" 1254 to G.E.
9. ran "isolated" column bottoms for 1254
10. checked chlorinators for moisture

what will we do?

1. doubling up on $FeCl_3$ with "isolated" feedstock
2. run fresh I^2 feedstock / return to "old" feedstock continue with double $FeCl_3$ charges, sample through system
3. check #1 absorber granular column
4. analyze crude before/after chlorination for stability (research assistance)

DSW 310135

STLCOPCB4070122

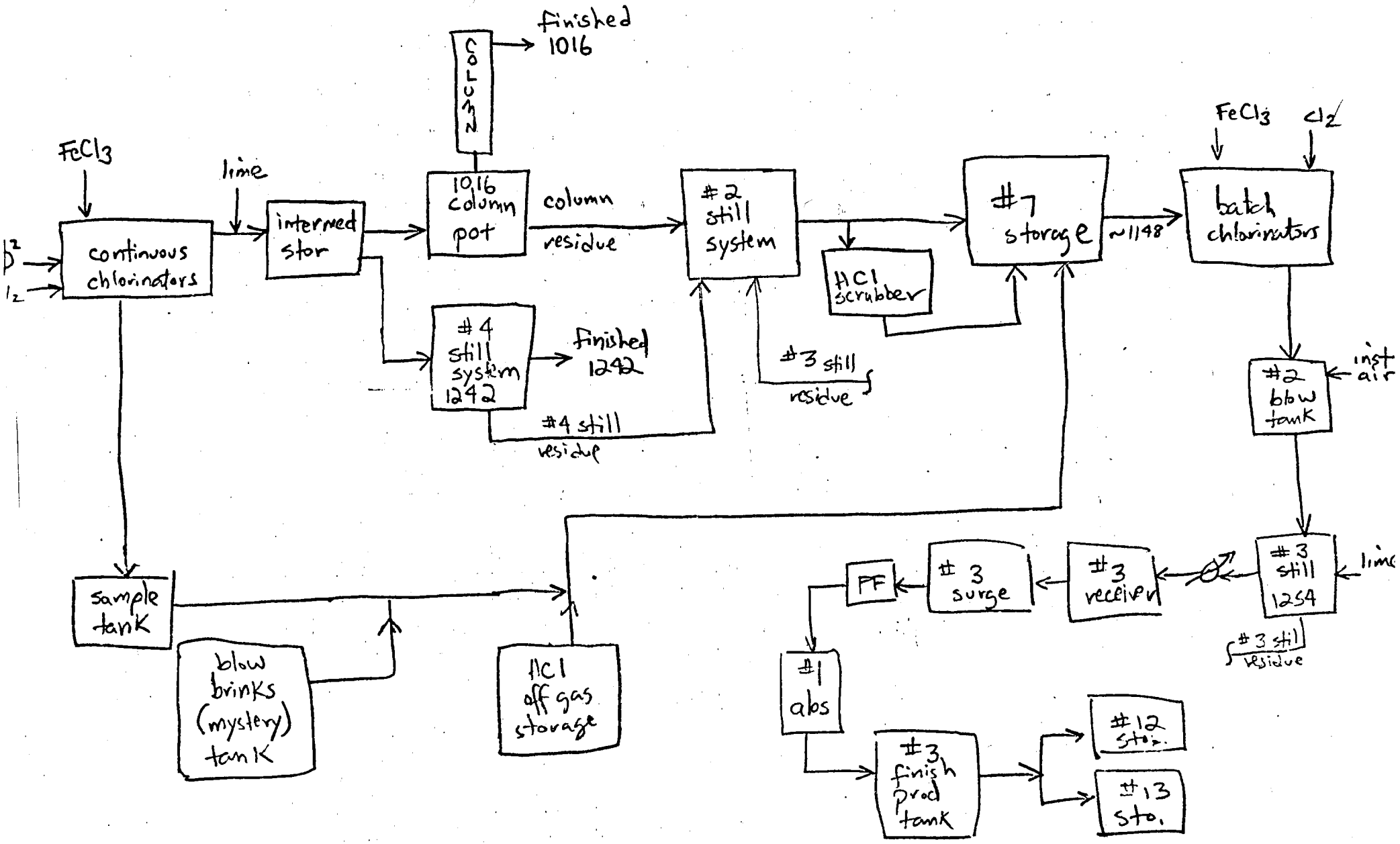

DSW 310136

STLCOPCB4070123