PLAINTIFF'S EXHIBIT
ETCO-548

CONTENTS

ITEM			PAGE
1.	GENERAL		2
	1.1	Intent	2
	1.2	OSHA COMPLIANCE	2
	1.3	Scope	2
	1.4	Line List	2
	1.5	Equipment List	2
	1.6	Special Requirements	2
2.	PIPING		3
	2.1	Material	3
	2.2	Securement	3
	2.3	Weatherproofing	3
	2.4	Fittings	3
	2.5	Details	3
	2.6	Hangers & Supports	3
	2.7	Single Layer	3
	2.8	Double Layer	3
	2.9	Supports	3
3.	EQUIPMENT		4
	3.1	Material	4
	3.2	Securement	4
	3.3	Weatherproofing	4
	3.4	Details	4
	3.5	Irregular Surfaces	4
	TABLE I, THICKNESS		5
	FIGURE 1 through 4 (Piping)		6-9
	FIGURE 5 through 12 (Equipment)		10-17

1.0 GENERAL

1.1 Intent. The intent of this specification is (1) to define the materials to be used for insulation of vessels, equipment, and piping in hot service, and (2) to define certain details of insulation application. The purpose of this insulation is to conserve heat (H) and/or to protect personnel (P). Any specific details not covered herein shall be in accordance with best area practice.

1.2 OSHA COMPLIANCE. All design and construction done in the United States under this specification shall be in strict compliance with the Williams-Steiger Occupational Safety & Health Act of 1970 (84 Stat. 1593, 1600; 29 U.S.C. 655, 657) as revised.

1.3 Scope. This specification covers the design and application of heat insulation systems for piping and equipment (vessels, columns, pumps, etc). It is intended to serve as a basis for contractor's bidding and performance. It is also intended to serve as a basic engineering guide to standardize and simplify the solution of recurring insulation problems.

1.4 Line List. A separate document, the LINE LIST indicates the pipe lines to be insulated in accordance with this specification. Insulation thickness will also be specified in the LINE LIST.

1.5 Equipment List. A separate document, the EQUIPMENT LIST, indicates the equipment to be insulated in accordance with this specification. The insulation thickness will also be specified in the EQUIPMENT LIST.

1.6 Special Requirements

a. Lower Limit. Surfaces normally operating at less than 200°F shall not be heat insulated unless specifically required for personnel protection or special process reasons.

b. Personnel Protection. Personnal protection insulation shall be applied to piping and equipment operating above 150°F which may be accidentally touched by personnel. Such hot surfaces shall be insulated to a height of 7' above or 3' to each side of normal walking or working areas (including platforms and ladders). Personnel protection insulation shall not be continued beyond normal working areas. Alternatively, guards of expanded metal may be used if specified by Ethyl.

c. Valves, Flanges, & Fittings. Valves, flanges, and fittings, except unions, in steam and boiler feed water service shall be insulated. Valves, flanges, and flanged fittings in other services shall not be insulated except where required for personnel protection or special process reasons. Welded and screwed fittings, except unions, in insulated lines shall be insulated; expansion joints shall not be insulated.

d. Steam Traps. Steam traps shall not be insulated except for personnel protection. Inlet piping to steam traps shall be insulated. Discharge piping which returns to a condensate collection system shall be insulated. Piping which discharges to a drain shall not be insulated EXCEPT FOR PERSONNEL PROTECTION.

e. Steam Tracing. Steam traced piping or equipment shall be covered with oversized insulation to include the tracer lines. Insulation thickness shall be selected from Table I. Steam traced systems shall be completely insulated including equipment, valves, flanges, fittings, and tracer line loops.

f. Hydro Test. All equipment shall be pressure tested before the application of insulation.

g. Nameplates. Nameplates shall not be insulated. Insulation surrounding vessel markings and plates shall be sealed to prevent water from entering.

2. PIPING

2.1 Caps Material. Piping to 1200F shall be insulated with calcium silicate, mineral fiber, or expanded perlite; all products shall be asbestos free. Acceptable materials are:

Calsilite, Calsilite 1200	
Celotex, Careytemp 1500	Johns Manville, Thermo 12
Eagle Picher, Epitherm 1200	Keene, Thermasil
Forty Eight, MF	Owens Corning, Kaylo 10
Holmes, Unisite	Pabco, Super Caltemp NA.

Other materials may be used with Ethyl Corporation approval. In periods of material shortage, piping to 400F may be insulated with Pittsburgh Corning Foamglas. Insulation thickness shall be as specified in the Line List; insulation thickness for piping not shown in the Line List shall be per Table 1.

2.2 Caps Securement. Tie wire shall be 18-8 soft-annealed stainless steel. 16 gage for 10" and smaller pipe. 14 gage for 12" and larger pipe.

2.3 Caps Weatherproofing. Insulation shall be weatherproofed with 0.016" thick x 3/16" corrugated aluminum with factory attached moisture barrier. Secure aluminum with ½" long x #8 stnls stl sheet metal screws on 9" centers. All laps shall be at least 2" and shall shed water.

stnls stl
Lower Case

2.4 Caps Fittings. Fittings smaller than 2" shall be covered with insulating cement (JM 450 or approved equal) and weatherproofed with GPM mastic (Ben Foster 35-01 alum gray or approved equal) 1/16" dry film thickness. Fittings 2" and larger shall be insulated with a material comparable to the adjacent pipe insulation and weatherproofed with GPM mastic (Ben Foster 35-01 alum gray or approved equal) 1/16" dry film thickness. The mastic shall be reinforced with Ben Foster Mast-a-Fab. Preformed aluminum fitting covers may be used if economical and available.

2.5 Caps Details. Details of piping insulation shall be AS SHOWN IN FIG~~URES~~ Lower case 1 through 4.

2.6 Caps Hangers & Supports. At all pipe hangers and supports, the necessary cutouts shall be carefully made and weatherproofed with heat resistant mastic, Foster 95-10 or approved equal up to 350F; above 350F use Eagle Picher Stalastic.

2.7 Caps Single Layer Application. For single layer application, the circumferential joints shall be staggered and the longitudinal joint shall be on the underside of horizontal runs.

2.8 Caps Double Layer Application. For double layer application, the inner layer shall be applied as the single layer in the preceding paragraph. The outer layer shall be applied with the joints staggered longitudinally and circumferentially with respect to the inner layer. Each layer shall be secured as shown for a single layer.

2.9 Caps Supports. Insulation on vertical lines shall be supported by ring flanges welded to the pipe. Supports shall be supplied by the Insulation Contractor or as directed by the Ethyl Engineer. Ring OD shall be ½" less than insulation OD. Start at bottom of line and install ring flanges at 21' intervals as needed. Allow for bolt removal at pipe flanges. See Fig. 2.

3. EQUIPMENT

3.1 Material

a. Small Cylindrical. Equipment to 1200F and 24" and less in diameter shall be insulated with calcium silicate, mineral fiber, or expanded perlite pipe covering; all products shall be asbestos free. Acceptable materials are

Calsilite, Calsilite 1200	
Celotex, Careytemp 1500	Johns Manville, Thermo 12
Eagle Picher, Epitherm 1200	Keene, Thermasil
Forty Eight, MF	Owens Corning, Kaylo 10
Holmes, Unisite	Pabco, Super Caltemp NA.

Other materials may be used with Ethyl Corporation approval. In periods of material shortage, equipment to 400F may be insulated with Pittsburg Corning Foamglas.

b. Large Cylindrical. Equipment to 1200F and larger than 24" in diameter shall be insulated with curved block or beveled lags of the type and brand name specified in Para a above.

c. Flat. Flat surfaces to 1200F shall be insulated with flat block of the type and brand name specified in Para a above.

d. Thickness. Insulation thickness shall be as specified in the Equipment List. Insulation thickness for equipment not shown in the Equipment List shall be per Table 1.

3.2 Securement. Bands for equipment insulation shall be $\frac{3}{4}$" x 0.020" 18-8 ~~stainless steel~~ stnls stl with 18-8 ~~stainless steel~~ stnls stl seals, A. J. Gerrard or equal. 12" on centers.

3.3 Weatherproofing

a. Vertical Jacket. Vertical straight shells shall be weatherproofed with 0.016" thick x $1\frac{1}{4}$" corrugated aluminum with factory attached moisture barrier.

b. Horizontal Jacket. Horizontal straight shells shall be weatherproofed with 0.016" thick smooth aluminum with factory attached moisture barrier.

c. Vertical Seams. Vertical seams in aluminum jacketing shall be secured with $\frac{1}{2}$" long x #8 stnls ~~stl~~ case stl sheet metal screws on 6" centers.

d. Circumferential Seams. Circumferential seams in aluminum jacketing shall be secured with a $\frac{3}{4}$" x 0.020" 18-8 ~~stainless steel~~ stnls stl band at each seam. Continue to apply bands circumferentially on 18" centers. stnls stl

e. Z Clips. Z support clips made from $\frac{3}{4}$" x 0.020" ~~stainless steel~~ band shall be installed at the circumferential seams on 18" centers on vertical vessels.

f. Projections. At all projections (nozzles, brackets, etc) the necessary cutouts shall be carefully made and weatherproofed with heat resistant mastic, Foster 95-10 or approved equal up to 350F; above 350F use Eagle Picher Stalastic.

g. Heads. Heads shall be weatherproofed as detailed in Fig 6. Alternatively, if economical, available, and approved by Ethyl, a formed cover of 0.020" thick smooth aluminum with factory attached moisture barrier may be used.

3.4 Details. Details of equipment insulation shall be as shown in Figures 5 through 12.

3.5 Irregular Surfaces. Pumps, turbines, and other irregular surfaces sh[illegible] and weatherproofed the same as vessel heads.

TABLE 1

Recommended minimum thickness, nominal inches pipe insulation for personnel protection

(Surface Temperature less than 161°F., Ambient Temperature 80°F.)

Nominal Pipe Size	Temperature Hot Pipe, °F.										
	TO 200	201-300	301-400	401-500	501-600	601-700	701-800	801-900	901-1000	1001-1100	1101-1200
1" and Less	1	1	1	1	1	1	1½	1½	1½	2	2
1½"	1	1	1	1	1	1½	1½	1½	2	2	2
2"	1	1	1	1	1	1½	1½	1½	2	2	2½
3"	1	1	1	1	1	1½	1½	2	2	2½	2½
3½"	1	1	1	1	1	1	1½	1½	2	2	2½
4"	1	1	1	1	1	1½	1½	2	2	2½	2½
5"	1	1	1	1	1	1½	2	2	2½	2½	3
6"	1	1	1	1	1½	1½	2	2	2½	3	3
8"	1	1	1	1	1½	1½	2	2	2½	3	3
10"	1	1	1	1	1½	1½	2	2½	2½	3	3½
12"	1	1	1	1	1½	1½	2	2½	2½	3	3½
14" to 18"	1½	1½	1½	1½	1½	1½	2	2½	3	3	3½
20"	1½	1½	1½	1½	1½	2	2	2½	3	3½	3½

RECOMMENDED MINIMUM THICKNESS, NOMINAL INCHES, PIPE INSULATION FOR HEAT CONSERVATION.

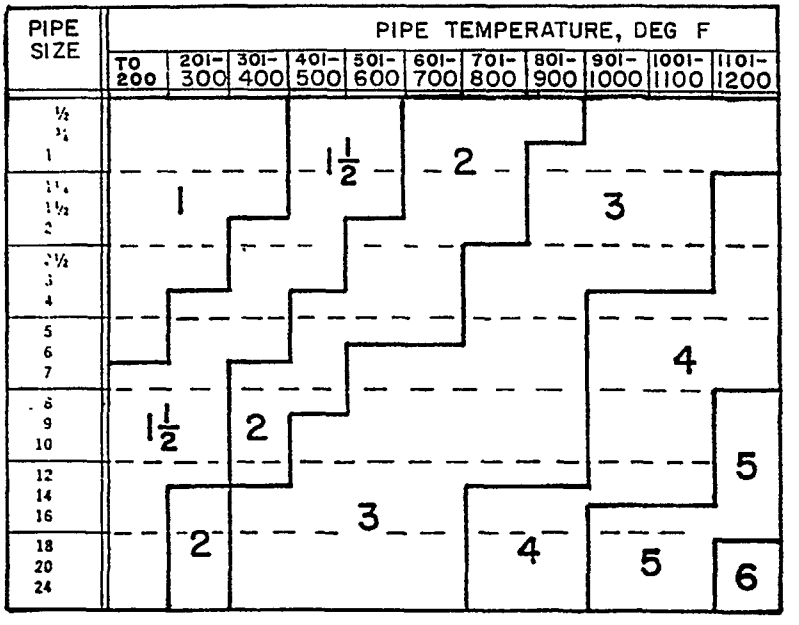

RECOMMENDED MINIMUM THICKNESS, NOMINAL INCHES, EQUIPMENT INSULATION FOR HEAT CONSERVATION.

Temperature Range	Thickness
Up to 200F	2"
301 to 700F	3"
701 to 900F	4"
901 to 1100F	5"
1101 to 1200F	6"

3

NOTE: Valves shall be insulated only in live steam and steam traced lines, and in lines operating over 800 F.

On valves 2" and smaller use insulating cement of proper thickness and finish as specified below.

On valves 2½" and larger use molded pipe insulation of proper size and thickness.

Over insulation apply a ¼" thick coat of JM352 OR APVD EQ finish cement and weatherproof with Foster GPM 35-01 Al gray Sealfas (1/16" dry film thickness). On sizes 2" & larger reinforce the weatherproofing with a layer of Foster Mast-a-Fab.

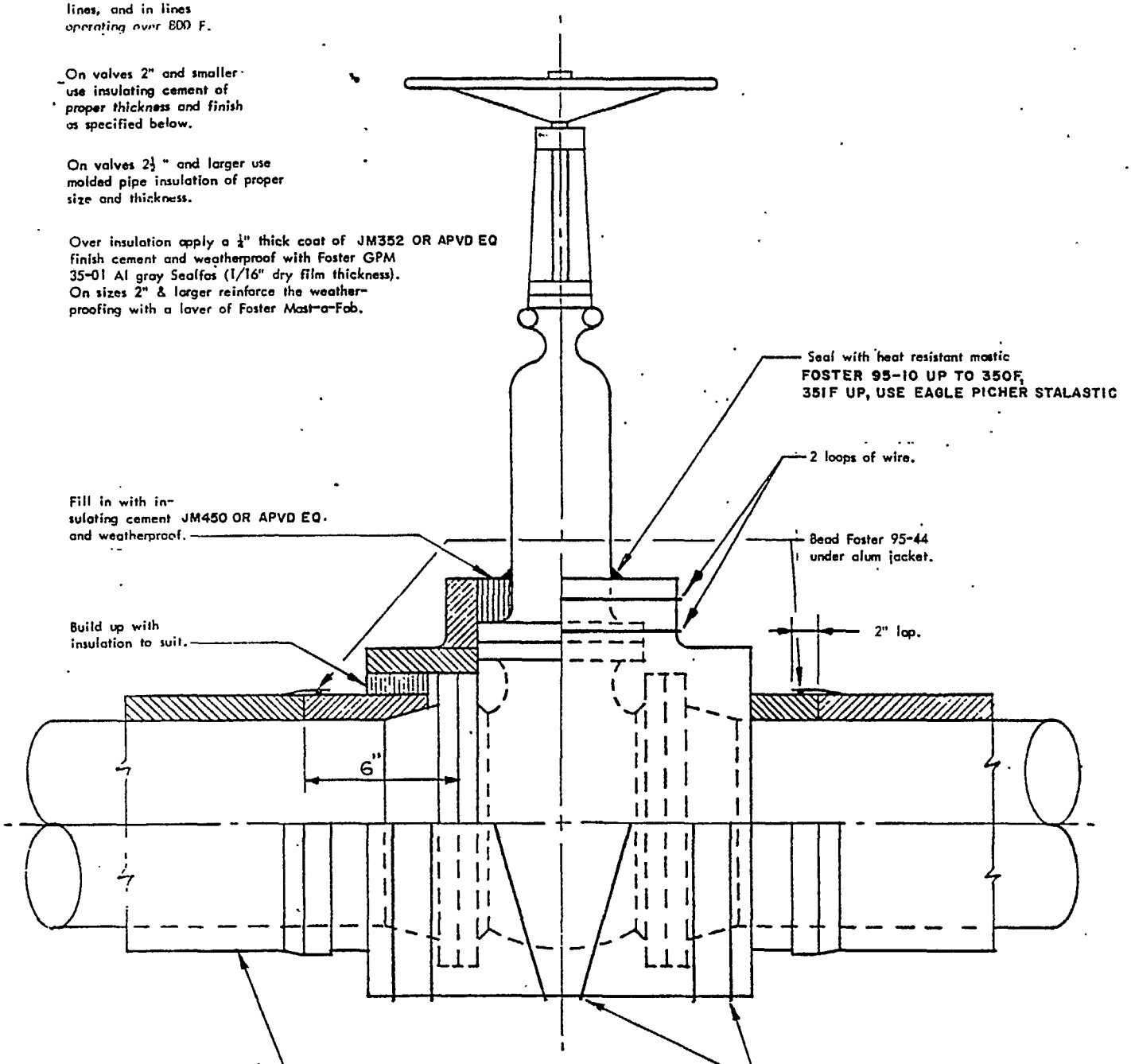

TYPICAL VALVE INSULATION

HOT SERVICE

FIG. 1

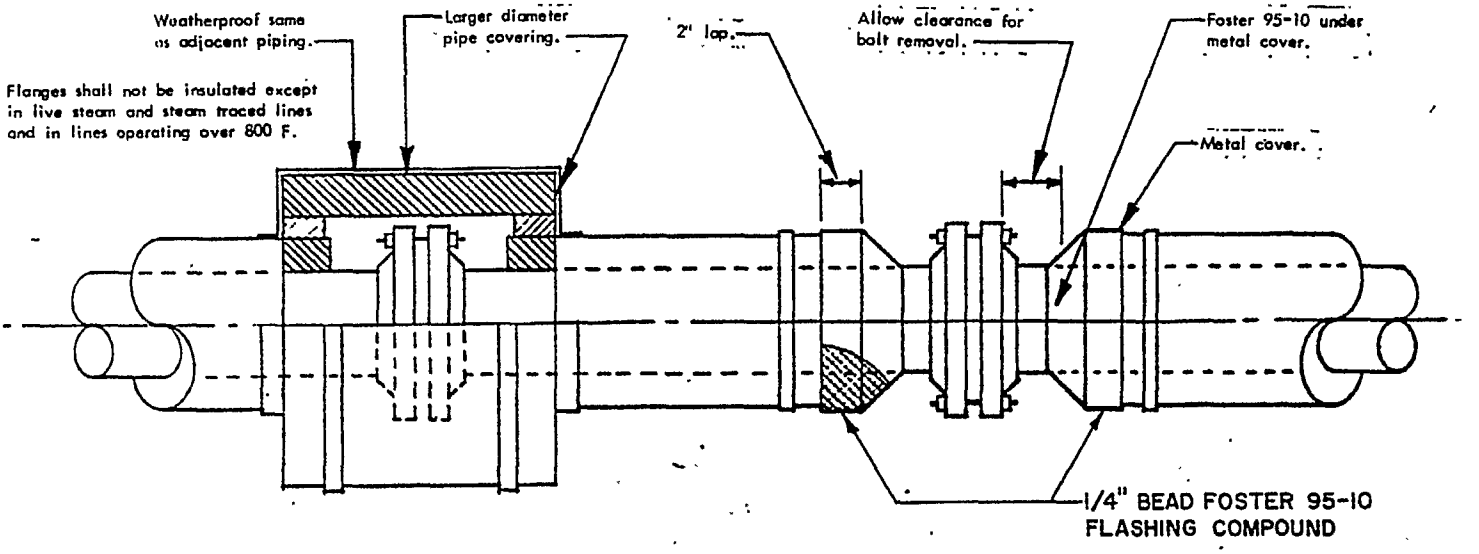

For piping insulation, wire, jacket, etc , see piping insulation details.

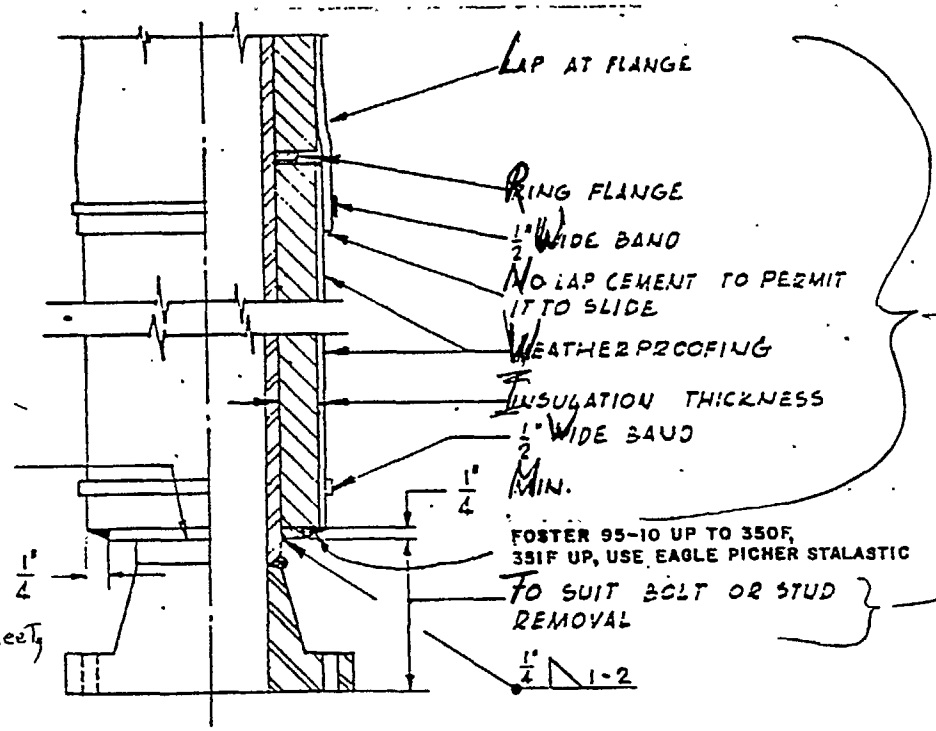

Type on Seperate Sheet of Paper

Please give seperate sheet

Type this all Caps & Underline →

VERTICAL PIPE INSULATION SUPPORT

INSULATION DETAILS

FLANGES

FIG. 2

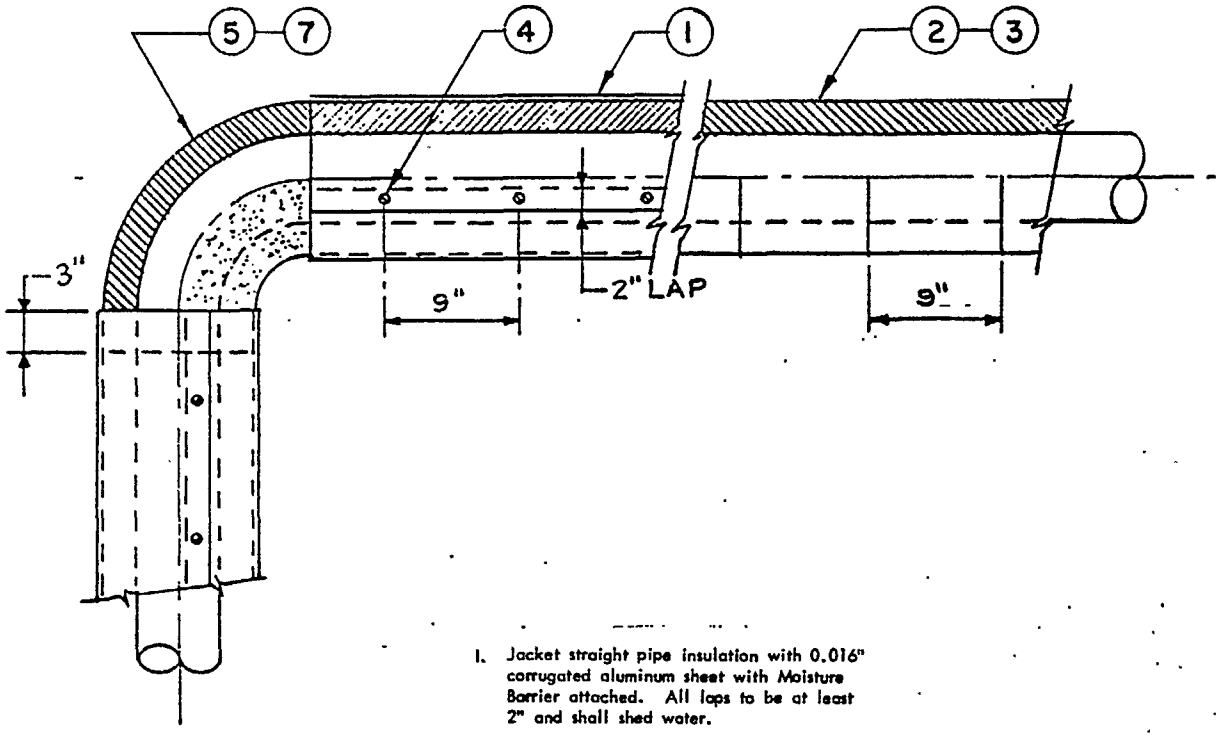

1. Jacket straight pipe insulation with 0.016" corrugated aluminum sheet with Moisture Barrier attached. All laps to be at least 2" and shall shed water.

2. Thickness of insulation in accordance with Schedule.

3. Secure pipe covering with 16 ga 18-8 wire on pipe 10" & under; 14 ga 18-8 wire on pipe 12" & larger.

4. SECURE JACKET W/ 1/2" LG X NO. 8 STNLS STL SHEET METAL SCREWS ON 9" CENTERS.

5. FITTINGS SMALLER THAN 2" SHALL BE COVERED W/ INSUL CEMENT (JM 450 OR APVD EQ) & WEATHERPROOFED W/ GPM MASTIC (FOSTER 35-01 ALUM GRAY OR APVD EQ) 1/16" DRY FILM THICKNESS. FITTINGS 2" & LARGER SHALL BE INSULATED W/ A MATERIAL COMPARABLE TO THE ADJACENT PIPE INSULATION & WEATHERPROOFED W/ GPM MASTIC 1/16" DRY FILM THICKNESS. THE MASTIC SHALL BE REINFORCED W/ BEN FOSTER MAST-A-FAB. PREFORMED ALUMINUM FITTING COVERS MAY BE USED IF ECONOMICAL & AVAILABLE.

6. Two layer insulation shall be applied with joints staggered longitudinally and circumferentially. Each layer shall be secured as shown for single layer. SEE PAR. 2.8.

7. Weatherproofing Foster GPM 35-01 alum gray to run 3" over jacket on vertical lines and 3" under jacket on horizontal lines.

TYPICAL PIPING INSULATION

HOT SERVICE

FIG. 3

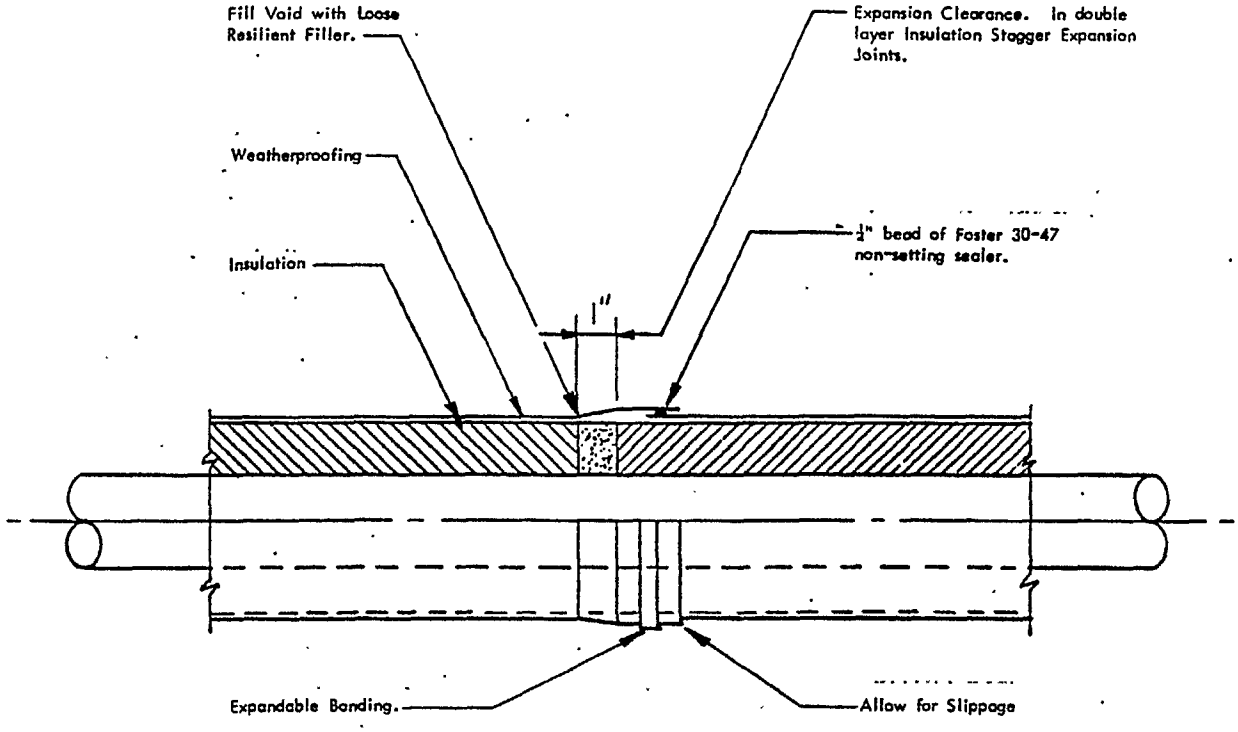

EXPANSION JOINT SPACING			
TEMP. OF LINE DEGREES F.	APPROX. SPACING REQ./FEET		
	Carbon Steel	Stainless Steel	Aluminum
300	50	35	25
425	35	20	17
550	20	17	11
675	17	12	--
800	15	11	--
1000	11	9	--
1200	8	6	--
1400	7	5	--

Allowance for LONGITUDINAL expansion of large pipe and fittings shall be based on 1" for each listed number of feet in the table.

DETAIL OF PIPE INSULATION EXPANSION JOINT

FIG. 4

Seal with heat resistant mastic, FOSTER 95-10 UP TO 350F, 351F UP, USE EAGLE PICHER STALASTIC

Insulation on head same thickness as on shell Secure blocks with 3/4"x.020" 18-8 St Stl insulation straps & seals spaced 12" apart on circumference. Apply tack coat of Foster 35-01 Al gray. Embed Foster Mast-a-Fab into tack coat. 1/16" total dry film thickness.

For method of weatherproofing vessel heads see Fig. 6.

For type & thickness of shell insulation see Schedule.

Insulation supports by vessel fabricator. For detail see Fig. 12.

1"x.020" Type 18-8 St Stl insul straps & seals spaced 12" o c over block insulation.

Fit metal jacket as close as possible around projections. Seal with heat resistant mastic, FOSTER 95-10. Use staggered joint construction. Seal cracks & joints with finish cement.

Allow 1" space for expansion joint under each support. For detail see Fig. 11.

For detail see Fig. 7.

Fireproofing as specified. Not by insul contractor.

Two layer insulation shall be applied with joints staggered longitudinally and circumferentially. Each layer shall be secured as shown for single layer.

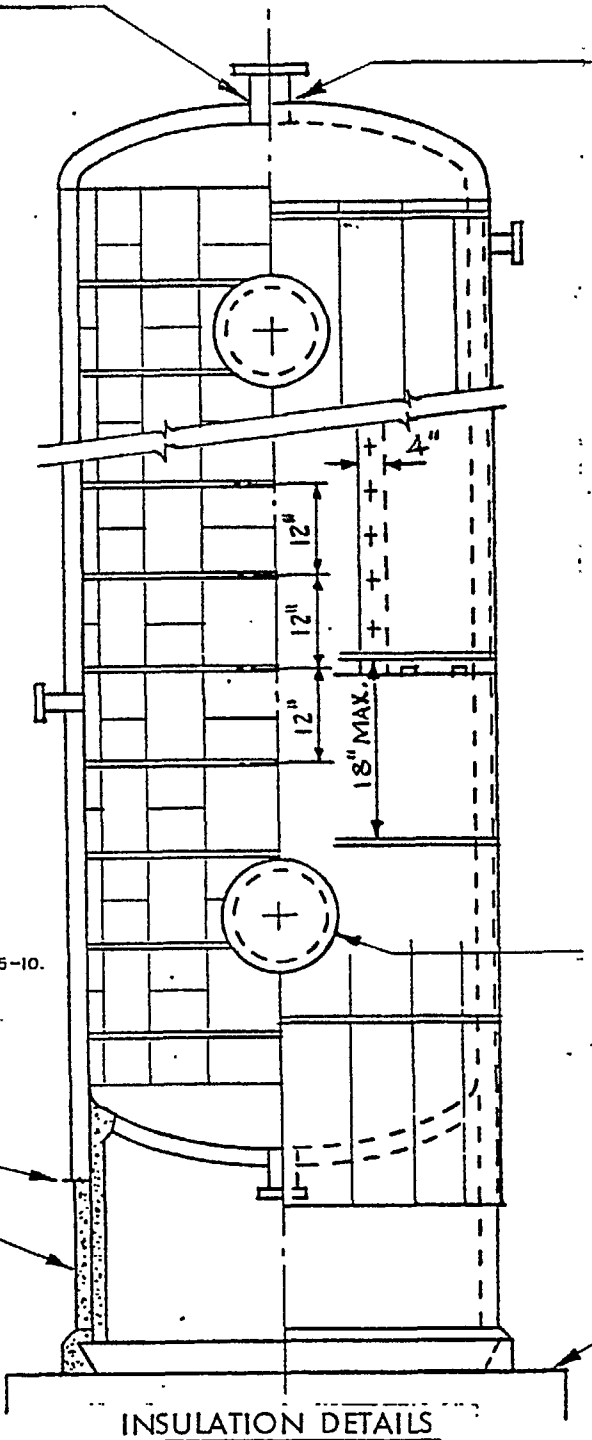

Nozzle insulation when required to be included in piping insulation.

For detail of floating ring see Fig. 6.

0.016" thick corrugated aluminum jacketing with moisture barrier attached.

Laps in jacket to be 4" on vertical seams & 3" on horizontal seams.

Apply jacket with No. 8 x 1/2" long STNLS STL sheet metal screws spaced 6" on centers on vertical seams.

3/4"x.020" 18-8 St Stl insul straps and seals at circumferential seams and not over 18" apart. For "Z" clips see Fig. 11.

Handholes & stiffener rings will not be insulated except where specified.

Stiffener rings shall be encased with aluminum flashing.

Insulate & finish bottom head same as top head.

INSULATE W/ REMOVEABLE COVER, IF PERSONNEL PROTECTION IS NECESSARY; OTHERWISE, DO NOT INSULATE.

Top of foundation.

INSULATION DETAILS

VERTICAL VESSELS

HOT SERVICE

FIG. 5

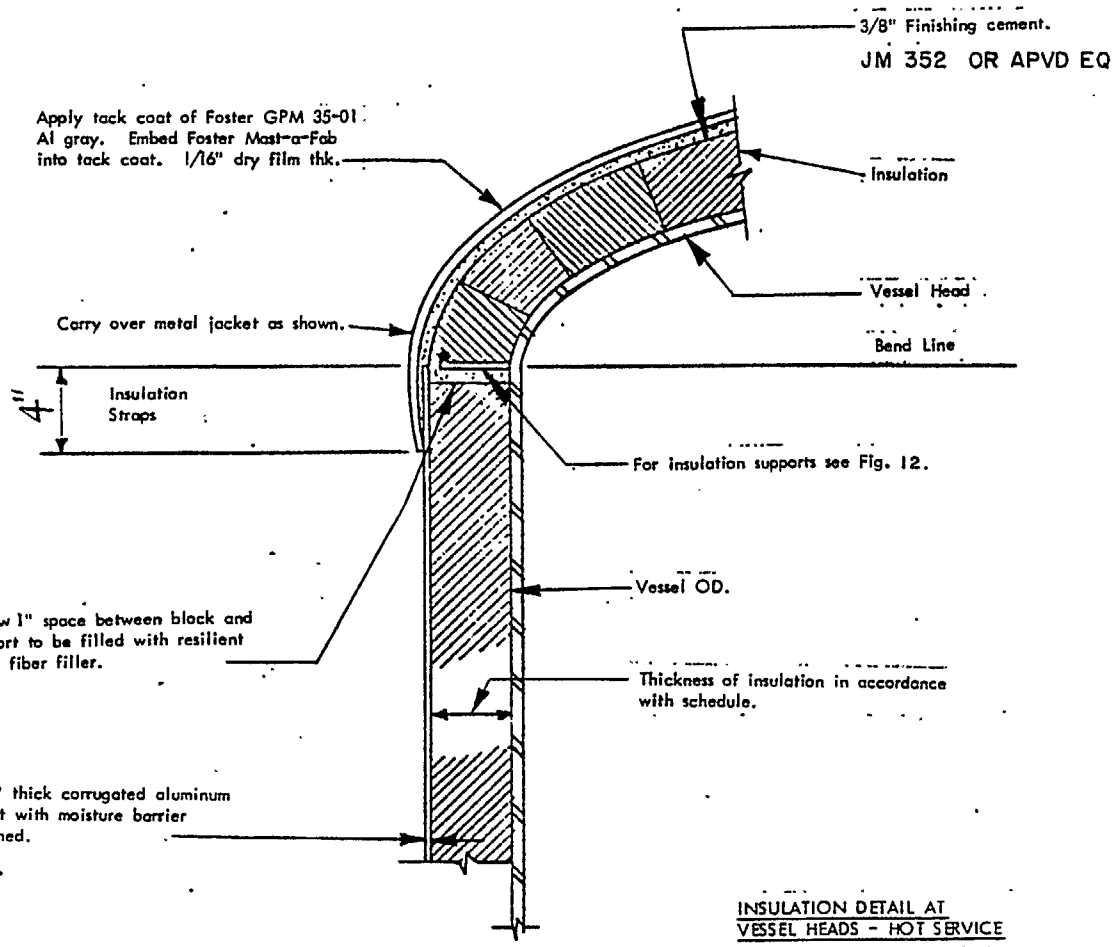

INSULATION DETAIL AT
VESSEL HEADS - HOT SERVICE

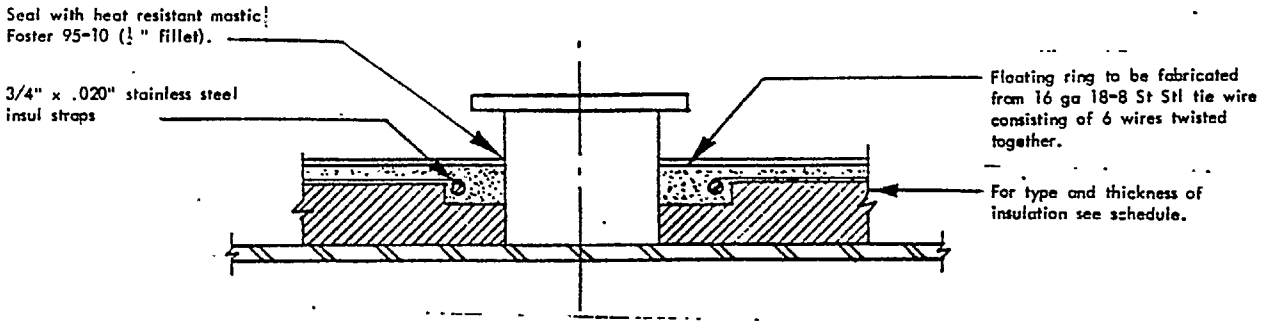

DETAIL OF

FLOATING RING

FIG. 6

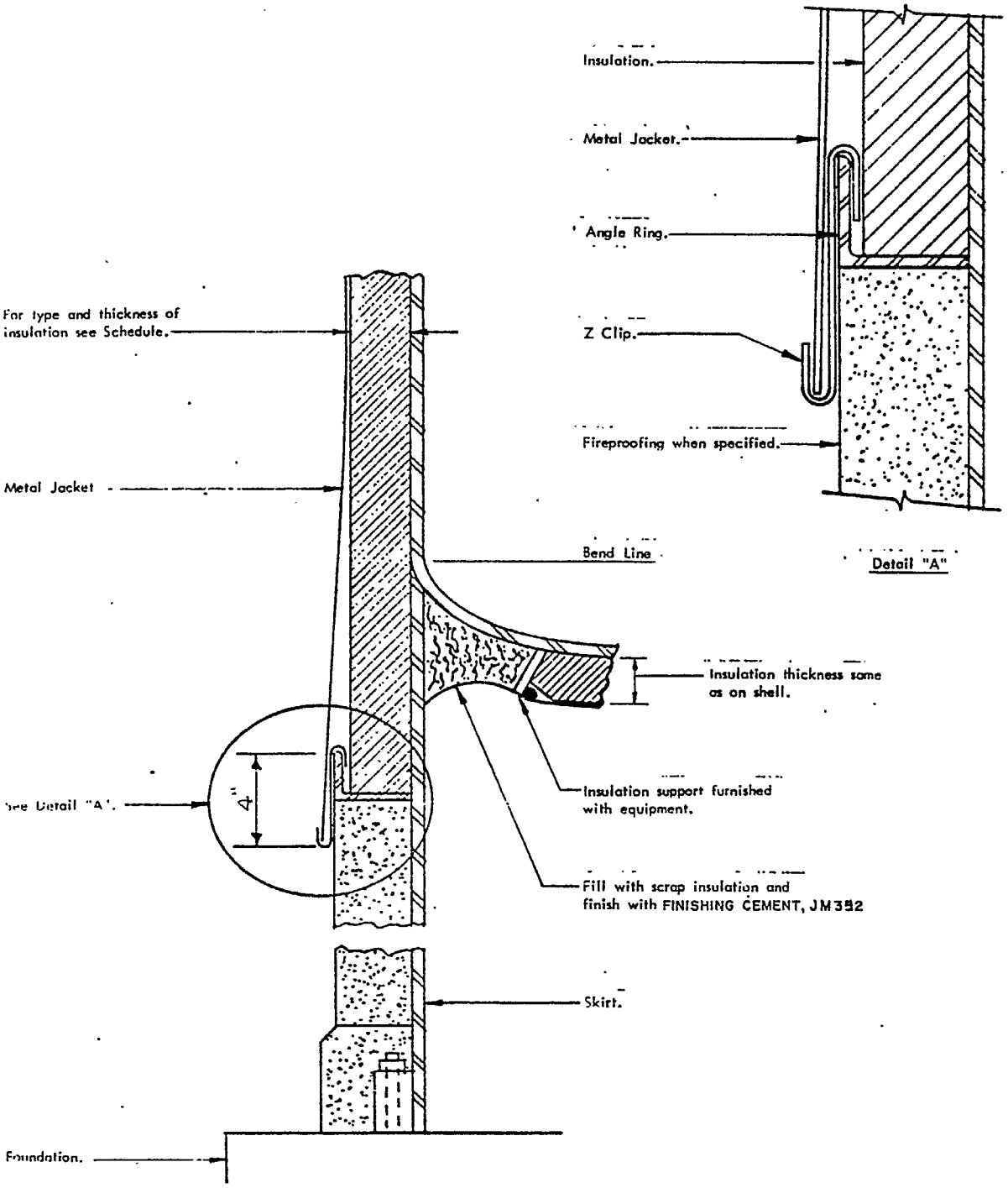

NOTE - Fireproofing of vessel skirts not by insul contractor.

DETAIL AT SKIRT

FIG. 7.

Over shell insulation apply .016" thick SMOOTH aluminum jacket with moisture barrier attached.

Insulation on heads shall be same thickness as on shell. Secure bolocks with 3/4" x .020" Type 18-8 St Steel Straps and Seals 12" apart on circumference. Apply tack coat of Foster 35-01 al gray. Embed Foster Mast-a-Fab into tack coat. 1/16" total dry film thickness

Laps in jacket shall be 4" on vertical seams and 3" on horizontal seams.

Apply jacket with No. 8 x 1/2" long STNLS STL sheet metal screws spaced 6" apart on both horizontal and vertical laps

INSULATE W7 REMOVEABLE COVER, IF PERSONNEL PROTECTION IS NECESSARY; OTHERWISE, DO NOT INSULATE. FOR DETAIL OF FLOATING RING, SEE FIG. 6.

For method of weatherproofing vessel heads see Fig. 6

Nozzle insulation, when required, to be included in piping insulation

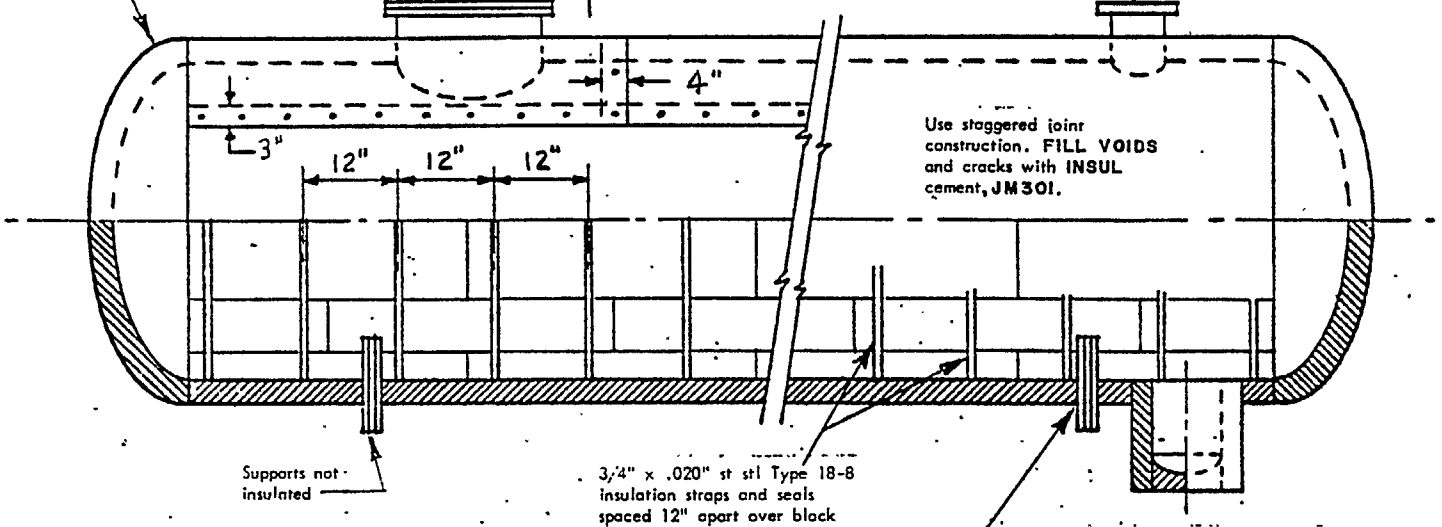

Use staggered joint construction. FILL VOIDS and cracks with INSUL cement, JM301.

Supports not insulated

3/4" x .020" st stl Type 18-8 insulation straps and seals spaced 12" apart over block insulation

For type and thickness of insulation, see Schedule

Fit metal jacket as close as possible around all projections. Seal with heat resistant mastic. FOSTER 95-10 UP TO 350F, 351F UP, USE EAGLE PICHER STALASTIC

Two layer insulation shall be applied with joints staggered longitudinally and circumferentially. Each layer shall be secured as shown for single layer.

INSULATION DETAILS

HORIZONTAL TANKS OVER 30" DIA.

FIG. 8

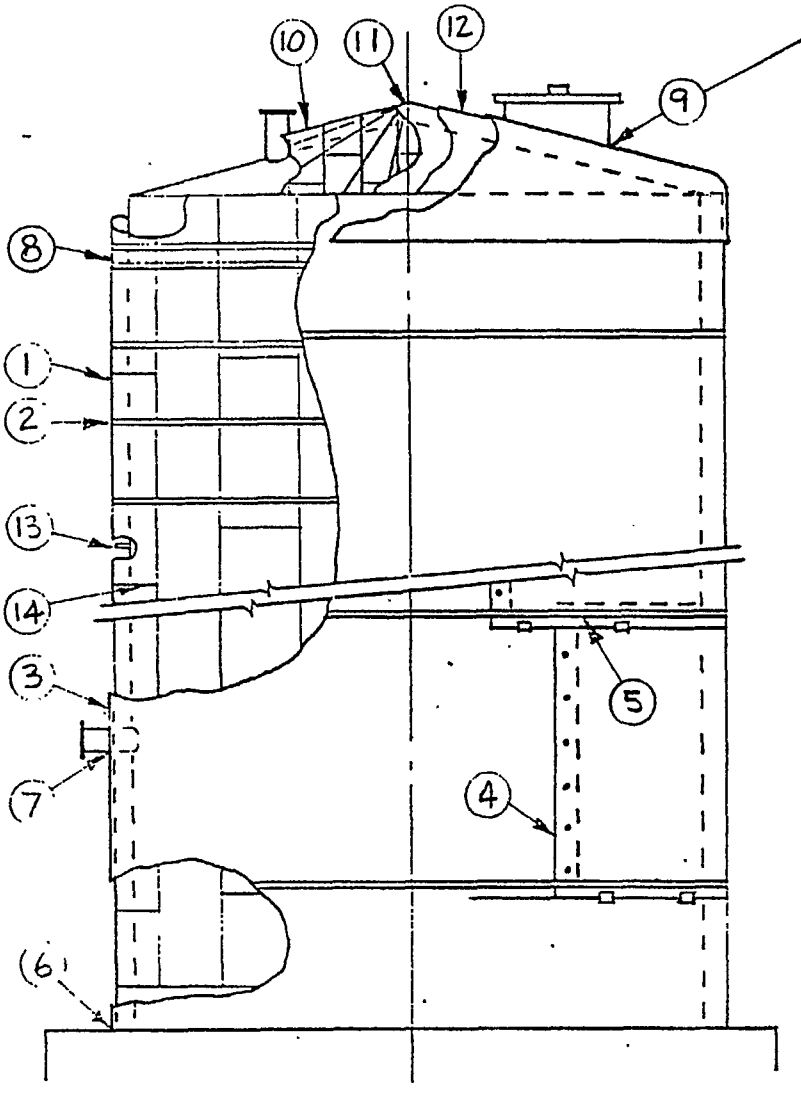

FOSTER 95-10 UP TO 350F, 351F UP, USE EAGLE PICHER STALASTIC

1. Block insulation. For type and thickness see schedule.
2. 3/4" x .020" 18-8 stainless steel insul straps and seals spaced 12" on centers over block insulation.
3. .016" thick corrugated aluminum jacket with moisture barrier.
4. Laps in jacket shall be 4" on vertical seams and 3" on horizontal seams using No. 8 x 1/2" long STNLS STL sheet metal screws 6" on centers on vertical seams.
5. 3/4" x .020" 18-8 stainless steel insul straps and seals at circumferential seams and not over 18" o c For Z clips see Fig. 11.
6. Impervious first course such as Foamglas or equal, sealed with Foster 95-44.
7. Fit metal jacket as close as possible around nozzles and projections. Seal with heat resistant mastic, Foster 95-10.
8. Use double straps at this point to secure lower end of head straps.
9. Flash and seal around projections and where roofing overlaps metal siding. Furnish floating rings where required to fasten insulation straps For detail see Fig. 6.
10. Use 3" wide block on roof same thickness as on shell. Secure blocks with 3/4" x .020" 18-8 stainless steel insul straps and seals spaced 12" apart on circumference.
11. Trowel on a 3/8" thick coat of JM301 finishing cement filling all voids and cracks.
12. Prime surface with asphalt primer and weather-proof with 2 plies of 15 lb saturated felt and one layer of 55 lb asbestos felt roofing in asphalt mopping.
13. Allow 1" space for expansion joint under each support. For details see Fig. 11. Insul supports by tank fabricator.
14. Staggered joint construction shall be used. Two layer insulation shall be applied with joints staggered circumferentially and longitudinally. Each layer shall be secured as shown for single layer.

INSULATION DETAILS

HOT STORAGE TANKS

FIG. 9

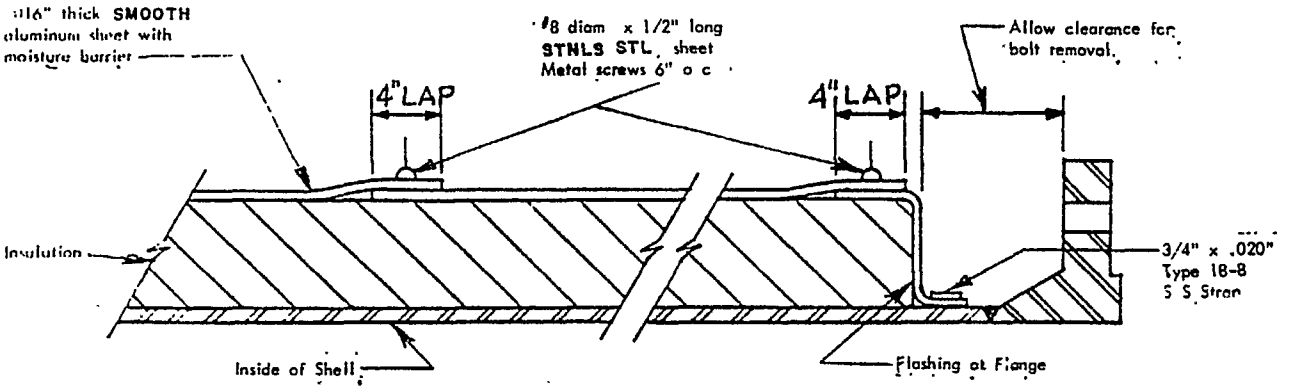

CIRCUMFERENTIAL SEAM DETAILS
HORIZONTAL VESSELS

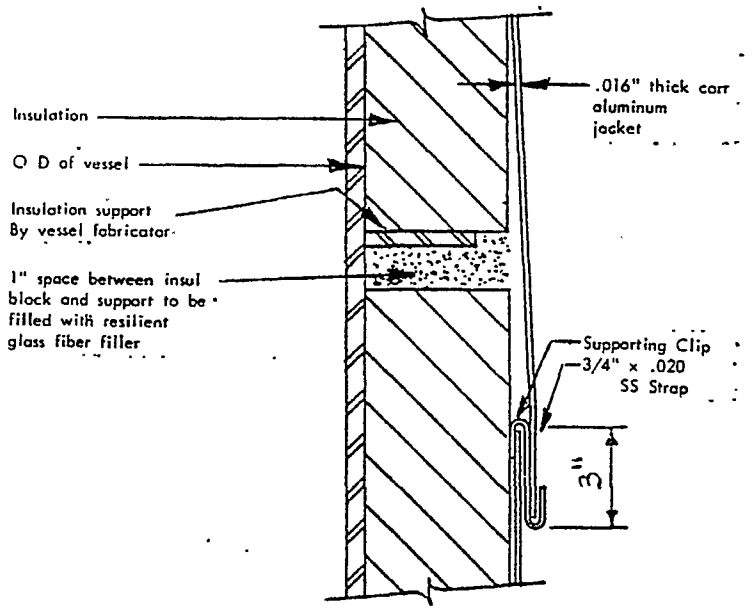

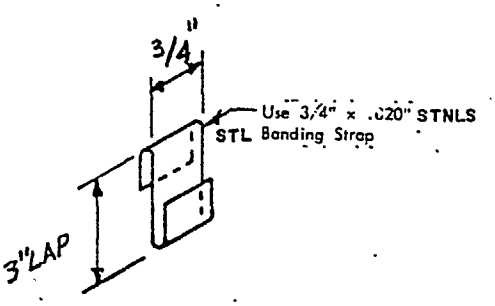

DETAIL OF Z CLIP

Clips to be spaced approximately 18" apart or a minimum of four clips per width of sheet.

HORIZONTAL SEAM DETAILS

VERTICAL VESSELS

FIG. 11

Jacket shall be cut to fit at nozzles and projections. Seal with heat resistant mastic, **FOSTER 95-10 UP TO 350F, 351F UP, USE EAGLE PICHER STALASTIC**

For detail of flashing at flanges see Fig. 11

Over shell insulation apply .016" thick **SMOOTH** aluminum jacket with mositure barrier attached

Laps in jacket to be 4" on vertical seams and 3" on horizontal seams

Apply jacket with No. 8 x 1/2" long **STNLS STL** sheet metal screws spaced 6" o c on all seams

SEAL AROUND NOZZLES W/ HEAT RESISTANT MASTIC, FOSTER 95-10 UP TO 350F, 351F UP, USE EAGLE PICHER STALASTIC

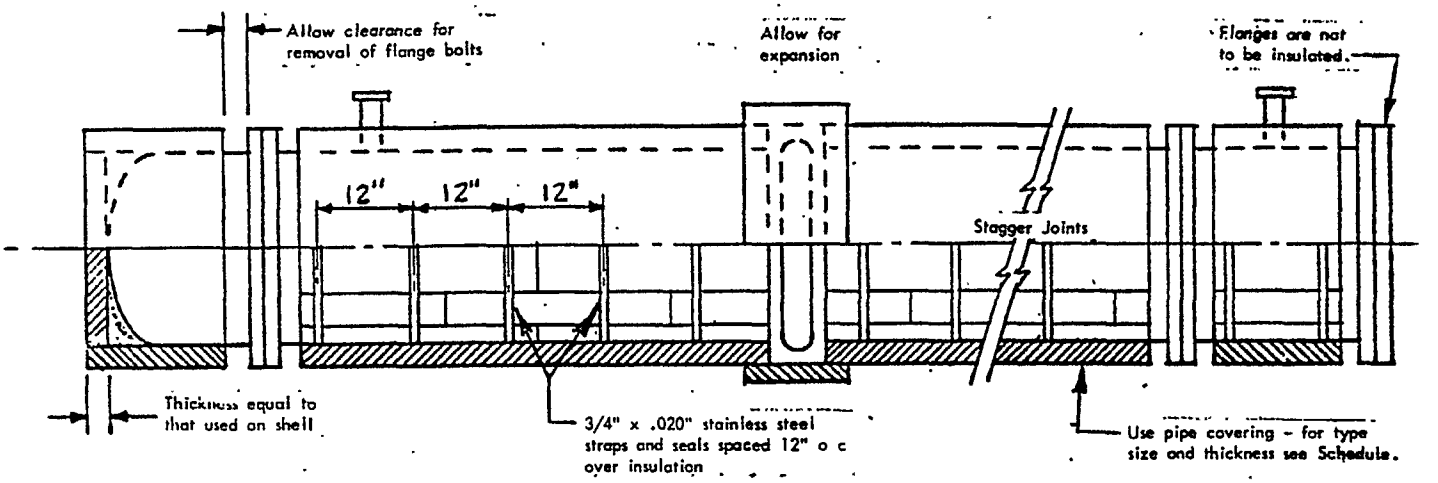

Furnish 20 gauge aluminum jacketing with attached *moisture barrier for* insulated removable ends, outdoors

Seal cracks and voids with finish cement, JM301

Nozzles when required shall be insulated per piping schedule.

NOTE: Exchangers over 30" in dia shall be insulated with beveled lags or curved blocks. Head insulation shall follow contour of the head

INSULATION DETAILS

EXCHANGERS-HOT SERVICE

FIG. 10

ETH 002277

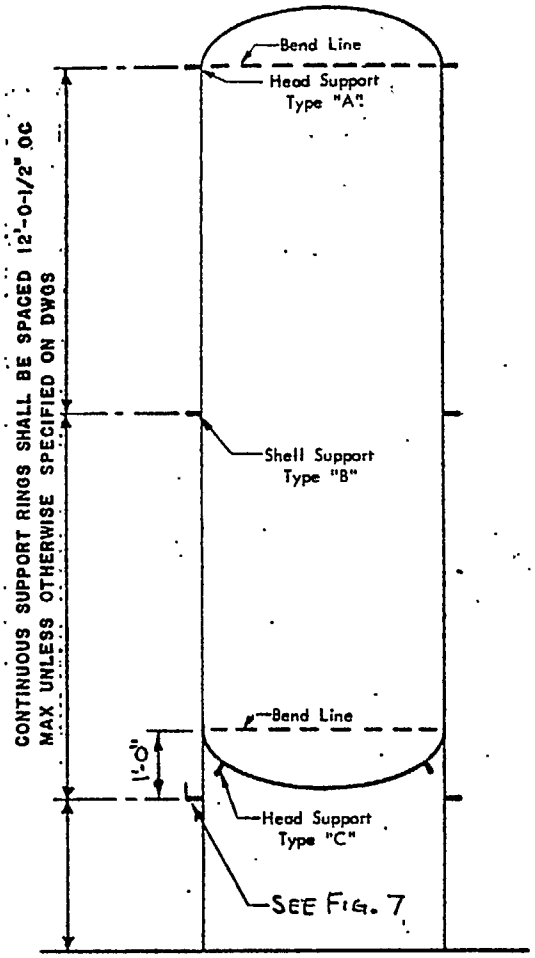

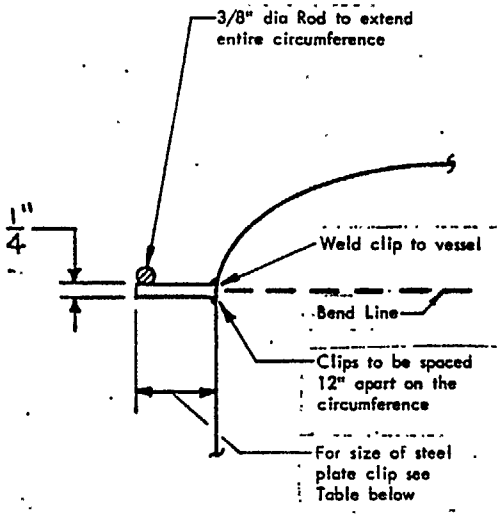

DETAIL OF HEAD SUPPORT TYPE "A"

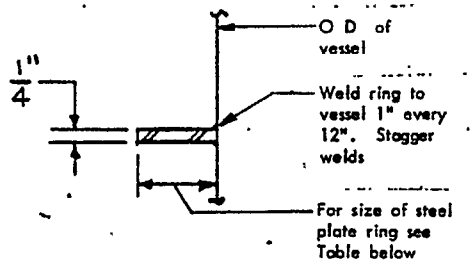

DETAIL OF SHELL SUPPORT TYPE "B"

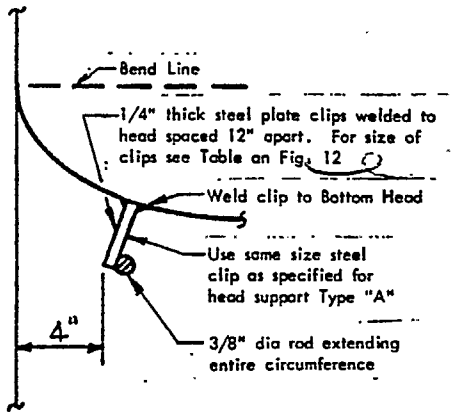

DETAIL OF HEAD SUPPORT TYPE "C"

INSULATION SUPPORTS
Table of Dimensions

Insulation Thickness	Support Type "A" Size Plate Clip	Support Type "B" Width Plate Ring
1"	$\frac{3}{4}$" x $\frac{3}{4}$"	$\frac{3}{4}$"
$1\frac{1}{2}$"	$1\frac{1}{4}$" x $1\frac{1}{4}$"	$1\frac{1}{4}$"
2"	$1\frac{3}{4}$" x $1\frac{3}{4}$"	$1\frac{3}{4}$"
$2\frac{1}{2}$"	2" x 2"	2"
3"	$2\frac{1}{2}$" x $2\frac{1}{2}$"	$2\frac{1}{2}$"
$3\frac{1}{2}$"	3" x 3"	3"
4"	$3\frac{1}{2}$" x $3\frac{1}{2}$"	$3\frac{1}{2}$"

NOTE: Insulation Supports by Vessel Fabricator

INSULATION SUPPORT DETAILS

ETH 002278

FIG. 12