controlled whereas the others are manually operated. The capacity is dependent, as for all compressors, upon the evaporator temperature, or in other words, the suction pressure. For example, the capacity is lowered approximately 17 per cent if the evaporator or chilled water temperature is lowered from 50 to 45 F. The capacity therefore can be controlled to some extent by regulating the evaporator temperature.

The Absorption System

The fundamental rule governing the absorption (in a closed system) of a gas by a liquid is Raoult's Law, which states that at any given temperature the ratio of the partial pressure of a volatile component in a solution to the vapor pressure of the pure component at the same tem-

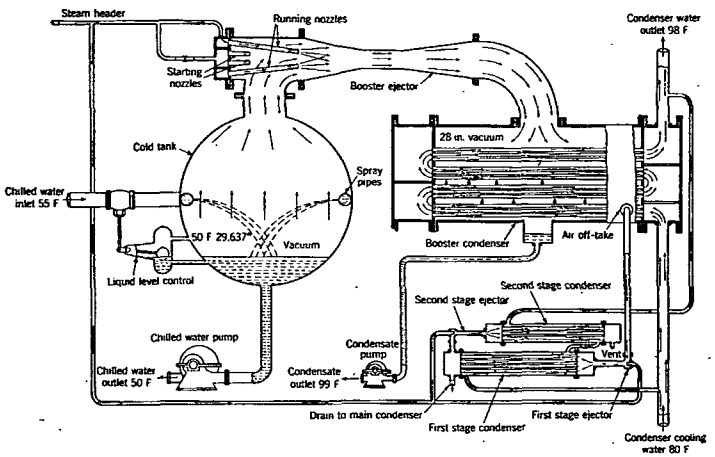

FIG. 2. DIAGRAMMATIC ARRANGEMENT OF STEAM JET VACUUM COOLING UNIT

perature is equal to its mol fraction in the solution. The mol fraction in turn is equal to the number of mols of substance divided by the total number of mols present. The number of mols in a given weight of a compound is equal to the weight divided by the molecular weight.

This law applies strictly only to what is known as an ideal solution, one in which the inter-molecular forces between the substances present in the solution are equal. Actually, no such solutions exist, so that deviations from Raoult's Law are always found in practice. The deviation is called positive when the observed pressure is greater than that calculated from Raoult's Law, while the term negative deviation refers to the opposite case. Negative deviations are found wherever chemical attraction exists between the solvent and the solute. Positive deviation occurs when there is a difference in the internal pressure of the components, chemical attraction between them being absent.

In order to make an effective absorption machine, large negative deviations from Raoult's Law must be shown by solutions of the refrigerant in the liquid absorbent, because the larger the negative deviation, the greater is the amount of refrigerant that can be cycled, using a given weight of absorbent. Cycling a large amount of refrigerant for a given

weight of absorbent is important because of the heat required to raise the temperature of the mixture and disassociate the refrigerant and the absorbent. Only the latent heat of the refrigerant can be recovered for useful work.

Many refrigerant-absorbent combinations have been proposed and quite a number have been tested. A diagrammatic representation of a typical closed absorption system is outlined in Fig. 3. In this system a mixture of refrigerant and absorbent is evaporated in the generator, passes to an analyzer and rectifier where it is purified, and then to a condenser where the refrigerant and remaining absorbent are condensed. It then passes through an expansion valve to an evaporator, where heat is absorbed from a cooling load. From the evaporator the vapor and resi-

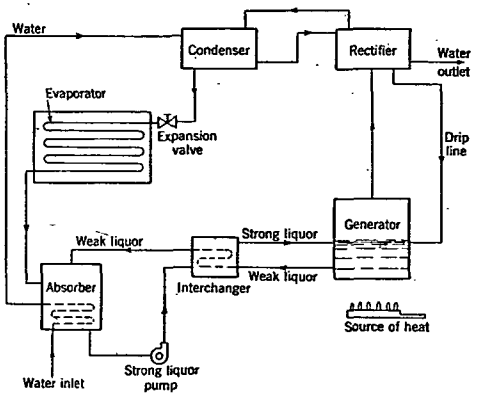

FIG. 3. CLOSED ABSORPTION SYSTEM

dual absorbent passes to an absorber where it meets absorbent which is initially low (weak) in refrigerant concentration. The absorbent absorbs the vapor and the strong absorbent liquor is transferred to the generator through an interchanger with the weak liquor returning from the generator.

A cooling medium, ordinarily water, is used in the absorber to remove the heat of absorption and maintain the absorptive power of the absorber at a maximum.

Like the steam jet system, the absorption system compares most favorably when a cheap source of cooling water and steam or other heat is available. Unlike the steam jet system, the comparative performance is usually best with a wide range of temperature between the evaporator and absorber, since with a good refrigerant-absorbent combination, the amount of heat and water required for a given refrigerating effect increases slowly with an increase of evaporator-condenser temperature range.

At the present time the most used refrigerant-absorbent combinations are: (1) water and ammonia, and (2) dichloromonofluoromethane and dimethyl ether of tetraethylene glycol. With the latter combination the boiling points of the refrigerant and absorbent are sufficiently wide apart that almost pure refrigerant is obtained without the use of a rectifier.