In re: All Asbestos Litigation Filed by Simmons Cooper, Circuit Court, Third Judicial District, Madison Cty., IL; 11/17/05.

Eaton
Axles & Brakes

Eaton Corporation
Axle & Brake Division
P.O. Box 4008
Kalamazoo, Michigan 49003
(616) 342-3018

February 5, 1988

Mike Brooks
Chief Engineer
Oshkosh
2307 Oregon Street
P.O. Box 2566
Oshkosh, WI 54903

Dear Mike:

EATON

On December 2, 1987, you wrote me regarding HEMTT coined and non-asbestos brakes. In order for you to propose this change to the U.S. Army, I offer the following.

1) New Eaton part numbers were assigned to correspond with new Oshkosh part numbers and are shown on attached chart. These new brakes include non-asbestos linings and coined shoes.

2) A new coining operation was implemented to obtain a greater consistency in final component geometry and a subsequent reduction in variation in brake torque output. The coining of the shoe assembly returns the shoe to the desired radius after distortion by the weld process. To further assure optimum lining to drum contact for all possible conditions, both the shoe radius and the radius tolerance were reduced 0.010 inches (see Fig. 1).

   By controlling the self energizing forces generated by pressure distributions surrounding the initial contact point of the lining to the drum, a significant reduction in brake to brake variation is achieved while output torques remain within the ban of the original, non-coined, configuration (Figs. 2-4). Because vehicle stopping distances are controlled by the initial lock up of a single wheel, this new brake output consistency permits improved performance with reduced premature lockup.

3) The cost impact will add $6.42 per brake assembly.

4) We would like to introduce this change effective June 1, 1988. At that time, our inventory of asbestos linings should be depleted.

Telex 224305
Telecopier (616) 342-3019
Shipping Address: 13100 E. Michigan Avenue, Galesburg, Michigan 49053

In re: All Asbestos Litigation Filed by Simmons Cooper, Circuit Court, Third Judicial District, Madison Cty., IL; 11/17/05.

In re: All Asbestos Litigation Filed by Simmons Cooper, Circuit Court, Third Judicial District, Madison Cty., IL; 11/17/05.

5) Drawings showing the coined shoe are enclosed for your review.

Eaton's request to change brakes on the LVS program to a coined shoe will be presented at a later date.

Should you have any questions, do not hesitate to call.

Regards,

L. E. Sengewalt
Account Manager

EATON

LES/pt
(2826s)

c: A. Bau
J. Clark
R. VanWormer

Enclosures

In re: All Asbestos Litigation Filed by Simmons Cooper, Circuit Court, Third Judicial District, Madison Cty., IL; 11/17/05.

HEMTT BRAKES WITH NON-ASBESTOS LININGS AND COINED SHOES

EATON PART NUMBER	DESCRIPTION	OTC OLD PART NUMBER	OTC NEW PART NUMBER	EATON NEW PART #
804839	Kit Brake	1307450	1654120	808933
804380*	Brake Shoe & Lining Assy	1329550	1654130	805714
804693*	Brake Shoe & Lining Assy	1314290	NONE	____
804952*	Brake Assy Front LH	1336620	1654140	808934
804953*	Brake Assy Front RH	1336610	1654150	808935
804955*	Brake Assy Rear RH	1336630	1654160	808937
804954*	Brake Assy Rear LH	1336640	1654170	808936

EAB 067367

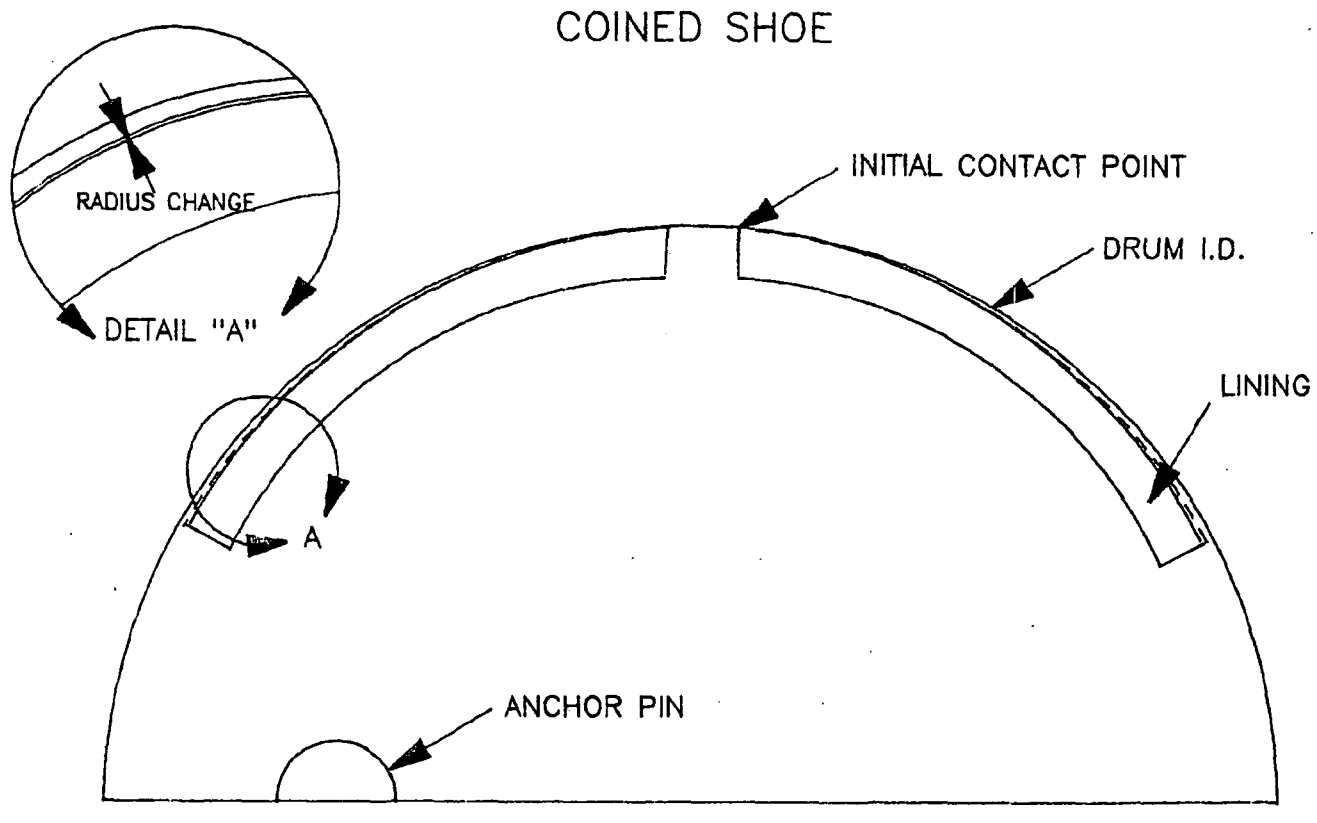

FIGURE 1

EAB 067368

In re: All Asbestos Litigation Filed by Simmons Cooper, Circuit Court, Third Judicial District, Madison Cty., IL; 11/17/05.

In re: All Asbestos Litigation Filed by Simmons Cooper, Circuit Court, Third Judicial District, Madison Cty., IL; 11/17/05.

GEOMETRY EFFECTS

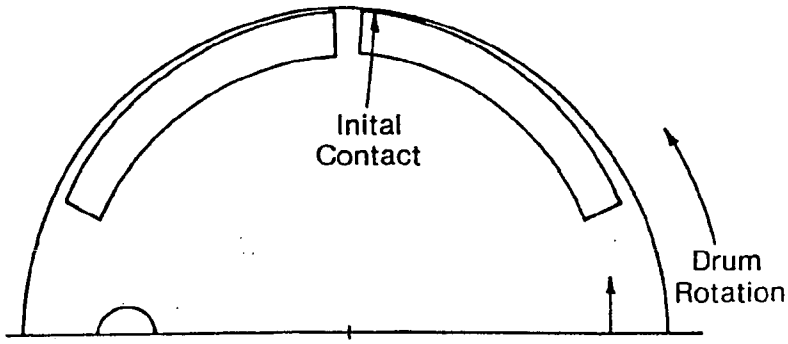

SUMMATION OF FRICTION FORCE

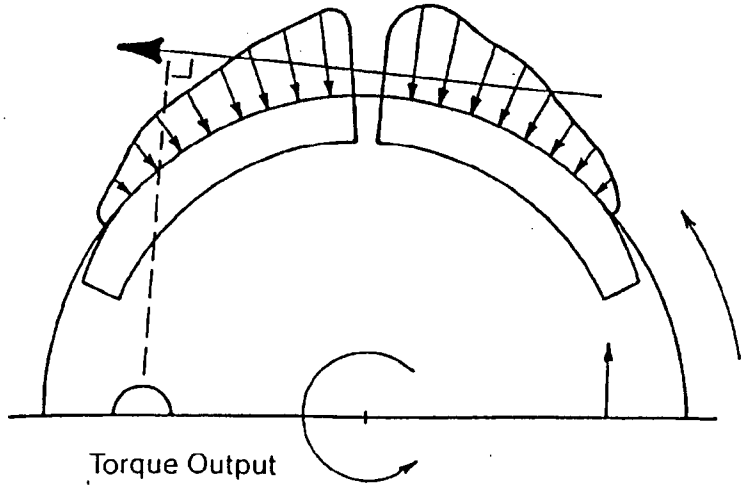

FIGURE 2

In re: All Asbestos Litigation Filed by Simmons Cooper, Circuit Court, Third Judicial District, Madison Cty., IL; 11/17/05.

In re: All Asbestos Litigation Filed by Simmons Cooper, Circuit Court, Third Judicial District, Madison Cty., IL; 11/17/05.

GEOMETRY EFFECT
ORIGINAL S.A.P. DESIGN

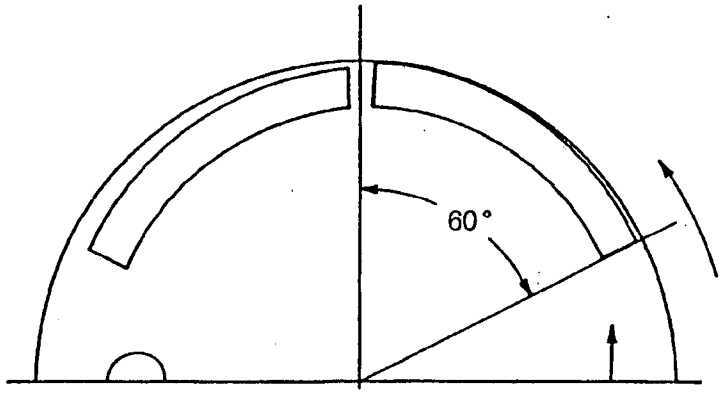

POTENTIAL INITIAL CONTACT RANGE FOR SAME TOLERANCING OF SHOE, SPIDER, DRUM, ETC.

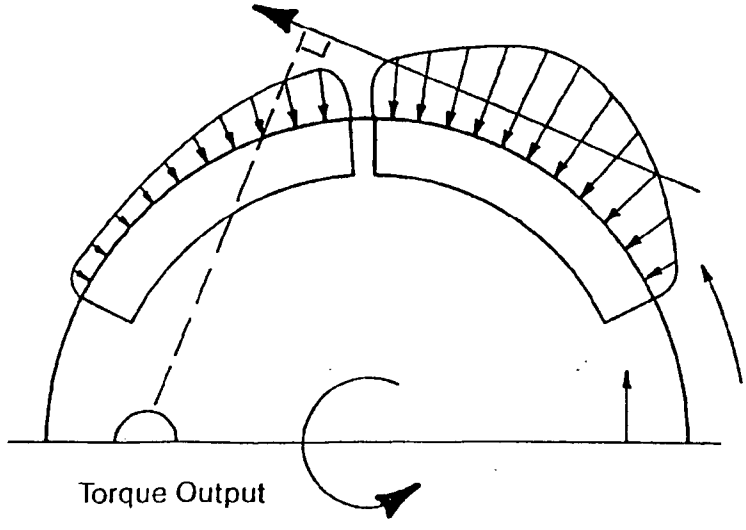

FIGURE 3

In re: All Asbestos Litigation Filed by Simmons Cooper, Circuit Court, Third Judicial District, Madison Cty., IL; 11/17/05.

In re: All Asbestos Litigation Filed by Simmons Cooper, Circuit Court, Third Judicial District, Madison Cty., IL; 11/17/05.

GEOMETRY EFFECT
COINED SHOE BRAKE

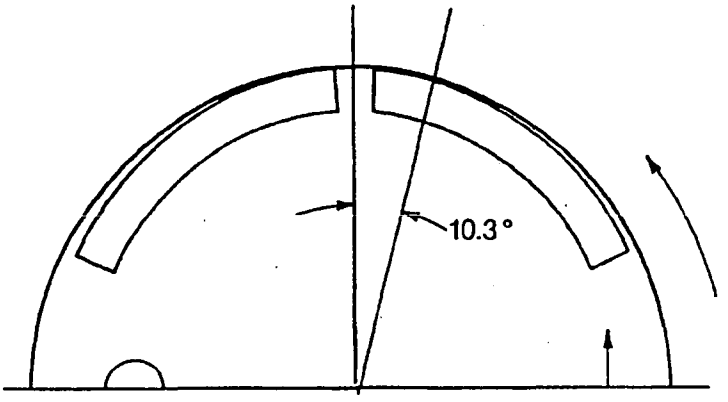

POTENTIAL INITIAL CONTACT RANGE FOR SAME TOLERANCING OF SHOE, SPIDER, DRUM, ETC.

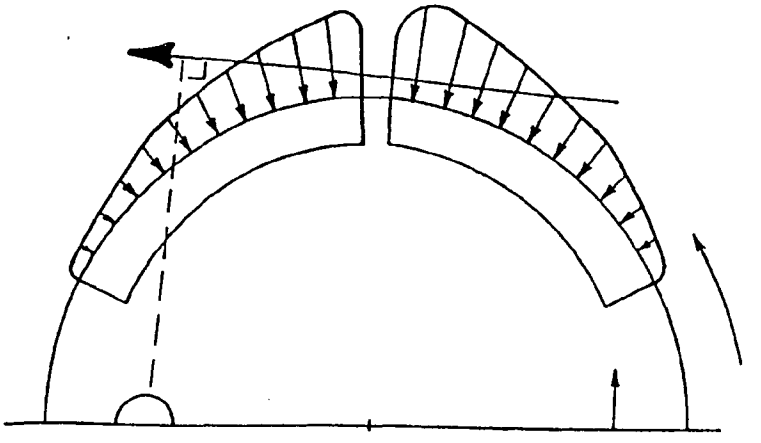

FIGURE 4

In re: All Asbestos Litigation Filed by Simmons Cooper, Circuit Court, Third Judicial District, Madison Cty., IL; 11/17/05.

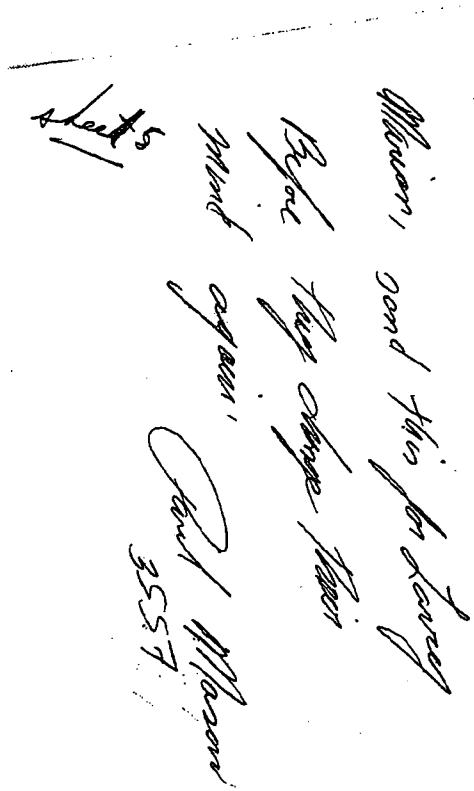

In re: All Asbestos Litigation Filed by Simmons Cooper, Circuit Court, Third Judicial District, Madison Cty., IL; 11/17/05.

EATON BRAKE TORQUE COMPARISON
ORIGINAL VS COINED DESIGN
VARIANCE WITHIN A THREE TEST SEQUENCE

BRAKE PRESSURE	ORIGINAL TEST# 2005	COINED TEST# 2611
20 PSI	9.15 %	9.00 %
30 PSI	10.66 %	5.77 %
40 PSI	11.50 %	1.91 %
50 PSI	13.73 %	8.79 %
60 PSI	15.33 %	6.13 %
70 PSI	16.41 %	3.18 %
80 PSI	18.34 %	2.11 %

FIGURE 5

EAB 067373

In re: All Asbestos Litigation Filed by Simmons Cooper, Circuit Court, Third Judicial District, Madison Cty., IL; 11/17/05.

EATON Quality 1st

HEMTT

aB
1/18/88

		Coined	Non-Asbestos	Total
	Material	—	2.30	
	D/L	.10	—	
	Burden	.86	—	
		.960	2.300	
	S & O	.011	.025	
	Scrap	.007	.016	
	Warr	.009	.023	
	Pres Prod	-0-	.259	
	M.V.	-0-	.039	
3.92%	D/L Var	.004	-0-	
(8.74)	Bur Var	(.009)	-0-	
	S & W Var	.062	-0-	
	Spec Adj	(.001)	(.002)	
	Sub-Total	1.043	2.660	
1395.0%	C-O-M Mfg	1.395	-0-	
15.6	G & A	.163	.415	
1.564	C-O-M G & A	.016	.042	
	Sub-Total	2.617	3.117	= 5.734
	Profit @12%	.314	.374	.688
	Total	2.93	3.49	6.42
			3.49	6.42

per brake

Form E30-1650 (10/84)

Printed in U.S.A.

EAB 067374

In re: All Asbestos Litigation Filed by Simmons Cooper, Circuit Court, Third Judicial District, Madison Cty., IL; 11/17/05.

In re: All Asbestos Litigation Filed by Simmons Cooper, Circuit Court, Third Judicial District, Madison Cty., IL; 11/17/05.

ENGINEERING CHANGE
AND/OR RELEASE NOTICE

EATON CORPORATION — ENG REL: 6936
AXLE & BRAKE DIVISION DEPT: MRKTG REQUESTOR: WRIGLEY SHEET 1 OF 1

PART #	REV	ITEM & DESCRIPTION OF CHANGE
		RELEASED
808933		EPL: KIT - 16.5 X 5 BRAKE COMPONENTS CUSTOMER: OSHKOSH MILITARY P/N 1654120
808934		EPL: 16.5 X 7 BRAKE ASSEMBLY - CCW CUSTOMER: OSHKOSH MILITARY P/N 1654140
808935		EPL: 16.5 X 7 BRAKE ASSEMBLY - CW CUSTOMER: OSHKOSH MILITARY P/N 1654150
808934/35		DWG: 16.5 X 7 BRAKE ASSEMBLY CCW (SHOWN) CW (OPPOSITE) 1.75 O/S, 11.560 C/L TO C/L, 55 DEG BRKT ANG CAM & DRUM (SAME) 0 DEG INDEX ANG MM-NAB10 LINING 5.5-6.0 LESS SLACK
808936		EPL: 16.5 X 7 BRAKE ASSEMBLY - CW CUSTOMER: OSHKOSH MILITARY P/N 1654170
808937		EPL: 16.5 X 7 BRAKE ASSEMBLY - CCW CUSTOMER: OSHKOSH MILITARY P/N 1654160
808936/37		DWG: 16.5 X 7 BRAKE ASSEMBLY CW (SHOWN) CCW (OPPOSITE) 1.75 O/S, 11.560 C/L TO C/L, 72 DEG BRKT ANG CAM & DRUM (OPPOSITE) 0 DEG INDEX ANG MM-NAB10 LINING 5.5-6.0 LESS SLACK

KLG

REASON FOR ACTION: CUSTOMER REQUEST
EFFECTIVE DATE: 22 DECEMBER 1987
EFFECT ON COMPLETED STOCK: N/A
EFFECT ON IN PROCESS STOCK: N/A
EFFECT ON VENDOR STOCK: N/A
EFFECT ON SERVICE: N/A
EFFECT ON TOOLING & GUAGING: N/A
AFFECTED CUSTOMER(S): OSHKOSH MILITARY
REMARKS:

DATE APPROVED: 1-3-88 APPROVED BY: [signature]

In re: All Asbestos Litigation Filed by Simmons Cooper, Circuit Court, Third Judicial District, Madison Cty., IL; 11/17/05.