GEN 55 REV. 2 (5/74)

nteroffice Memorandum

(Name and Location)	DATE
As Listed	12-13-79
(Name and Location) M. R. Stenzel	REFERENCE NO. MRS-158-79

SUBJECT: GLOVE PERMEATION BY ORGANIC SOLVENTS

For your information, I have attached an article titled "Glove Permeation by Organic Solvents". The gloves were classified for evaluation by physical characteristics rather than by brand name. I feel this characterization will enhance the usefulness of the publication.

Mark Stenzel
M. R. Stenzel

Attachment

BAY CITY
D. G. Bremer
C. W. Whaley

BISHOP
G. Ille
J. Sternadel

CCCTC
J. P. Hawthorne
R. F. Stubbeman

CLEAR LAKE
J. R. Laird
G. R. Osborne

DALLAS
C. D. Barrett
J. K. Stafford - 3
G. A. Vos

PAMPA
L. D. Godfrey
J. D. Wilson

000488

PLAINTIFF'S EXHIBIT
tabbies
CEL-305

Technical Information Department
LAWRENCE LIVERMORE LABORATORY
University of California | Livermore, California | 94550

PREPRINT UCRL- 81766

Lawrence Livermore Laboratory

Glove Permeation By Organic Solvents

G. O. Nelson, B. Y. Lum, G. J. Carlson, and J. S. Johnson

September 25, 1979

This paper was prepared for submittal to the American Industrial Hygiene Association Journal.

This is a preprint of a paper intended for publication in a journal or proceedings. Since changes may be made before publication, this preprint is made available with the understanding that it will not be cited or reproduced without the permission of the author.



000489

We have tested and measured the vapor penetration of 29 common laboratory solvents on 28 protective gloves using gas-phase, infrared spectrophotometric techniques to determine the permeation characteristics. Five different types of permeation behavior were identified. No one glove offered complete protection against all the solvents tested. The permeation rate of the solvent was found to be indirectly proportional to glove thickness. Of two solvent mixtures tested, one exhibited a large, positive, synergistic rate.

Glove permeation by organic solvents*

G. O. NELSON, B. Y. LUM, G. J. CARLSON and J. S. JOHNSON

Lawrence Livermore Laboratory, University of California, Livermore, California 94550

introduction

For many years, occupationally induced skin disease (dermatitis) has been recognized by the industrial hygiene profession as a significant problem in the workplace. When handling potentially hazardous materials, the industrial hygienist has relied on gloves of various materials without knowing whether the glove will effectively protect the skin. Therefore, selecting gloves for specific tasks is usually a trial and error process. If pain or dermatitis develops or the glove dissolves, a different glove is substituted. This process must be repeated until a satisfactory glove is found.

---

*This work was performed under the auspices of the U.S. Department of Energy under contract No. W-7405-Eng-48.

000490

Attempts to calculate a glove's effectiveness from known basic principles are hampered by either lack of fundamental permeation data or large errors occurring because of unknown interaction between a solvent and glove membrane. Also, many gloves are bonded in layers or to inner liners, compounding the calculational problem. The best method of ensuring personnel safety is to measure, experimentally, the permeation rate of the solvents on the glove.

Recent studies have shown that solvent vapors penetrate many types of glove materials.[1,2] In addition, since many solvents are used as a diluent for carcinogens, it is absolutely essential to determine which gloves offer the best protection.

The purpose of this project was to identify the permeation characteristics of gloves used at the Lawrence Livermore Laboratory. Using gas-phase, infrared spectrophotometric techniques, we conducted a series of experiments to measure, dynamically, the vapor penetration of 29 different solvents on 28 various types of gloves. By knowing a glove's permeation breakthrough and solvent contact times, and the manual dexterity requirements of the task, specific task assignments can be safely made.

theoretical considerations

Gas permeation through polymeric materials is basically a diffusion process that occurs because of the concentration gradients between the inner and outer surface. The quantity of gas, q, diffusing through a membrane is based on Fick's law, and can be calculated[3] using the equation

$$q = \frac{A}{x} (P_1 - P_o) P_o e^{-E/RT}$$

where

q = permeation rate (cm^3/min)

A = area of membrane (cm^2)

x = membrane thickness (cm)

p_1 = solvent vapor pressure on the outer glove surface (Pa)

p_o = solvent vapor pressure on the inner glove surface (Pa)

P_o = permeation constant (cm^3/sec − cm^2Pa/cm)

E = activation energy required to move molecules through membrane (cal/mole)

R = gas constant (2.0 cal/mole − K)

T = temperature (K).

Although the equation appears relatively simple, its solution is difficult primarily because we have no method for computing the activation rate or permeation constant.

We can determine the solvent temperature, membrane area, and glove thickness by direct measurement. If one assumes that the diffusing material is removed completely as it diffuses through the membrane, then $p_o \rightarrow 0$. The vapor pressure, p_1, is generally assumed to be that which occurs at saturation and, from previous studies, has been shown to hold even for a liquid in direct contact with the glove.[4]

The activation energy can only be determined experimentally using an Arrhenius-type equation[5] that states

$$\log (q_1/q_2) = (E/2.303R) (T_1 - 1/T_2) ,$$

where q_1 and q_2 are the permeation rates at temperatures T_1 and T_2, respectively.

The permeation constant, P_o, cannot be theoretically evaluated with any consistent accuracy; it is a complex function of the temperature, gas characteristics (diffusion), and

membrane properties (solubility) and generally considered to be pressure-dependent.[6,7] The problem of evaluating P_o is further compounded if the solvent distorts (swells, shrinks, discolors) the membrane with time.

A recent study conducted by Coletta et al[8] addressed the possibility of theoretically predicting glove behavior. Their findings, however, indicated that "such modelling appears to be impractical at this time."

experimental

background

Several systems for measuring solvent permeation have been proposed. Although consistent results have previously been achieved using a liquid or a vapor on the exterior surface of the glove,[9] the problem of what medium to use on the glove's interior is open to much discussion. Weeks and Dean[1] feel that the most meaningful results can be obtained using a saline solution to simulate the perspiration on the hand inside a glove. Sansone and Tewari[2] postulate that an emulsion of fats and water would simulate the sebum normally secreted by the human skin. Because this approach would lead to major analytical difficulties, they substituted distilled water instead.

With our system a different approach is used. If we assume that the medium on the inner surface of the glove is air, and if the air stream is moving, the air will carry away permeating material as fast as it penetrates the glove material. We can then maximize the diffusion process by maintaining the maximum concentration gradient across the glove material. Penetrating solvent vapors are not allowed to build up on the interior of the glove or on available permeation sites filled by the saline, water, or sebum. In addition, the problem of analyzing the gas is simplified when mixtures are treated for analysis. Using this

technique we can measure the maximum permeation possible and monitor its progress as a function of time.

apparatus

A schematic of the permeation measurement system is shown in Figure 1. A cross section and an exploded view of the permeation cell is shown in Figure 2. The internal dimensions of the lower half of the cell are 34 mm I.D. and 50 mm deep; the dimensions of the top cap are 34 mm I.D. and 22 mm deep.

For our experiment, a 5.4-cm sample was cut from either the palm or the back of the glove using a "cookie cutter" type punch. The sample was weighed and the thickness measured in three places to ensure surface uniformity. The test sample was then placed over the "O" ring on the base assembly and the top cap and pressure plate placed on top and held with three washers and hex nuts tightened to 15 in./lb. We used a torque wrench to ensure uniform tightening, because uneven plate pressure yielded inconsistent results.

The permeation cell was placed in the system, as shown in Figure 1, and 10 ml of the test solvent added. The flow-temperature-humidity control system[10] keeps the purified air flowing through the cell at a constant rate (25 L/min), temperature (25°C), and relative humidity (50%). An overflow trap was placed behind the cell to trap any liquid in case the membrane was destroyed by the solvent. The airborne vapors are passed through a Wilks Miran 1A infrared gas analyzer to measure concentration. The analytical wavelength we chose matched the strongest adsorption band of the solvent undergoing test. A strip-chart recorder monitored the progress of the permeation as a function of time; sixty minutes was arbitrarily chosen as the test time.

The permeation rate of a two-component solvent mixture was also measured using the test apparatus shown in Figure 1. However, to obtain the gas concentrations of each component simultaneously, two infrared gas analyzers were used.

results and discussion

glove-permeation tests

The physical characteristics of the 28 gloves tested are summarized in Table 1. The weight and thickness values include any floc or fabric liner that might be present. Figure 3 shows the five types of permeation behavior observed. Type A, the most typical, occurs when the specimen remains physically unchanged during the test. The glove offers complete protection until initial breakthrough is observed at point I. The permeation rate continues to increase in the characteristic "S" shaped curve until a maximum rate, point m, is obtained. The rate then stabilizes at this equilibrium value.

Type B behavior is essentially the same as type A except that after point m is reached, the permeation rate slowly increases or decreases. This phenomena occurs when the sample is structurally modified by the solvent, either by chemical reaction or some physical deformation.

Type C behavior occurs when the glove exhibits a catastrophic breakthrough. The glove behaves normally until point X is reached, at which time a full-scale analyzer response is observed as the sample dissolves, admitting the entire volume of test solvent into the overflow trap.

Type D response happens when the maximum permeation rate is normally achieved; the rate decreases sharply and attains an equilibrium value at point y. This type of behavior occurs when there is moderate to heavy swelling of the glove, although the rate eventually stabilizes at a time near point y.

The double "S" shape of type E shows an inflection at point z that occurs when the sample undergoes a high degree of swelling. Although a similar pattern was observed by Weeks and Dean,[1] no satisfactory explanation has been postulated.

Table 2 lists the two key values noted from our permeation experiments: the time until initial breakthrough, observed at point I, and the maximum permeation rate, occurring at point m. All gloves exhibited type A behavior except where noted. From the data shown in these tables, no one glove offers total protection from all solvents.

effect of glove thickness on permeation rate

Four glove/solvent permeation tests were conducted on gloves of various thicknesses. Only glove samples from a single source were tested with each solvent. Extra large thicknesses were obtained using multiple sample layers. The results are shown in Figure 4. All four tests showed the permeation rate to be inversely proportional to glove thickness. In other words, if the thickness is doubled, the permeation rate is reduced by half.

effect of solvent concentration

The results of simultaneously measuring the permeation rate of the two-component solvent mixtures are shown in Figures 5 and 6. In Figure 5, a mixture of chloroform and toluene was tested on a neoprene glove (No. 15). The dashed line showing the sum of the permeation rates for each component indicates that only minimal synergistic effects occur; if individual permeation rates are known, the total permeation rate of the mixture will be directly proportional to the volumetric concentration of each solvent. This observation is surprising because the neoprene sample is extremely swollen during the test period.

Figure 6 shows the effects of a pentane/trichloroethylene mixture on a polyethylene glove (No. 2). Although the glove sample remained essentially unaffected during the test, a large positive synergism (shown by the dashed line) was noticed as a 50:50 mixture was reached. As a result, the permeation rates of the mixtures cannot be accurately predicted if the rate of only one component is known.

summary

Because there are no valid data for solvent activation energies and permeation constants, glove-permeation rates can only be obtained experimentally. From these experiments, five permeation breakthrough types were identified. Of the 28 gloves tested, none was found to be a satisfactory deterrent against all the solvents tested. The solvent-permeation rate was found to be indirectly proportional to glove thickness. We also noted that solvent mixtures can exhibit large, positive, synergistic rates.

references

1. Weeks, R. W. and B. J. Dean: Permeation of Methanolic Aromatic Amine Solutions Through Commercially Available Glove Materials. Am. Ind. Hyg. Assn. J. 38:721 (1977).
2. Sansone, E. B., and Y. B. Tewari: The Permeability of Laboratory Gloves to Selected Solvents. Am. Ind. Hyg. Assn. J. 39:169 (1978).
3. Lucero, D. P.: Performance Characteristics of Permeation Tubes. Anal. Chem 43: 1744 (1977).
4. Mueller, W. J.: Permeability of Rubber to Organic Liquids. Rubber Age 81:982 (1957).
5. Saltzman, B. E., W. R. Burg and G. Ramaswamy: Performance of Permeation Tubes as Standard Gas Sources. Environ. Sci. and Tech. 5:1121 (1971).
6. Stern, S. A., J. T. Mullhaupt and P. J. Gareis: The Effect of Pressure on the Permeation of Gases and Vapors Through Polyethylene. Am. Inst. Chem. Eng. J. 15:64 (1969).
7. Li, N. N. and R. B. Long: Permeation Through Plastic Films. Am. Inst. Chem. Eng. J. 15:73 (1969).
8. Coletta, G. C., A. D. Schwope, I. J. Arons, J. W. King and A. Sivak: Development of Performance Criteria for Protective Clothing Used Against Carcinogenic Liquids. DHEW (NIOSH) Publication No. 79-106 (Oct. 1978).
9. Stannett, Y. and H. Yasuda: Liquid Versus Vapor Permeation Through Polymer Films. J. Poly. Sci. 1:289 (1963).
10. Nelson, G. O. and R. D. Taylor: Flow-Temperature-Humidity Control System Operating Manual. Report No. UCID-17961. Lawrence Livermore Laboratory, Livermore, California (1978).

NOTICE

"This report was prepared as an account of work sponsored by the United States Government. Neither the United States nor the United States Department of Energy, nor any of their employees, nor any of their contractors, subcontractors, or their employees, makes any warranty, express or implied, or assumes any legal liability or responsibility for the accuracy, completeness or usefulness of any information, apparatus, product or process disclosed, or represents that its use would not infringe privately-owned rights."

SJ

000499

TABLE I

Physical Characteristics of Glove Samples

Glove No.	Average Thickness (mm)	Average[a] Weight (g)	Glove Composition	No. of Layers	Interior Liner
01	0.030 ± 0.005	0.07 ± 0.01	Polyethylene	1	none
02	0.076 ± 0.005	0.17 ± 0.03	Polyethylene	1	none
03	0.12 ± 0.02	0.34 ± 0.06	Polyvinyl chloride	1	none
04	0.13 ± 0.02	0.39 ± 0.07	Polyvinyl chloride	1	none
05	0.31 ± 0.04	0.91 ± 0.13	Polyvinyl chloride	1	none
06	0.20 ± 0.05	0.58 ± 0.19	Polyvinyl chloride	1	none
07	0.11 ± 0.02	0.31 ± 0.04	Vinyl	1	none
08	0.13 ± 0.02	0.35 ± 0.08	Vinyl	1	none
09	0.15 ± 0.03	0.44 ± 0.12	Vinyl	1	none
10	0.21 ± 0.01	0.51 ± 0.03	Latex	1	none
11	0.31 ± 0.02	0.76 ± 0.02	Latex	1	none
12	0.47 ± 0.05	1.15 ± 0.10	Latex	1	none
13	0.45 ± 0.04	1.12 ± 0.11	Latex/Neoprene	blend	floc
14	0.52 ± 0.14	1.37 ± 0.16	Latex	1	floc

TABLE I (continued)

Physical Characteristics of Glove Samples

Glove No.	Average Thickness (mm)	Average[a] Weight (g)	Glove Composition	No. of Layers	Interior Liner
15	0.29 ± 0.04	1.13 ± 0.12	Neoprene	2	none
16	0.47 ± 0.05	1.59 ± 0.42	Neoprene	1	none
17	0.46 ± 0.11	1.72 ± 0.43	Neoprene	2	none
18	0.77 ± 0.18	1.73 ± 0.55	Neoprene	1	fabric
19	0.70 ± 0.07	2.36 ± 0.05	Neoprene	2	none
20	0.70 ± 0.05	1.41 ± 0.05	Neoprene	1	fabric
21	0.80 ± 0.03	2.59 ± 0.26	Neoprene	1	none
22	0.35 ± 0.02	0.89 ± 0.03	Buna-N	1	none
23	0.37 ± 0.07	0.92 ± 0.03	Buna-N	1	floc
24	0.55 ± 0.06	1.40 ± 0.18	Buna-N	1	none
25	0.32 ± 0.11	0.97 ± 0.18	Acrylonitrile	1	none
26	0.45 ± 0.02	1.07 ± 0.04	Natural Rubber	1	none
27	0.59 ± 0.07	1.48 ± 0.26	Natural Rubber	1	floc
28	0.31 ± 0.02	0.75 ± 0.04	Nitrile Rubber	1	none

[a] 22.9 cm^2 sample.

TABLE II

Solvent Breakthrough Times and Permeation Rates for Protective Gloves[A]

Solvent	Glove Number													
	01	02	03	04	05	06	07	08	09	10	11	12	13	14
Acetone	>60	4.0	C	–	C	C	–	–	C	2.2	5.2	6.0	5.0	8.0
	(<30)	(2)	(C)	–	(C)	(C)	–	–	(C)	(210)	(110)	(82)	(100)	(46)
Aniline	>60	3.0	3.0	–	18	9.0	–	–	–	>60	>60	–	–	5.2
	(<40)	–	(180)	–	(160)	(160)	–	–	–	(<40)	(<40)	–	–	(15)
Benzene*	0.1	4.0	0.5[B]	0.4[D]	2.2	2.2[B]	0.1[D]	0.3[D]	0.1[D]	1.5	2.2	3.0	3.0	5.2
	(0.25)	(0.05)	(3.5)[B]	(4.1)[D]	(1.5)	(1.6)[B]	(4.7)[B]	(3.6)[D]	(4.9)[D]	(5.6)	(3.2)	(2.6)	(2.8)	(2.0)
Butyl acetate	2.0	12	10[D]	1.0	2.4[D]	2.0[D]	0.5[C]	1.5[D]	1.5[D]	2.0	4.0	6.4	6.4	9.2
	(20)	(6)	(6000)[D]	(6900)	(3300)[B]	(4300)[D]	(C)	(6400)[D]	(4100)	(2900)	(1400)	(940)	(640)	(640)
Carbon tetrachloride*	1.5	8.0	0.8[D]	1.5[D]	8.4[B]	2.3[B]	1.2[D]	1.0[D]	1.2[D]	1.5	3.8	5.0	4.0	10
	(0.5)	(0.08)	(1.0)[D]	(2.0)[D]	(0.6)[B]	(0.8)[B]	(2.1)[D]	(2.5)[D]	(2.0)[D]	(6.0)	(1.6)	(5.1)	(4.6)	(3.1)
Chloroform*	0.6	2.8	0.4[D]	0.4[D]	0.4[D]	0.8[D]	0.4[D]	0.7[D]	0.6[D]	0.8	1.6	2.6	2.8	6.4
	(1.6)	(1.0)	(15)[D]	(27)[D]	(5.4)[D]	(11)[D]	(15)[D]	(12)[D]	(13)[D]	(15)	(4)	(7.6)	(7.0)	(4.4)
m-Cresol	>60	>60	12	14	>60	14	8	7.5	7.0	14	36	30	30	>60
	(<1)	(<1)	(67)	(59)	(<1)	(63)	(44)	(55)	(56)	(15)	–	(2)	(2)	(<1)
Cyclohexane	1.6	10	1.6	2.2[D]	16	5.6	2.0[D]	0.8[D]	2.4	1.7	–	8.0	5.0	–
	(100)	(28)	(500)	(340)[D]	(100)	(200)	(310)[D]	(450)[D]	(300)	(1500)	(10)	(1300)	(1400)	–
Dimethyl sulfoxide	>60	–	3.2	–	42	34	–	–	–	>60	>60	–	–	–
	(<10)	–	(380)	–	(300)	(320)	–	–	–	(<10)	(<10)	–	–	–
Dioxane	1.2	10	1.6[D]	0.8[D]	6.4[B]	3.3[B]	1.0[D]	1.2[D]	1.1[D]	2.4	8.8	12	17	18
	(300)	(60)	(3700)[D]	(4000)[D]	(1500)[B]	(1100)[B]	(5000)[D]	(3800)[D]	(4000)[D]	(800)	(420)	(340)	(340)	(220)
Ethanol	–	>60	3.0	5.0	20	11	3.5	3.2	2.0	12	28	>60	–	>60
	–	(<4)	(43)	(37)	(28)	(43)	(28)	(34)	(57)	(14)	(4)	(<4)	–	(<4)
Ethylene dichloride*	1.0	5.2	0.6[D]	0.8[D]	2.0[D]	1.0[D]	0.4[C]	0.6[D]	0.8[D]	1.2	0.4	4.6	4.8	0.4
	(0.01)	(0.01)	(11)[D]	(9.7)[D]	(4.5)[D]	(6.9)[D]	(C)	(13)	(7.8)[D]	(3.1)	(1.6)	(1.3)	(1.3)	(1.3)
Ethylene glycol	>60	>60	>60	>60	>60	>60	>60	>60	>60	>60	>60	>60	>60	>60
	(<10)	(<10)	(<10)	–	(<10)	(<10)	(<10)	(<10)	(<10)	(<10)	(<10)	(<10)	(<10)	(<10)
Freon TF	4.8	>60	2.4	5.2	11	7.6[D]	2.4[B]	2.5[B]	2.8	2.2	8.8	17	16	16
	(10)	(<10)	(3400)	(2200)	(190)	(240)[D]	(2600)[B]	(3000)[B]	(1900)[B]	(3000)	(1000)	(820)	(700)	(790)
Isoamyl acetate	2.0	>60	1.0	1.0	4.8	2.0[B]	1.0	1.0	2.0[B]	2.0	5.6	9.6	9.6	12
	(20)	(<10)	(3300)	(3300)	(1600)	(2500)[B]	(C)	(4500)	(2100)[B]	(1900)	(1100)	(790)	(760)	(730)[B]

000502

TABLE II (continued)

Solvent Breakthrough Times and Permeation Rates for Protective Gloves[A]

Solvent	Glove Number													
	01	02	03	04	05	06	07	08	09	10	11	12	13	14
Methanol	>60	>60	1.5[B]	2.0[B]	2.8[B]	3.0[B]	1.5[B]	1.0[B]	2.2	2.0	20.0	>60	-	24
	(<4)	(<4)	(36)[B]	(34)[B]	(18)[B]	(23)[B]	(34)[B]	(38)[B]	(30)	(18)	(8)	(<4)	-	(4)
Methyl ethylketone	>1.0	9.6	C	-	C	C	-	-	C	1.2	2.4	7.2	5.6	9.2
	(10)	(<3)	C	-	C	C	-	-	C	(800)	(600)	(320)	(310)	(230)
Methyl iodide*	0.7	2.4	C	-	C	C	-	-	C	1.5	1.5	2.8	2.0	5.6
	(1.1)	(0.3)	C	-	C	C	-	-	C	(21)	(13)	(8.1)	(8.9)	(5.3)
Methylene chloride*	0.4	2.0	0.4	0.4[D]	1.2[D]	0.72[D]	0.4[D]	0.4[D]	0.4[D]	0.8	1.3	3.0	2.7	4.2
	(0.3)	(0.1)	C	(17)[D]	(12)[D]	(17)[D]	(77)[D]	(29)[D]	(24)[D]	(13)	(8.2)	(4.3)	(4.6)	(3.4)
Pentane	0.4	3.2	0.8[E]	0.8[E]	9.2	2.4[D]	0.8[E]	0.8[E]	0.9[E]	0.7	1.7	3.6	4.0	1.6
	(400)	(70)	(1100)[E]	(810)[E]	(100)	(250)[D]	(720)[E]	(1600)[E]	(1600)[E]	(5700)	(2700)	(1800)	(1800)	(2300)
Phenol	>60	>60	3.2[B]	8.0	32	15[B]	6.0[B]	6.2	3.8	16	>60	>100	>60	>60
	(<3)	(3)	(190)[B]	(120)	(77)	(100)[B]	(130)[B]	(120)	(120)	(15)	(<3)	(<3)	(<3)	(<3)
Pyridine*	>60	>60	C	-	C	C	C	C	C	1.6[B]	2.4	7.6	8.4	13.6
	(<0.1)	(<0.01)	C	-	C	C	C	C	C	(1.2)	(0.7)	(0.4)	(0.4)	(0.3)
Tetrachloroethane*	4.4	>60	1.0[D]	1.2[D]	6.1[B]	2.1[D]	0.7[C]	1.2[D]	1.9[B]	2.0	6.4	5.6	9.2	18.4
	(0.01)	(<0.002)	(5.4)[D]	(6.0)[D]	(2.5)[B]	(4.0)[D]	C	(4.1)[D]	(3.1)[D]	(5.6)[B]	(2.6)	(2.9)	(3.2)	(1.4)
Tetrahydrofuran*	0.8	3.2	0.4[C]	0.4[C]	2.0[C]	1.2[C]	0.4[C]	0.4[C]	C	1.1	2.4	3.6	3.6	1.2
	(0.2)	(0.004)	C	C	C	C	C	C	C	(34)	(25)	(21)	(23)	(21)
Toluene*	0.5[D]	2.0	0.2[B]	0.2[D]	2.9[B]	3.3[B]	0.2[D]	0.2[D]	0.3[D]	0.5	2.0	3.5	-	5.0
	(2.2)[D]	(0.6)	(8.8)[D]	(5.1)[D]	(2.1)[B]	(1.8)[B]	(5.3)[D]	(5.9)[D]	(4.8)[D]	(9.2)	(4.7)	(2.7)	-	(3.8)
1,1,1-Trichloroethane*	2.0	1.2	C	-	C	C	0.8[D]	0.7[D]	C	1.5	3.7	7.0	8.0	10.0
	(0.13)	(0.03)	C	-	C	C	(3.2)[D]	(4.0)[D]	C	(5.7)	(2.6)	(3.1)	(3.0)	(2.4)
Trichloroethylene*	0.4	2.2	0.6[D]	0.8[D]	3.1[D]	0.8[D]	0.7[D]	0.4[D]	0.8[D]	0.8	1.6	2.8	2.8	4.6
	(1.5)	(0.4)	(11)[D]	(9)[D]	(3.8)[D]	(8.2)[D]	(13)[D]	(13)[D]	(6.2)[D]	(26)	(9.4)	(7.6)	(7.3)	(5.9)
Trifluoroethanol	>60	>60	4.8[E]	7.1[E]	15	6.8[E]	2.6[E]	4.0[E]	2.8[E]	>66	>60	>80	>99	>61
	(<4)	(<4)	(1200)[E]	(1900)[E]	(1300)	(1100)[E]	(1000)[E]	(300)[E]	(900)[E]	(<4)	(<4)	(<4)	(<4)	(<4)
Xylene*	-	4.0	1.5[D]	1.0[D]	-	4.6[B]	0.5[D]	0.6[D]	1.6[D]	1.0	2.5	4.8	-	7.0
	-	(0.1)	(3.0)[D]	(3.5)[D]	-	(1.7)[B]	(4.5)[D]	(3.5)[D]	(2.1)[D]	(5.8)	(3.4)	(3.7)	-	(2.5)

000503

TABLE II (continued)

Solvent Breakthrough Times and Permeation Rates for Protective Gloves[A]

Solvent	Glove Number													
	15	16	17	18	19	20	21	22	23	24	25	26	27	28
Acetone	16	19	33	2 5	32	2 2	57	5.2	5.0	13	3.0	15	27	4 0
	(140)	(140)	(90)	(180)	(170)	(310)	(86)	(2000)	(<800)	(<800)	(1500)	(66)	(45)	(800)
Aniline	>60	>60	>60	-		>60	–	96	-	–	18	>60	>60	-
	(<40)	(<40)	(<40)	–	-	(<40)	–	(120)	–	–	(180)	(<40)	(<40)	
Benzene*	4.8	11 1	16	1 2	16	24	-	63	19	46	4.4	3.7	7 4	9.0
	(1 8)	(1 0)	(0.8)	(0 95)	(1.1)	(0.3)	–	(0.4)	(0.85)	(0.51)	(1.3)	(2 2)	(1.6)	(1.1)
Butyl	11	29	>60	5 2	52	3.6	>60	33	40	58	20	8.0	14	–
acetate	(830)	(320)	(<21)	(220)	(320)	(320)	(<21)	(480)	(450)	(250)	(350)	(880)	(510)	–
Carbon	13	34	23	30	41	4 6	>60	>60	>60	12 8	>60	30	11	>60
tetrachloride*	(0 8)	(0 8)	(0 9)	(0 1)	(0.9)	(0.5)	(<0.006)	(<0 006)	(<0 006)	(<0.006)	(<0 006)	(0.8)	(1.6)	(<0.006)
Chloroform*	3.6	9 6	10	1.2	13 6	0 7	21.6	4 8	2.4	12.8	4.4	3 2	2.8	
	(4 4)	(3.2)	(2 5)	(2.7)	(2 8)	(6.8)	(2.0)	(9.4)	(9.9)	(5.6)	(7.0)	(5.6)	(7.0)	-
m Cresol	>60	>60	>60	>60	>60	–	>60	>60	>60	>60	>60	>60	>60	-
	(<1)	(<1)	(<1)	(<1)	(<1)	-	(<1)	(<1)	(<1)	(<1)	(<1)	(<1)	(<1)	–
Cyclohexane	72	>60	29	-	-	9.6	–	>60	>60	>60	>60	9.6	18	>60
	(100)	(<10)	(100)	-	-	(70)	–	(<10)	(<1)	(<1)	(<10)	(1100)	(800)	(<1)
Dimethyl	>60	>60	60		-	>60	-	>60	-	-	28	>60	>60	-
sulfoxide	(<10)	(<10)	(<10)	-	–	(<10)	–	(<10)	–	–	(350)	(<10)	(<10)	–
Dioxane	15	44	28	8 4	44	5 2	107	25	27	63	17	10	27	–
	(550)	(300)	(370)	(220)	(240)	(330)	(150)	(860)	(820)	(3)	(710)	(280)	(150)	-
Ethanol	>60	>60	>60	>60	>60	>60	>60	>60	>60	>60	>60	>60	>60	–
	(<4)	(<4)	(<4)	(<4)	(<4)	(<4)	(<4)	(<4)	(<4)	(<4)	(<4)	(<4)	(<4)	-
Ethylene	3 6	16	8 6	1 6	28	2.4	42	6.4	7.1	17	4.9	3.6	9 7	–
dichloride*	(1 8)	(0 7)	(1 0)	(0.7)	(0.8)	(0.8)	(0.5)	(3.8)	(3.9)	(2.6)	(3.9)	(2.5)	(0 8)	–
Ethylene	>60	>60	>60	>60	>60	-	>60	>60	>60	>60	>60	>60	>60	–
glycol	(<10)	(<10)	(<10)	(<10)	(<10)	–	(<10)	(<10)	(<10)	(<10)	(<10)	(<10)	(<10)	–
Freon TF	>60	>60	>60	>60	>60	180	>60	>60	>60	>60	>60	16	29	–
	(<10)	(<10)	(<10)	(<10)	(<10)	(20)	(<10)	(<10)	(<10)	(<10)	(<10)	(700)	(590)	–
Isoamyl	16	30[B]	30[B]	12[B]	–	5.6	>60	>60	65	>60	42	10	19[B]	–
acetate	(540)	(350)[B]	(310)[B]	(140)[B]	–	(120)	–	–	(63)	–	(130)	(660)	(470)[B]	–

000504

TABLE II (continued)

Solvent Breakthrough Times and Permeation Rates for Protective Gloves[A]

Solvent	Glove Number													
	15	16	17	18	19	20	21	22	23	24	25	26	27	28
Methanol	>60	>60	>60	17.6	>60	23	>60	69	54	>60	39	18	>60	–
	(<4)	(<4)	(<4)	(6)	(<4)	(5)	(<4)	(23)	(36)	(<4)	(29)	(4)	(<4)	–
Methyl ethylketone	4.0	8.0	10	17	27	2.4	39	6.4	6.0	12	9.6	8.0	16	3.6
	(900)	(600)	(600)	(200)	(330)	(500)	(230)	(3100)	(2200)	(1900)	(1500)	(400)	(200)	(2800)
Methyl iodide*	2.2	4.4	4.4	15	12	0.7	17	0.4	5.6	8.0	1.5	2.2	3.7	–
	(7.9)	(6.3)	(5.6)	(1.4)	(1.7)	(4.6)	(2.9)	(6.6)	(6.0)	(8.0)	(11)	(9.2)	(6.9)	(8.2)
Methylene chloride*	2.0	4.4	6.1	8.0	9.0	0.8	13	2.6	2.4	6.6	1.5	2.0	3.2	–
	(4.8)	(3.5)	(2.8)	(1.1)	(2.6)	(2.8)	(2.0)	(12)	(13)	(8.2)	(1.9)	(4.6)	(3.8)	–
Pentane	20	65	38	6.4	>60	6.8	>60	>60	>60	>60	5.6[D]	3.5	5.2	–
	(21)	(10)	(16)	(25)	(<2)	(24)	(<2)	(<2)	(<2)	(<2)	(10)[D]	(1800)	(1600)	–
Phenol	>60	>60	>60	>99	>60	–	>60	56	32	>60	36	>60	>60	–
	(<3)	(<3)	(<3)	(<3)	(<3)	–	(<3)	(300)	(300)	(<3)	(>250)	(<3)	(<3)	–
Pyridine*	4.0	20	26	39	38	1.6	51	11	9.6	15	10	12	26	5.6
	(1.7)	(0.9)	(0.7)	(0.2)	(0.6)	(0.7)	(0.4)	(3.2)	(3.5)	(3.0)	(2.4)	(0.5)	(0.3)	(4.0)
Tetrachloroethane*	9.6	32	18	6.0	50	3.2	>64	22	13	74	19[B]	10[B]	21	–
	(2.2)	(1.1)	(1.4)	(0.5)	(1.0)	(0.6)	(<0.02)	(3.2)	(3.1)	(>0.3)	(2.2)[B]	(1.4)[B]	(1.3)	–
Tetrahydrofuran*	2.7	5.2	4.8	1.6	14	1.3	20	6.2	4.7	6.0	2.6	2.6	6.7[B]	–
	(23)	(16)	(14)	(8.0)	(11)	(9.6)	(9.0)	(3.7)	(4.3)	(2.7)	(3.5)	(3.5)[B]	(2.4)[B]	–
Toluene*	4.0	14	17	2.0	26	1.0	32	19	16	>60	10	3.0	4.1	–
	(2.5)	(1.4)	(0.9)	(1.0)	(1.3)	(2.6)	(0.7)	(0.7)	(0.5)	(<0.3)	(0.8)	(3.6)	(2.8)	(0.4)
1,1,1-Trichloroethane*	16	19	25	4.0	48	2.2	–	11	56	>60	3.7	7.4	13	16
	(1.0)	(1.0)	(0.9)	(1.0)	(0.8)	(0.7)	–	(4.1)	(<0.05)	(<0.01)	(2.6)	(1.8)	(1.2)	–
Trichloroethylene*	3.3	8.1	12	1.6	15	1.6	23	9.2	9.6	26	7.5	2.8[E]	4.8	–
	(4.2)	(2.3)	(1.9)	(1.9)	(2.1)	(1.8)	(1.3)	(2.0)	(2.1)	(0.9)	(1.6)	(6.8)[E]	(5.3)	–
Trifluoroethanol	>60	>60	>60	>60	>60	>60	>60	20	17	58	7.1	>64	>99	–
	(<4)	(<4)	(<4)	(<4)	(<4)	(<4)	(<4)	(1900)	(2300)	(1100)	(3100)	(<4)	(<4)	–
Xylene*	5.2	14	23	3.4	18	3.0	44	48	57	>60	28	5.0	7.9	–
	(3.4)	(1.3)	(0.8)	(0.5)	(1.4)	(0.6)	(0.7)	(0.1)	(0.1)	(<0.05)	(0.3)	(2.8)	(2.4)	–

[A] All breakthrough curves exhibit Type A behavior except where noted by B,C,D, or E. Top values are breakthrough times (min); values in parentheses are permeation rates ($\mu g/min/cm^2$) except those solvents noted by an asterisk, which are permeation rates in $mg/min/cm^2$.

000505

FIGURE CAPTIONS

Figure 1 Schematic of permeation measurement system.

Figure 2 Experimental setup for glove permeation experiments. (a) Cross section of permeation cell; (b) Exploded view of cell.

Figure 3 Five types of glove permeation behavior.

Figure 4 Effect of glove thickness on permeation rate.

Figure 5 Effect of chloroform/toluene mixture on permeation rate. Individual rates can be predicted if pure component rates are known.

Figure 6 Effect of a pentane/trichloroethylene mixture on permeation rate. Dashed line denotes a large positive synergestic effect at a 50:50 mixture.

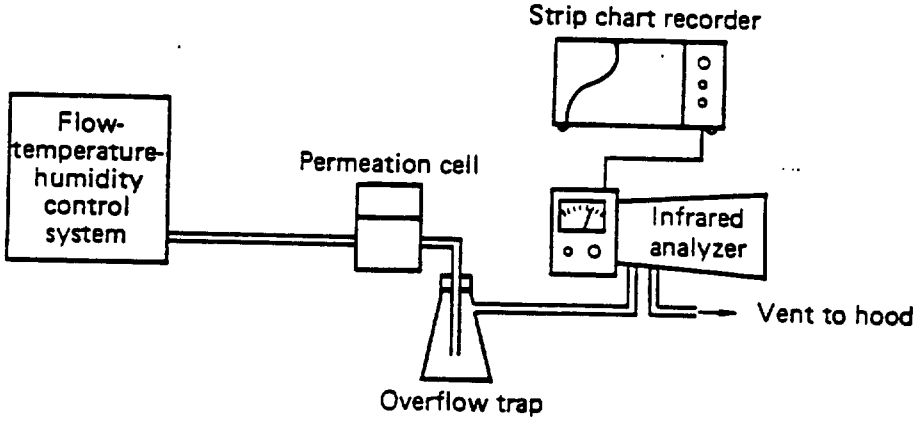
Strip chart recorder
Flow-
temperature-
humidity
control
system
Permeation cell
Infrared
analyzer
Vent to hood
Overflow trap

Nelson - Fig. 1

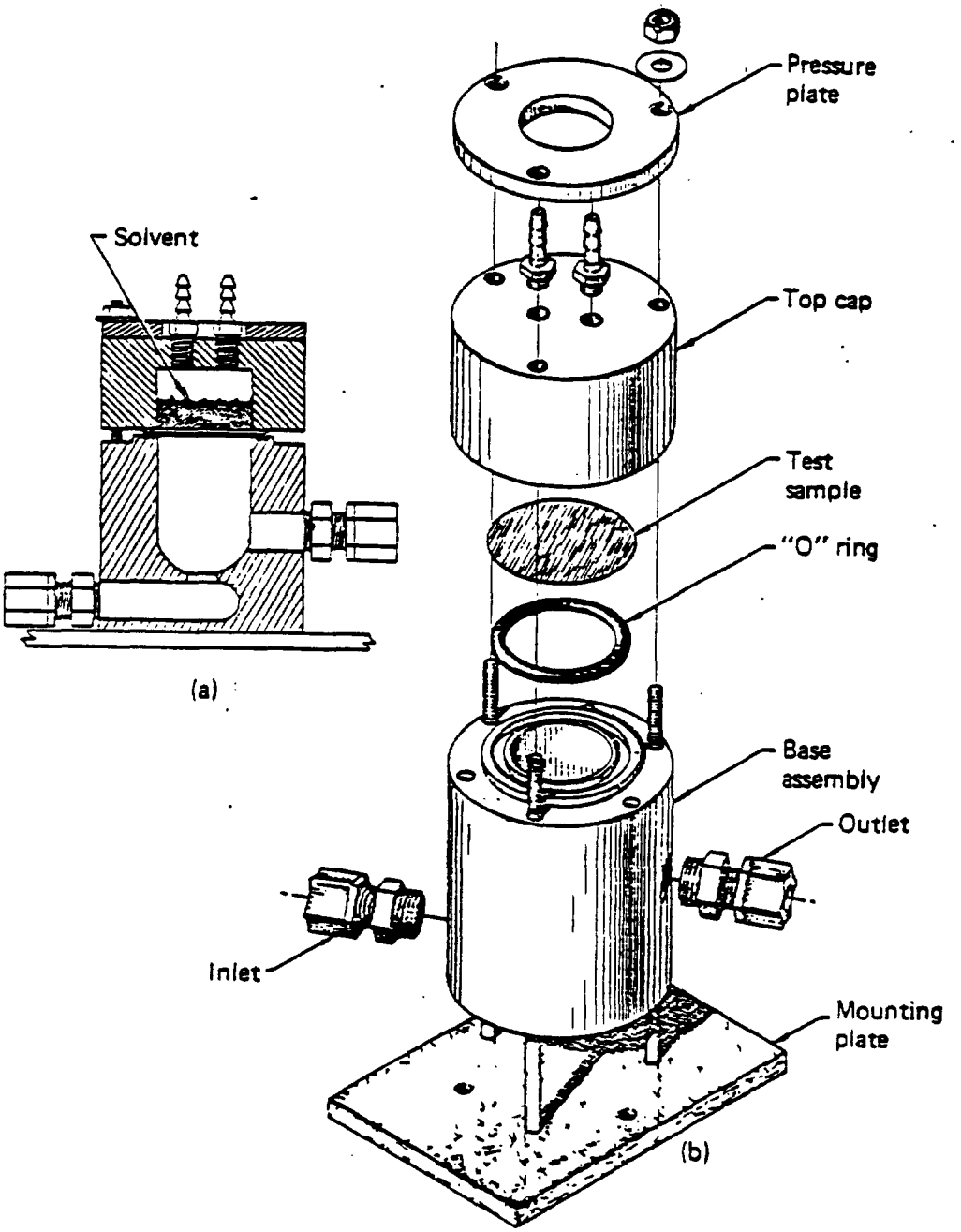

000508

Nelson - Fig. 2

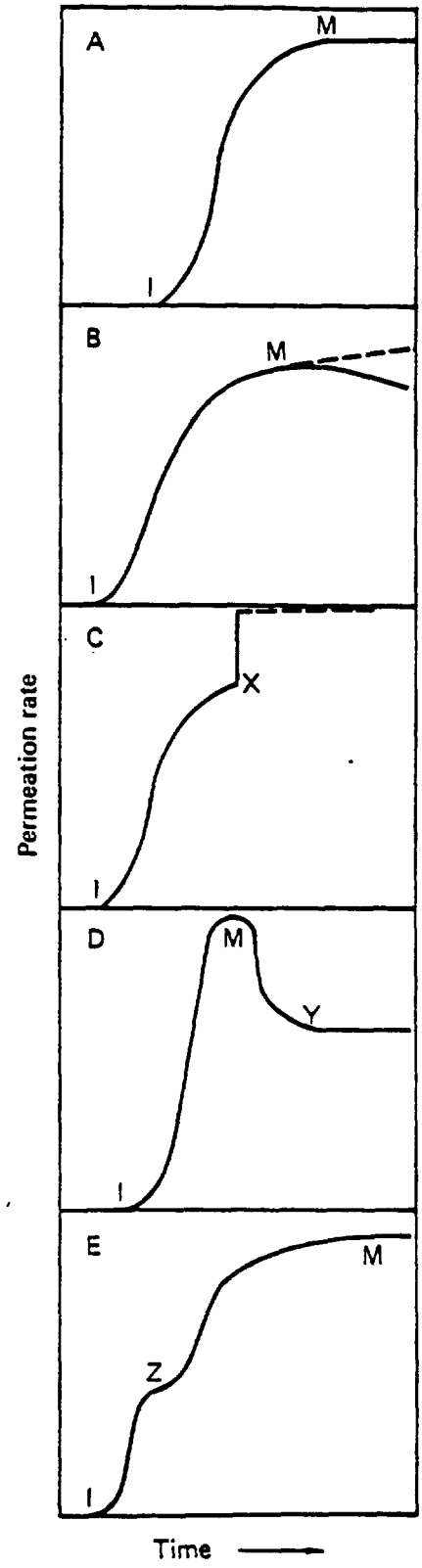

000509

Nelson - Fig. 3

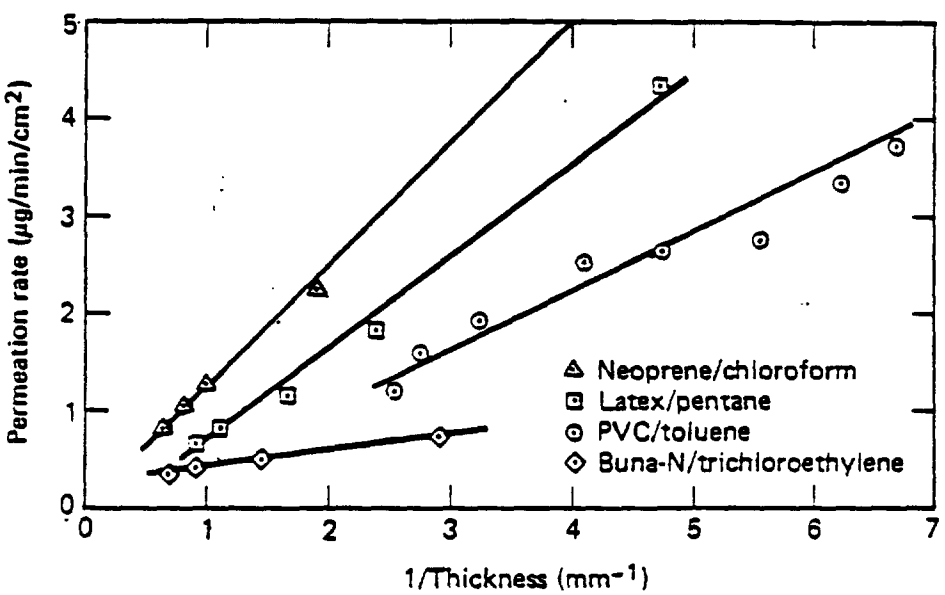

000510

Nelson - Fig. 4

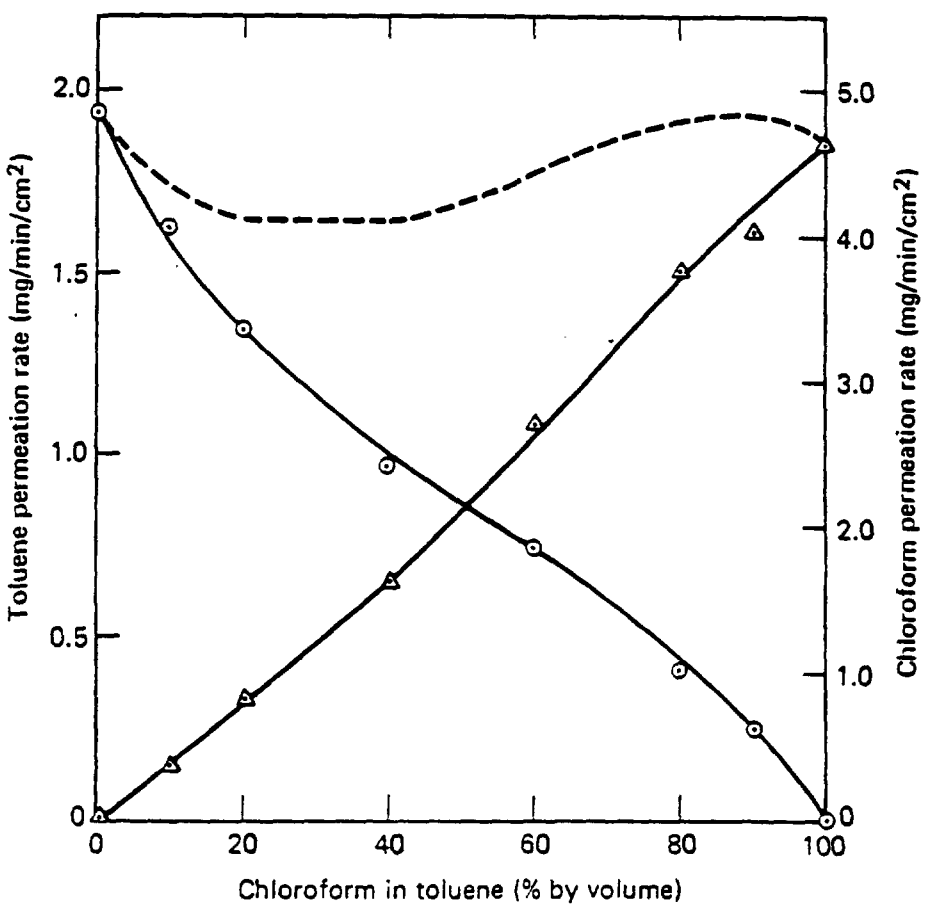

000511

Nelson - Fig. 5

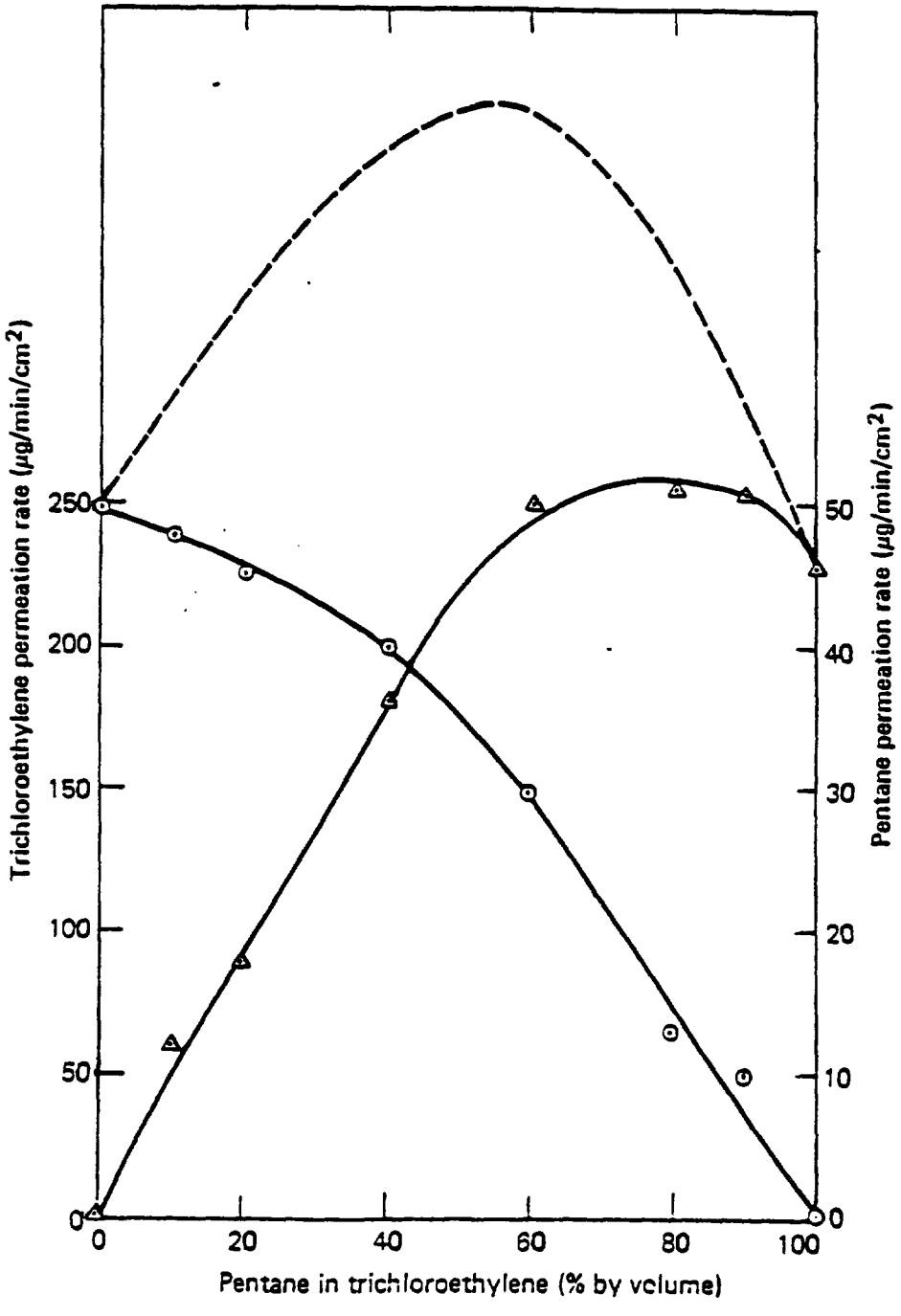

000512

Nelson - Fig. 6