PLAINTIFF'S EXHIBIT

ASI-631

AMERICAN-Standard

HEATING PLUMBING

INSTALLATION INSTRUCTIONS

AMERICAN ARCOFLAME OIL BURNERS

CAPACITY 1.0—1.65 GPH.

Models M, MF, MS and MFA

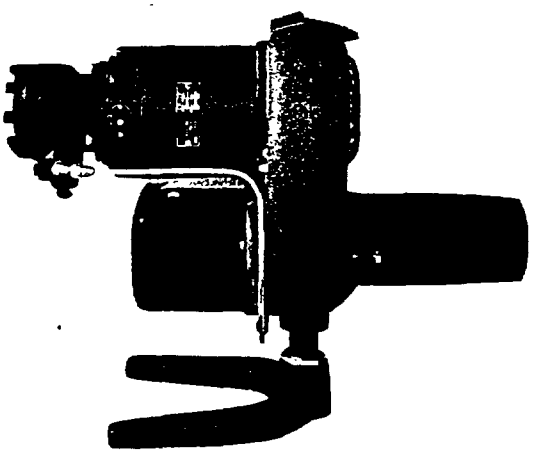

MODEL M and MS
PEDESTAL TYPE

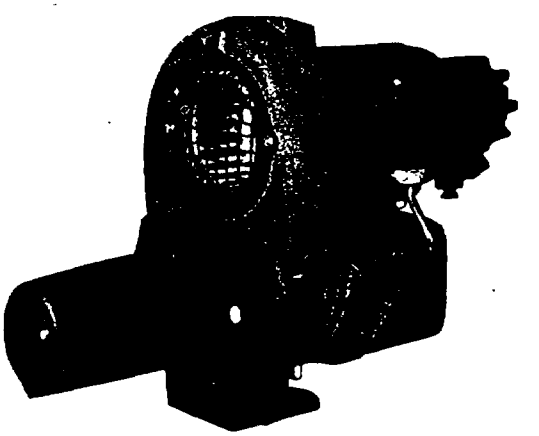

MODEL MF and MFA
FLANGE TYPE

ARSS 1045 (7-8-46)

AMERICAN RADIATOR & Standard Sanitary
New York CORPORATION Pittsburgh

Part 77515

18126

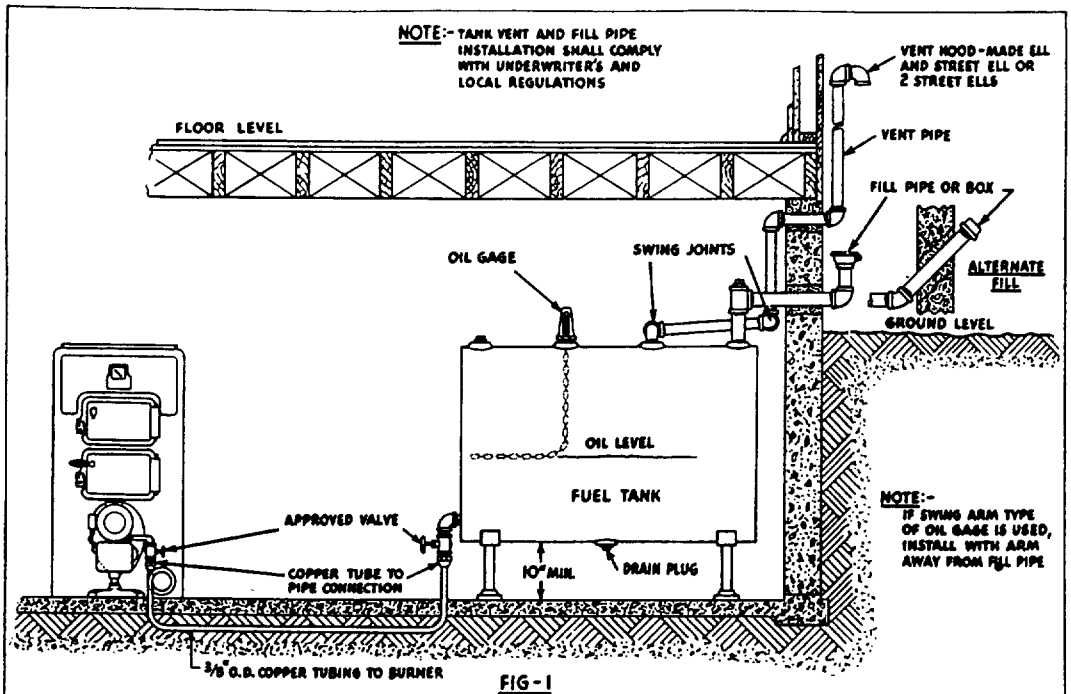

FIG-1

SINGLE BASEMENT TANK INSTALLATION - SINGLE PIPE SYSTEM

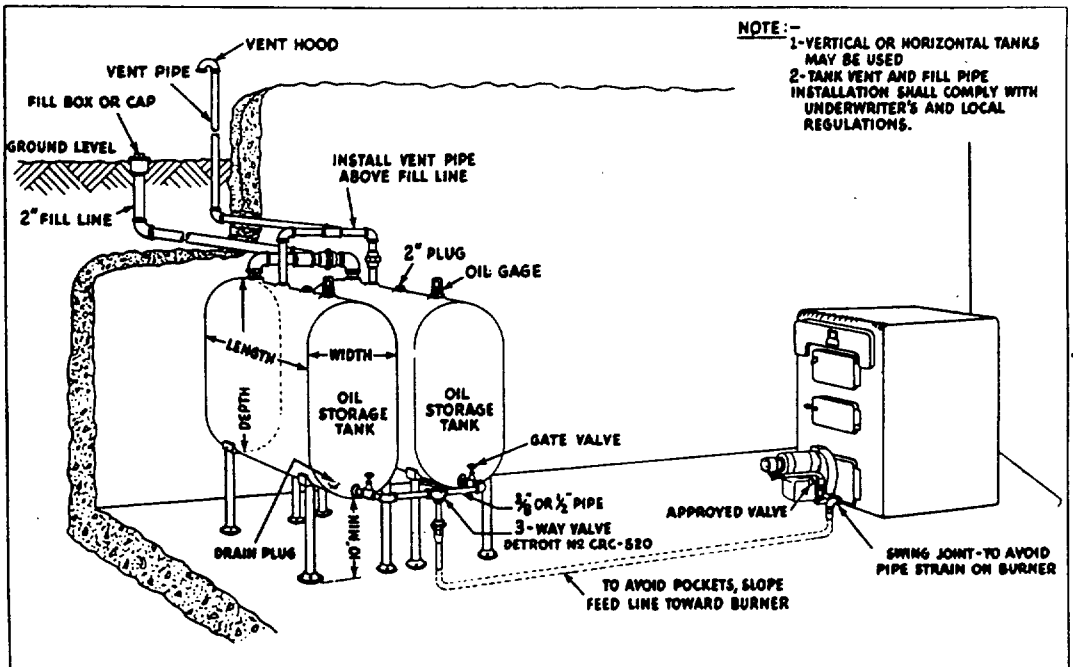

FIG-2

DUAL BASEMENT TANK INSTALLATION - NOT PERMITTED IN ALL LOCALITIES

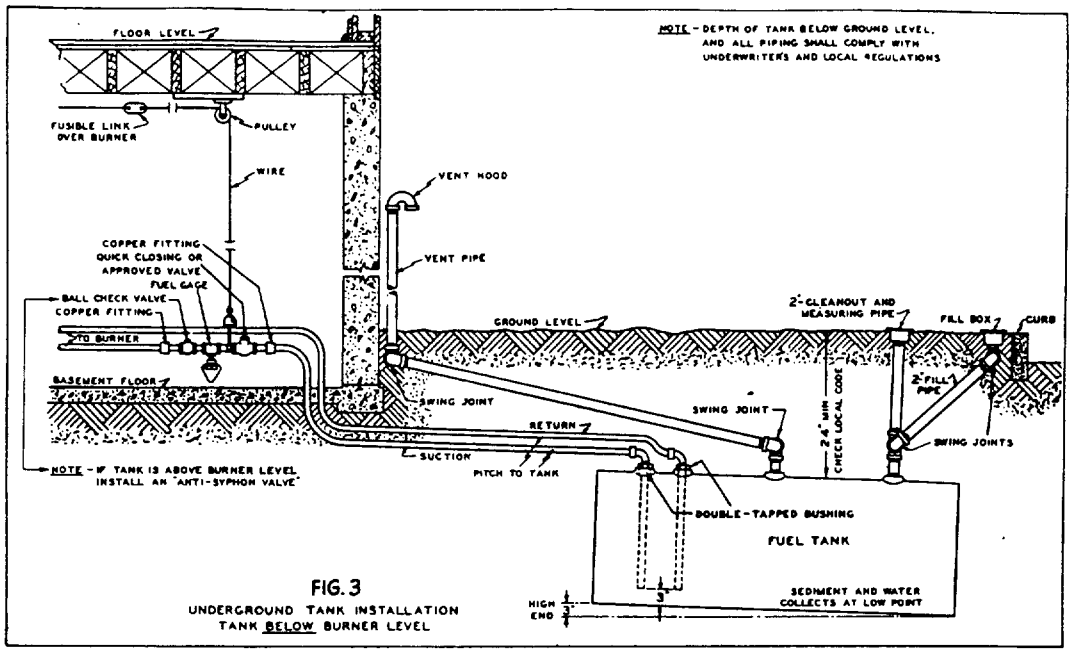

FIG. 3
UNDERGROUND TANK INSTALLATION
TANK BELOW BURNER LEVEL

ARCOFLAME OIL-BURNER installations must be made to comply with:
(a) National Board of Fire Underwriters regulations. (b) Local regulations or codes. (c) Commercial Standards CS-75.

For detailed information, consult the "ARCOFLAME INSTALLATION & SERVICE GUIDE", available from your wholesaler.

OIL TANK

GENERAL: Use copper tubing for all oil lines. For threads use a good OIL-PROOF joint compound. Use only ONE OIL LINE (suction) on all basement tanks when connection is made to outlet at bottom of oil tank. Bottom of tank should be above center line of pump.

USE TWO OIL LINES (suction and return) on all underground tanks.

Burners come from factory with pump arranged for ONE PIPE HOOK-UP. For TWO PIPE HOOK-UP see pump drawing, Page 8, Fig. 11, and instructions attached to pump.

When connecting more than one burner to a single tank, **separate suction lines shall be run to each burner.** Return lines may be manifolded.

Whenever a new burner is installed to replace an old one, a new suction line must be installed, or else, the old one must be thoroughly tested for leaks, to avoid serious operating difficulties in the future.

Never fasten oil lines along basement ceiling.

BASEMENT TANK INSTALLATION: (See Figures 1 and 2). ONE PIPE

1. Erect tank on an iron stand or iron pipe legs with floor flanges about 10" high. Never rest tank on the basement floor.
2. Find a suitable spot, and cut a single or two holes in foundation or framework through which Fill and Vent Pipes pass.
3. Install the Fill and Vent Pipes. Make sure all joints are tight, and that they pitch to drain to the tank, with no traps.
4. Neatly plug hole in foundation or wall with suitable water proof material.
5. Screw a ¼" nipple and the required shut-off valve into the lower outlet of the tank.
6. Screw another ¼" nipple and a valve into the pump **inlet** opening. See Fig. 11.
7. Run a piece of heavy walled soft copper tubing between the valves. Provide a loop or a swing joint at the burner connection.

UNDERGROUND TANKS: (See Figure 3). TWO PIPE

1. Insert by-pass plug "B" into pump as per instructions attached to pump. Also see Page 8, Fig. 11.
2. Locate the tank at least 4 feet from the foundation, with the suction lines as short as possible, and to be convenient for filling.
3. The depth shall be such that the top of the tank is below the frost line. In general this is a minimum of two feet, unless local regulation requires more.
4. Install Fill, Vent, Cleanout or Measuring Pipe, and Oil Gauge as shown in Fig. 3.
5. SUCTION LINE SHALL BE ONE PIECE from inside the wall and reach within 3" of bottom of tank. Use ½" O.D. for runs about 30 feet from tank to wall, ⅝" O.D. for longer runs. Pitch line from wall back to tank.
6. To inside end attach an approved shut-off valve.
7. Into the valve, screw a short nipple.
8. Screw a "Tee" with a ½" side outlet to the above nipple, pointing down.
9. To this side outlet, secure a Fuel Storage Gauge.
10. Next install a Horizontal Ball Check Valve (or an Anti-Syphon Valve if required).
11. Run a one piece copper tube suction line from the Check Valve to the required valve at the burner. This tubing may be one size smaller than the outside line. Provide an expansion loop at the burner connection.
12. RETURN LINE must be used. It must be same or one size larger than the suction line and should extend into the tank for the same length as the suction line.

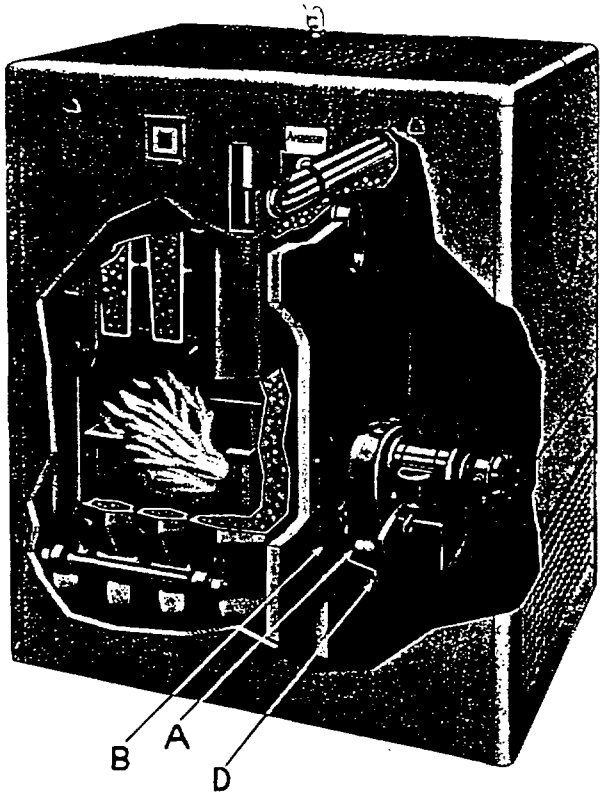

FIG. 4—Flange Type Burner (MF) Mounted on Boiler

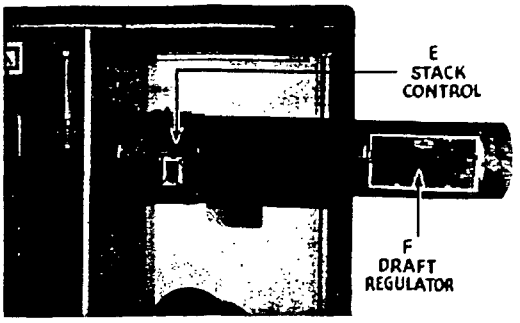

FIG. 5—Smoke Pipe Showing Stack Control Location Within and Draft Regulator Outside of Cabinet

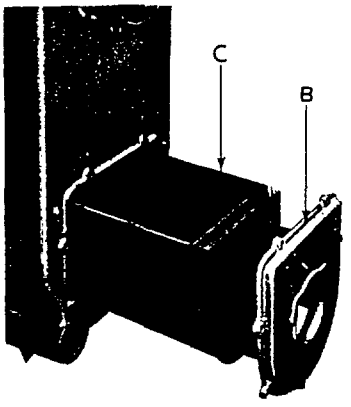

FIG. 6—Steel Chamber Withdrawn from Boiler

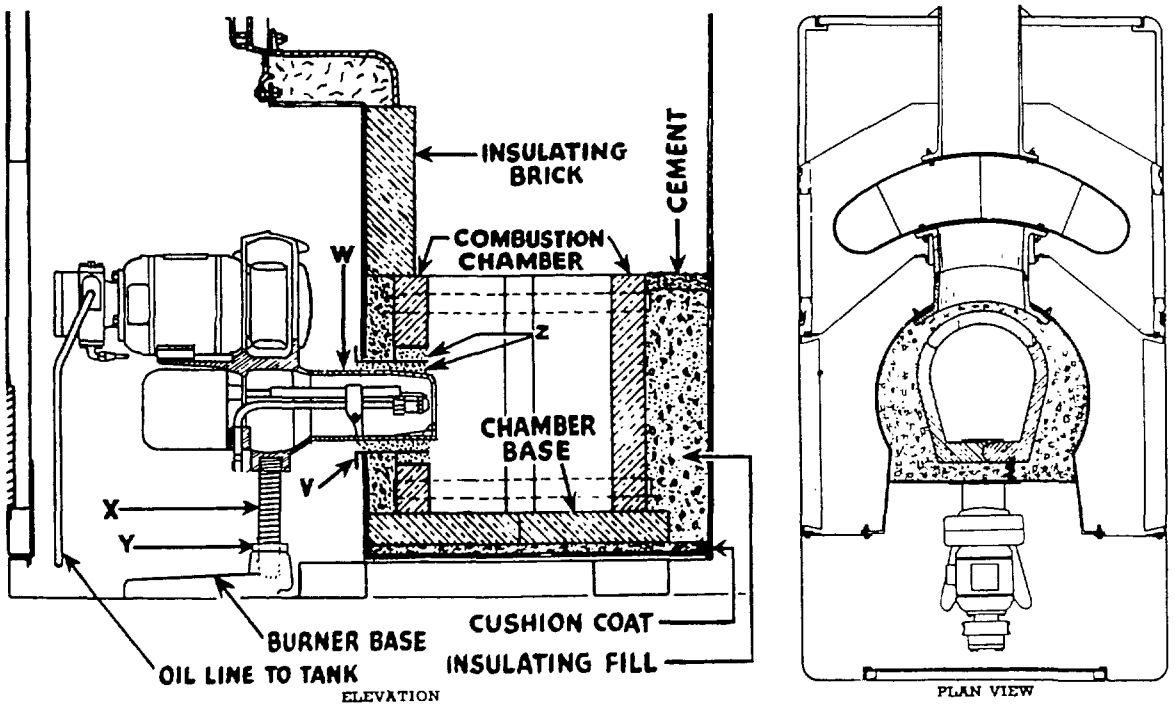

FIG. 7—Pedestal Type Burner Model M and MS Installed with a Pre-Cast Chamber

ERECTING BOILER

Erect the boiler as outlined in the "Erecting Directions" furnished with the boiler. It must be set on a solid concrete floor or preferably a concrete slab about 3 in. high.

COMBUSTION CHAMBER—STEEL—(See Fig. 6)

The steel combustion chamber "C" is fastened to the oil burner mounting plate "B" as depicted in Fig. 6. This is completely assembled at the factory.

NOTE: If a Pre-Cast Refractory Combustion Chamber is furnished, follow installation instructions found with the chamber.

OIL BURNER INSTALLATION—FLANGE TYPE MODEL MF FOR TUXEDO OIL HEATING UNIT

1. Bolt the mounting flange "A" to the burner mounting plate "B."
2. Slide burner into opening for the Air Tube.
3. Tighten burner to mounting flange with short hexagon head plug "D." See Figs. 4 and 8.

MODEL MFA FOR ARCOLINER OIL HEATING UNIT

After installing the 4 bolts with lock nuts to the firing plate of the boiler, attach mounting bracket to burner and tighten with short hexagon head plug. Seal on inside of bracket space around gun with putty and bolt assembly to boiler. (See sketch below.)

OIL BURNER INSTALLATION—PEDESTAL TYPE—MODEL M AND MS (See Fig. 7)

1. Regulate the Burner height by loosening lock nut "Y" and turning adjusting nipple "X" to be in exact center of Air Tube Sleeve "V." Tighten lock nut "Y."
2. Slide Burner through opening in the Pre-Cast Combustion Chamber until end of Air Tube "W" projects about ¼" beyond the inside of the chamber.
3. **Be sure** Burner is centered, not touching heater, and at right angles to the heater.
4. **Seal thoroughly the space "Z"** between Air Tube "W" and Sleeve "V"—also between Sleeve "V" and the chamber, with wet asbestos cement. This is done within the heater.

ELECTRICAL WORK

Wire the burner and controls exactly as shown in the diagram found in the control package. Model MF and M Burners are furnished for 115 Volts, 60-Cycle, AC only.

CONTROLS

Insert controls in openings shown on drawing in "ERECTING DIRECTIONS" accompanying Heating Unit. Connect the Controls as per wiring diagram found in control package.

NOTE: **Constant ignition is Standard for the M, MF, MS and MFA burners.**

DRAFT REGULATOR—See Fig. 5

Install the automatic Draft Regulator "F" as outlined in the instructions furnished with the Regulator. It must be located between the stack control and the chimney, and at least 12" from the stack control. The closer to the chimney the better. The draft regulator may be located in the chimney, below or above the smoke pipe connection.

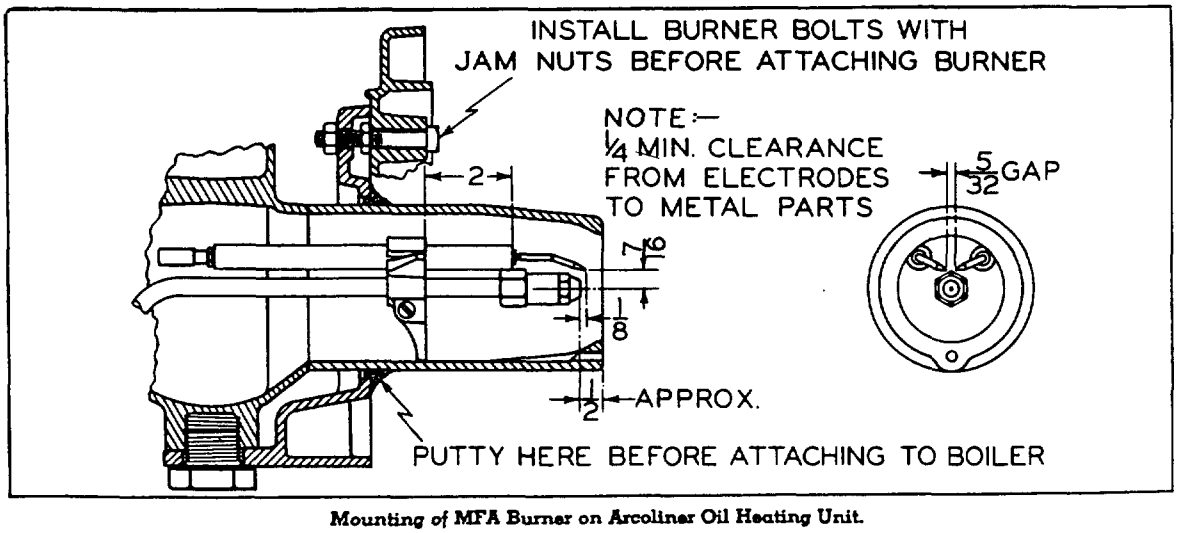

Mounting of MFA Burner on Arcoliner Oil Heating Unit.

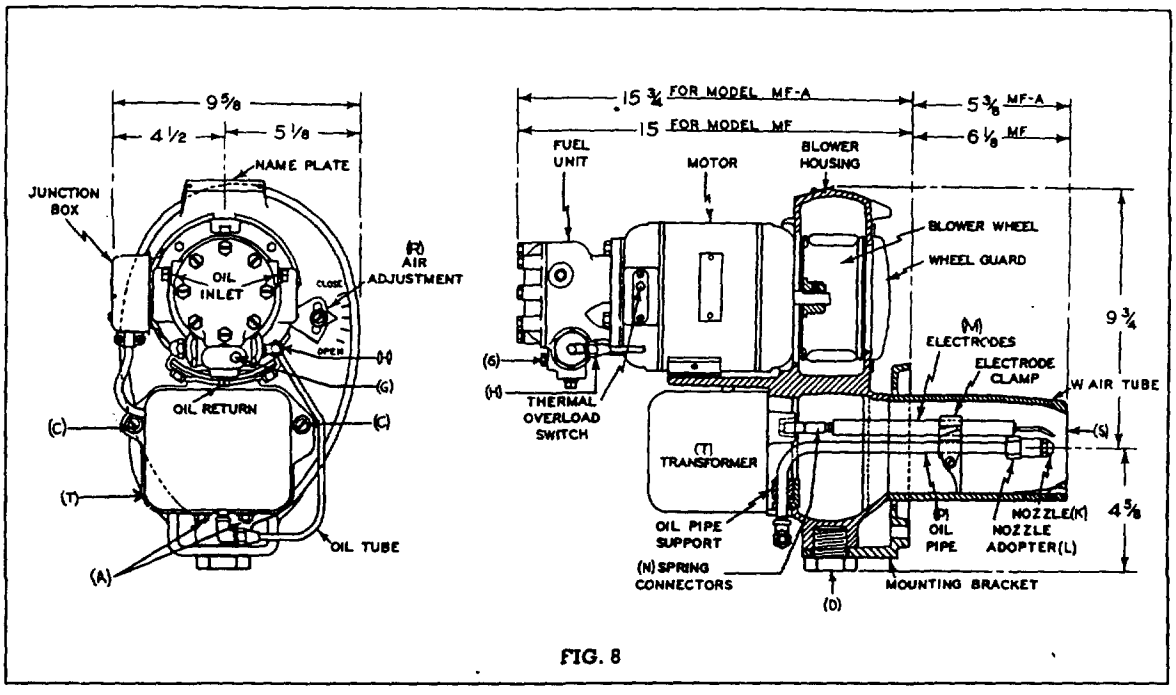

FIG. 8

Hand Built Combustion Chambers

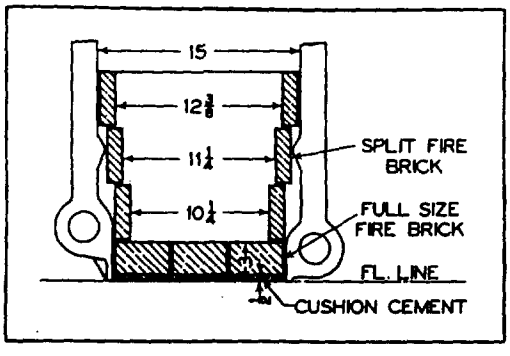

Arcoliner (Dry Base)

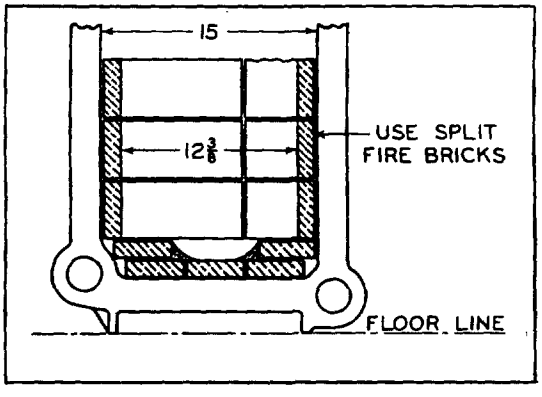

Arcoliner (Wet Base)

RECOMMENDED FIRING RATES AND HAND-BUILT COMBUSTION CHAMBER SIZES

No. of Unit	Nozzle Size Gals./Hr.	Spray Angle	Oil Press.-Lbs.	Inside Length of Combustion Chamber Ins.	
64	1.25	90°	100		
65	1.35	90°	100		
1120-F	1.25	90°	90		
S or W-153-DO	1.0	90°	100	9¾"	Distance from Comb. Chamber Floor to Center Line of Nozzle, Ins. 5¾"
S or W-154-DO	1.25	90°	100	11	
S or W-155-DO	1.5	90°	100	12	
S or W-0153 or 0153-T	1.0x	90°	100	9¾"	
S or W-0154 or 0154-T	1.25	90°	100	11	
S or W-0155 or 0155-T	1.50	90°	100	12	

x 0153-T with tankless heater and steel combustion chamber fire with 1.25 Gal. nozzle.

STARTING THE BURNER

1. Remove the Oil Pipe Assembly as follows (see Figs. 8 and 10):

(a) Disconnect the copper tube fitting "H" at the pump.

(b) Remove the **two** screws "C" which hold the transformer in place.

(c) Pull the transformer "T" out as far as it will go, about 2 inches. The transformer will swing down, out of the way. See Fig. 10.

(d) Remove the slotted head screw "B" (Fig. 10) which is located to the right of the steel Oil Pipe "P".

(e) Pull out the Oil Pipe Assembly.

2. Install the proper size nozzle "K" required to carry the load. See Fig. 8. The minimum capacity of this burner is 1 gallon and the maximum 1.65 gallons per hour.

NOTE: Remove the strainer from the nozzle and see that the swirl pin is tight. Replace strainer and screw nozzle "K" into the adapter "L". MAKE SURE THIS IS TIGHT.

IMPORTANT: Hold nozzle adapter "L" with wrench while **attaching** or **removing** nozzle "K".

3. Check Electrodes "M". Use a ruler to make these measurements. See Fig. 9. Gap $\frac{1}{8}$" to $\frac{5}{32}$". Electrodes are set approximately $\frac{1}{8}$" in front of nozzle, and $\frac{1}{16}$" above the nozzle center. Bare Electrode Wires shall clear all metal parts by at least $\frac{1}{4}$".

4. Replace Oil Pipe Assembly, and Transformer. Spring Connectors "N" automatically make connection between Transformer and Electrodes "M".

5. Open all Oil Valves.

6. Swing open observation port or fire door of heater.

7. See that the proper fuses are in place, set thermostat above room temperature.

8. Purge the air from the pump assembly by removing the lower plug "G" on front of pump. See Figs. 8 and 11. Close burner switch and run burner until oil flows from this opening. Catch this in a can or jar. When no further air is evidenced and a steady oil stream appears then:

9. Stop the burner and replace the plug "G". See Figs. 8 and 11. Or, insert PRESSURE GAUGE at this point.

10. Start Burner. Make Air Adjustments at "R" (Figs. 8 and 10) to produce a clean flame, by loosening screw "R" and shifting pointer.

11. Inspect all joints and fittings for oil leaks.

FINAL ADJUSTMENTS

1. Adjust the Draft Regulator "F" (Fig. 5) to provide about .02" draft over the fire. Use a DRAFT GAUGE.

2. Close the Air Adjustment "R" (Figs. 8 and 10) until the flame becomes a trifle smoky. **Then open it carefully** to the point where a smooth clean flame is procured, and tighten screw.

NOTE: The burner comes with the tip of the nozzle $\frac{1}{2}$" back of the air tube opening "S". See Figs. 8 and 9. This position is proper for most installations. However, in some special cases a better and quieter flame is obtained by shortening or increasing this distance. This may be done by loosening the two nuts "A" (Fig. 10) on each side of the Oil Pipe, where the Oil Pipe comes through the cast iron blower housing. Push the Oil Pipe forward, with the fire going, as far as it will go. Now pull the pipe back very slowly and by careful observation the best location is readily determined. Tighten the two nuts "A".

3. With a Flue Gas Analyzer determine the actual amount of CO_2. Adjust for final CO_2 reading approximately 10%.

4. Check the operation of all controls as outlined in the pamphlets found with each control carton.

5. Oil the motor at both oilers, with a good grade of electric motor oil.

6. Hang Operating Instruction Card and Oil Burner Certificate if an FHA installation, in vicinity of burner. Fill in completely data requested.

CAUTION

If the boiler room is all enclosed, provide adequate ventilation to furnish sufficient air supply to burner for complete combustion. Provide a minimum of 10 sq. in. of air opening for each gallon of oil burned per hour.

FIRE EXTINGUISHER: If required by local ordinance, install approved type.

FOLLOW-UP SERVICE: Inspect installation 2 or 3 weeks after placed in operation, and recheck the control system, electrodes and their setting, change in flame characteristics, CO_2 draft stack temperature, as well as oil lines for leaks.

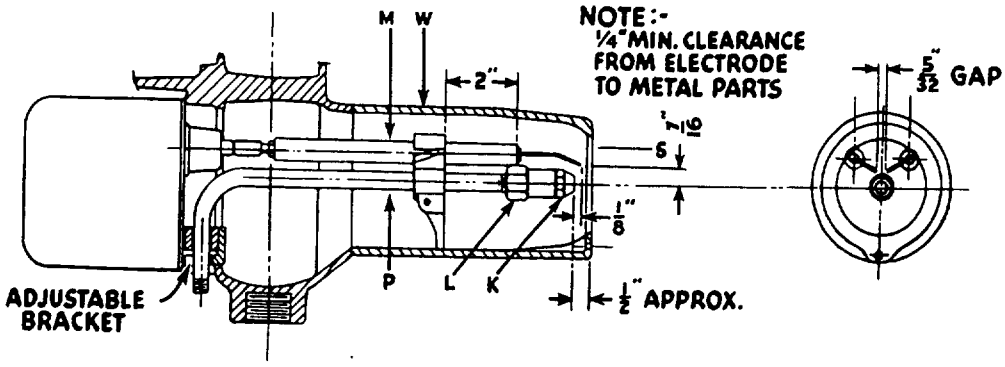

FIG. 9—Electrode Settings

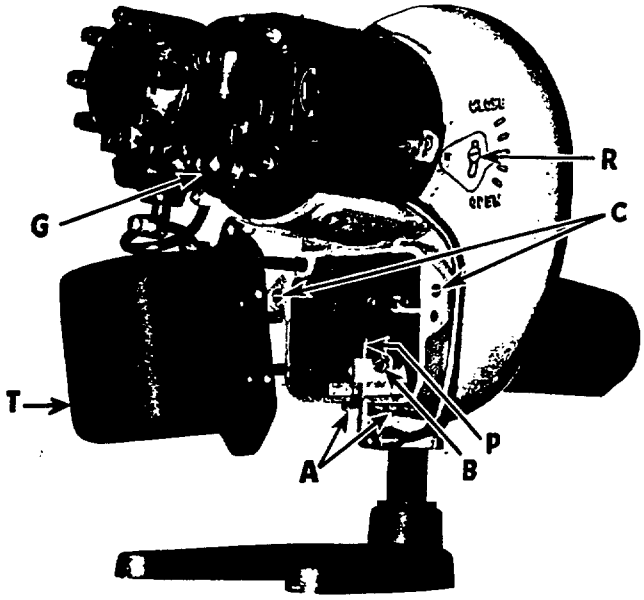

FIG. 10—Transformer Pulled Back and Out of the Way

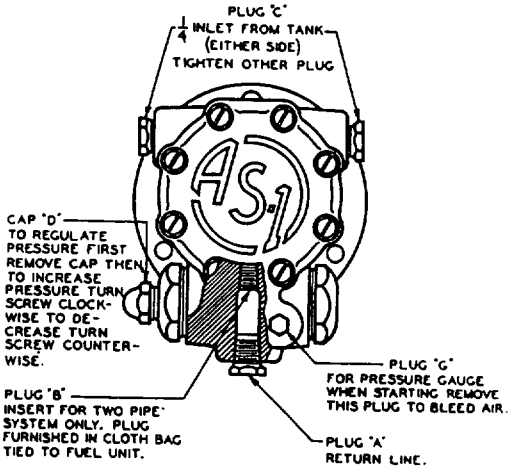

FIG. 11—Fuel Unit-Pump

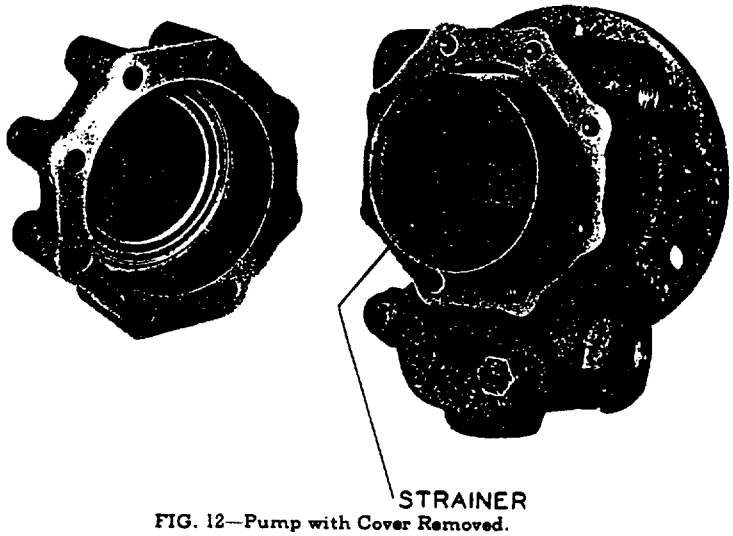

FIG. 12—Pump with Cover Removed.