Therminol fluid heat systems

design, operating, and maintenance guide
or low-cost, low-pressure heat transfer.

/FF-31

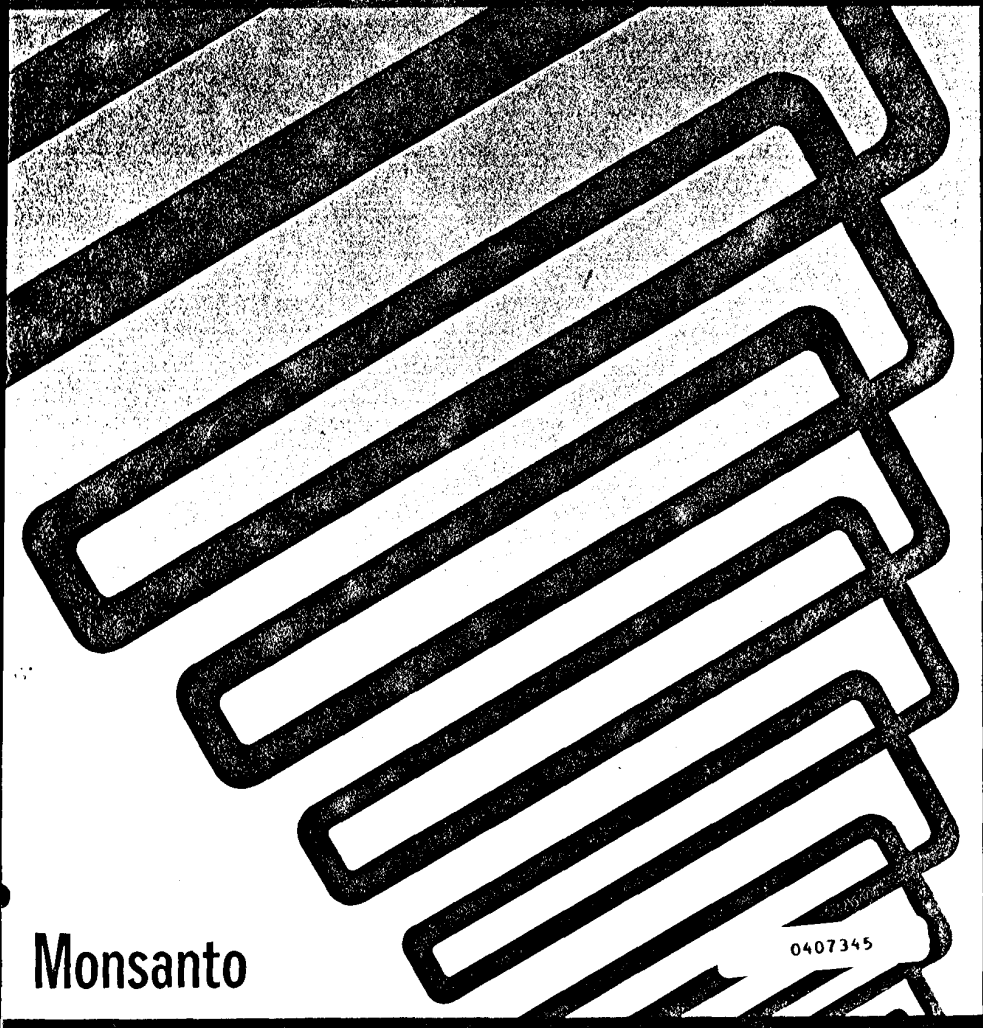

Monsanto

0407345

TOWOLDMON0030932

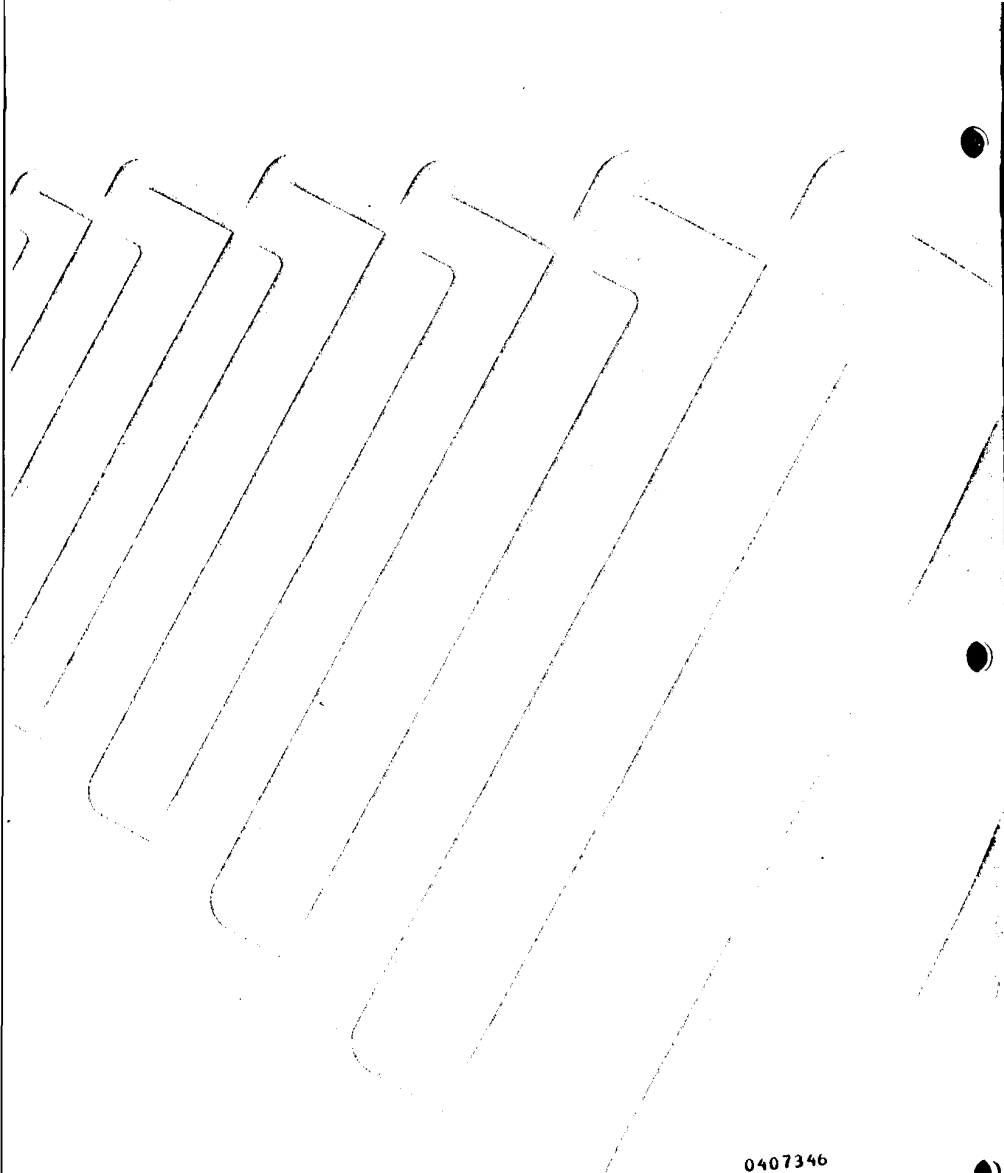

0407346

"Nothing contained herein is to be construed as a recommendation to use any product in conflict with any patent. MONSANTO MAKES NO WARRANTIES AS TO THE FITNESS OR MERCHANTABILITY OF ANY PRODUCTS REFERRED TO, no guarantee of satisfactory results from reliance upon contained information or recommendations, and disclaims all liability for any resulting loss or damage."

2-3348-0173 10 LITHO IN U.S.A.

TOWOLDMON0030933

CONTENTS

	Page
Therminol® Economies in Indirect Heating	2
Typical Applications	3
General Design Factors	4
System Factors	4
Fluid Factors	5
Design Factors of Components	6
The Heater	6
Determination of Heat Transfer Coefficients	8
Pumps — Filters — Materials	8-9
Expansion Tank	9
Pipework	9
Expansion Tank & Cold Seal Trap	10
Insulation — Packing — Valves — Controls	11
Fire Protection — Safety Controls	12
Typical Systems	13
Start-Up Procedure	17
Operating Instructions	18
Safe Handling & Disposal	19
Engineering Data	20

Therminol is a registered trademark of Monsanto Company

0407347

TOWOLDMON0030934

Therminol® Heat Transfer Fluids new economies in indirect heating

Monsanto has had over two decades of experience engineering and formulating fluids for transfer of heat. Systems for using Therminol fluids have been developed that run the gamut of indirect heating and cooling applications, from chemical and petroleum processing to space heating.

Therminol fluids are available for heat transfer in a series of temperature operating ranges. The range extends from a high temperature fluid operable up to 800°F to a low temperature fluid operable above 575°F that still remains a liquid below −70°F for cooling applications.

The major economies in using Therminol liquid heat transfer over steam or other vapor systems is the lower cost of the installation and operation. Unpressurized or low pressure Therminol liquid systems can significantly reduce capital costs. The savings in eliminating installation of large diameter vapor piping, flash drums, safety valves and pressure control devices can amount to 25-50% of system cost. A second source of savings is in operation: the non-pressurized systems require minimum maintenance, eliminate heat lost by condensation in supply lines, and do not usually require licensed operating personnel.

The major advantages of a Therminol system over oil is greater versatility in operating temperature, better chemical stability, reduced make-up, and closer control of and faster response to temperature change as required by the operation. Therminol fluids have greater heat carrying capacities and more practical viscosities over their temperature range. In a properly designed system, Therminol fluids will give temperature control to within ± 2°F, have little degradation sensitivity, and give long trouble-free service.

The number of divers applications for indirect heating with Therminol fluids is virtually limitless. Monsanto offers Therminol fluids suited for low, medium or high temperature operating ranges. The fluids possess various chemically-engineered use-advantages. These include better pumpability, high heat carrying capacity, low pour point, thermal- and chemical stability, low vapor pressure, good viscosity index, and others. These fluid characteristics have proven advantageous in heat transfer systems such as the typical installations listed.

Monsanto's Therminol fluids are described in a brochure on each fluid that describes its essential physical and thermal properties. The following pages detail the general engineering concepts to be observed and recommendations for the design of systems, their operation and maintenance. By applying the physical constants of the particular fluid to be used to the engineering parameters described — the system designed will be most economical to construct, efficient to operate and most satisfactory in its performance.

0407348

TOWOLDMON0030935

Therminol Fluid Heat Transfer can be used in these applications:

- Tanker and Barge Heating
- Off Shore Oil and Gas Platform Heating
- Chemical Process Heating
- Rubber, Plastics and Paper Processing Heat
- Waste Heat Recovery Systems
- Alkyd Paints and Resin Kettle Heating
- Space Heating for Apartments and Public Buildings
- Petroleum Refining
- Brine Liquors Concentration and Distillation
- Bituminous Materials Heating
- Converters: Calendering, Crimpers, Hot Presses
- Metal Treating: Annealing, Stress-Relieving Welds and Castings Heaters
- Surface Coatings Curing and Commercial Baking Ovens
- Synthetic Fiber Production and Finishing Process Heating

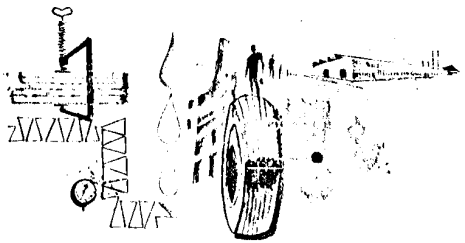

0407349

TOWOLDMON0030936

General design factors in Therminol heat transfer systems

Advantages of proper design

Therminol systems provide heating and cooling at relatively low capital cost. The fluid gives long service, the system requires minimum maintenance, and installations do not usually require supervision by a licensed stationary engineer. Properly designed, the savings with Therminol systems are cumulative.

The Therminol fluid for a particular system is selected according to the temperature requirements of its operation. In any range, the fluids are ideally suited for systems that must deliver uniform heat (up to 800°F), precise temperature control, and quick response to heating or cooling demand.

While there is nothing profoundly different or highly complicated about a Therminol system (compared with older liquid heat transfer systems) certain design parameters must be observed for the system to give trouble-free service, to operate efficiently, and to return all the benefits of heating or cooling with a non-pressurized liquid.

The basic engineering checkpoints of designing a system are three fold:

1) The heater:
   to insure non-degrading delivery of heat from the fuel,
2) The pumps and piping:
   to insure proper handling of the fluid and maintain the correct flux at user stations and adequate system circulation, and
3) The materials and construction:
   to insure compatibility and proper layout and design.

With sufficient heater capacity, good control of flow at user-stations and compatible materials, a well-designed Therminol system will give reliable, efficient, and precise delivery of heat. Proper selection of fluid and a clean, moisture-free system will ensure minimum maintenance and trouble-free operation.

System factors

Liquid heat transfer is basically heating an *adequate quantity* of fluid to a *practical working temperature,* circulating it to *heat-accepting user stations* at a *rate* to raise or maintain the *temperature* of the *heat-user* as required by the process. Thus in designing a system, the following requirements should be considered:

1. Is the process a continuous or batch operation?
2. What is the heat demand and temperature requirement of each heat user? The cooling requirement?

TOWOLDMON0030937

3. How much heat transfer area will be practical or available at user-stations and what *coefficients of heat transfer can be expected* from the product at the user surfaces?
4. Will more than one heat-user be on stream at the same time? At the same temperature? At different temperatures?
5. What heat losses will be expected in the physical layout of the system?
6. Can existing heating requirements be served by incorporating in the new system to eliminate older equipment or eliminate other types of heat delivery?
7. Are expanded heating requirements probable?

A basic starting point is to estimate the heat balances and determine the total heat demand of the system. This will guide selection of the heater capacity, delimit fluid operating temperatures, and indicate the type of Therminol fluid the system will require.

Fluid factors

Therminol heat transfer fluids are chemically and thermally stable liquids. They resist chemical and physical change at all temperatures below their maximum bulk temperature operating limits. The operating temperature limits for each Therminol fluid are specified on the product's data sheet. When not subjected to contamination or heat stress beyond their limits, Therminol fluids will give years of service without significant physical or chemical change. Simple laboratory tests should be made periodically on Therminol fluid to determine its condition as part of good system maintenance.

Therminol fluid is used as a liquid phase heating medium, so transfer of heat is by sensible mode rather than latent mode as with condensing vapor. *Heated liquid, circulated at reasonable velocities* over a heat-using surface, can be a more efficient and more readily controlled method of heat transfer than pressure-controlled condensing vapor systems.

Therminol fluids are designed to have physical properties that enhance their value in liquid phase heat transfer. Low vapor pressure and high boiling ranges permit operation at their maximum recommended temperatures without the need to pressurize the system. *The particular types of chemical* compounds used as the base stocks for Therminol fluids have always been recognized as among the most thermally stable.

As with any heat transfer fluid, the design of the system must take into account the relationship between liquid velocity and the heat load from the heat source. The liquid film in immediate contact with the heat donor surface (whether the heater fuel is electricity, gas or oil) is subjected to higher temperatures than the bulk temperature of the balance of the fluid. The velocity of the circulating fluid, therefore, is the critical determinant of how long *the film is subjected to the higher temperature.* The differential between the fluid bulk temperature and the film temperature is dependent upon the fluid velocity over the surface of the heat donor and the physical properties of the fluid used. Therminol fluids have high specific heat and thermal conductivity values which make them efficient heat carriers.

In selecting both the heater and the fluid, the maximum film temperature — rather than the *average — should be considered and a reasonable* margin allowed to enable the fluid to give the longest practical service life. The proper selection of fluid is important. It is the link between the heat donor and the heat user. Therminol fluids are formulated to provide a strong and efficient link for both heating and cooling demands.

Each Therminol fluid is supplied with its maximum bulk fluid temperature specified. Therminol fluids are available for operating in a series of ranges, from low temperature fluids operable from below −70° to above 575°F (−56° to 302°C) to high temperature fluids suitable for heating to 800°F (427°C).



0407351

TOWOLDMON0030938

Design factors of the components of a Therminol system

The heater

The heater is the most critical component in designing a Therminol system. With the proper balance of heating capacity, temperatures and fluid velocity the service life of the heat transfer fluid is increased to the maximum.

Two basic fired heater designs for Therminol fluids are available: the liquid tube and fire tube types. In liquid tube heaters, the Therminol is pumped through the tubes as it is heated; in fire tube types, Therminol flows through the "shell" of the heater surrounding the fired tube or multiples.

When bulk fluid operating temperatures of 500°F (260°C) (or higher) are required, a liquid tube type heater is to be preferred . . . *unless* a specific heater design is devised to force a uniform steady flow of liquid over the heat donor surfaces.

Therminol fluids transfer heat as liquid. To avoid hot spots in a Therminol heater, the fluid should be pumped over the heating surfaces at sufficient velocity so that no area of stagnant fluid occurs.

Fluid velocities over the heat donor surfaces should be relatively high; generally 4 to 10 feet per second. This helps avoid excessive film temperatures that may be detrimental to heat donor surfaces and to the fluid.

The following illustration shows the effect of fluid velocity on film temperature and indicates the importance of this heater design requirement.

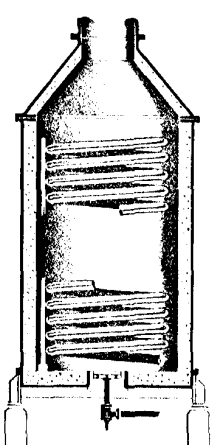

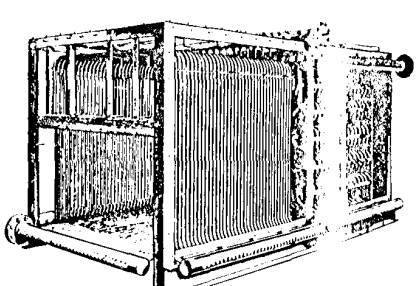

0407352

TOWOLDMON0030939

EFFECT OF LIQUID VELOCITY ON FILM TEMPERATURE DURING HEATING

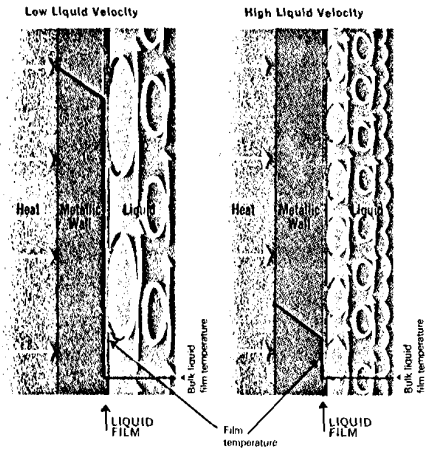

In electrical immersion heaters, all the heat delivered by the elements passes into the fluid. The watt-density on the surface of the heat donor and the fluid velocity over it should be in proper balance to avoid excessive film temperatures. Watt-densities in the range of 8 to 10 watts/sq.in. with a minimum velocity of 4 feet/second are a practical relation. Electrical heaters are available with 18 to 22 watts/sq. in. densities that have proved satisfactory with much lower fluid velocities. With such low velocity heaters, however, the fluid selected should have a bulk operating temperature approximately 35°F higher than the maximum intended use temperature.

In general, Therminol fluids will give long service life if the maximum bulk temperature does not exceed the recommended maximum bulk operating temperature for the particular fluid. When selecting a heater, it is essential that the design and capacity does not develop maximum film temperatures that exceed the ceiling for the fluid — and the pumping capacity should be sufficient to maintain adequate fluid velocity over the heat donor surfaces.

Film Temperatures

Since heating is not uniform in fired heaters, the **maximum heat stress conditions** must be used to determine what film temperatures will be encountered.

Example: (for a typical heater)

The film coefficient for fluid is:	250 BTU/hr. sq. ft. °F
The bulk fluid operating temperature is:	570°F
The *average* radiant absorption rate is:	9,000 BTU/sq. ft. hr.
The *maximum* radiant absorption rate is:	17,000 BTU/sq. ft. hr.

$$\text{Average Film Temperature} = 570° + \frac{9{,}000}{250} = 606°F$$

$$\text{Maximum Film Temperature} = 570° + \frac{17{,}000}{250} = 638°F$$

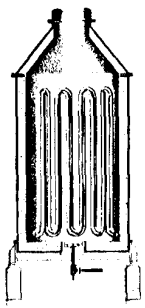

0407353

TOWOLDMON0030940

Determination of heat transfer coefficients

To determine overall heat transfer coefficients for the heating system, individual coefficients have to be calculated for heat donor side and the fluid service side at each user station. Film coefficients for Therminol fluids are best calculated using a Seider & Tate type* equation:

$$\frac{hD}{k} = 0.022 \left[\frac{(DG)}{\mu}\right]_b^{0.8} \left[\frac{c_p\mu}{k}\right]_b^{0.4} \left[\frac{\mu_b}{\mu_w}\right]^{0.16}$$

$\frac{DG}{\mu}$ = Reynolds Number (dimensionless)

$\frac{c_p\mu}{k}$ = Prandtl Number (dimensionless)

$\frac{hD}{k}$ = Nusselt Number (dimensionless)

$\frac{\mu_b}{\mu_w}$ = Viscosity Correction Factor

In this equation:

- h = The Therminol fluid's film heat transfer coefficient
- D = Internal pipe diameter
- k = Thermal conductivity of the Therminol fluid at bulk temperature "b"
- G = Mass velocity of the Therminol fluid
- c_p = Specific heat of Therminol at bulk temperature "b"
- μ = Absolute viscosity of Therminol
- μ_b = The Therminol fluid's viscosity at bulk temperature "b"
- μ_w = The Therminol fluid's viscosity at wall (film) temperature "w"
- b = Bulk fluid temperature

*A modification of the Seider & Tate equation for all liquids except water. Graphical data on Therminol film coefficients are given in each fluid's data sheet. Tabulated data is available on request.

Pumps

Pumps must have sufficient capacity and pressure head to circulate the fluid at the rate required by the particular installation. For large flow rates, the pump should generally be of the centrifugal type; any one of a number of the standard brands of high temperature pumps is suitable. For most systems, cast steel pumps are best. Pump manufacturers usually specify that above 450°F (230°C) a water-jacketed, deep stuffing box or a mechanical seal and water-cooled bearings should be used. Mechanical seals are used widely today. On pumps with a stuffing box, at least five rings of packings should be provided, with graphite-impregnated metal foil around an asbestos core or laminar graphite rings such as Grafoil.*

When a new system is first put into operation, a slight leakage may be noticed at the pump packing. The pump gland should not be tightened however, until the system has heated up to close to the temperature of operation. Canned (glandless) pumps require no seal and have proved very serviceable in *Therminol* systems.

Regardless of the type of pump selected, the flow rate should be checked regularly against the pump's performance when new. To avoid shaft trouble and seal leakage, it is important to avoid pipe support stresses on the body of the pump. Each pump should be fitted with a control device to switch off the burner in case of pump failure.

If expansion loops are used in the pump section piping, they should be horizontal or vertically downward. Loops should not be vertically upwards, because this forms a trap which can collect air and vapor which seriously hamper the pump performance.

Carbonaceous deposits can also occur at the pump seal face due to leakage at high temperatures. The use of a seal flush system is helpful in preventing excessive seal wear.

Filters

In a new system, install a wire mesh strainer in the pump section.

When operating where solids and contaminants might enter the system, it is advisable to permanently install a high temperature filter by-pass line that can be isolated with valves for periodic cleaning.

*Product of Union Carbide Co.

0407354

TOWOLDMON0030941

Materials of construction
(excluding heater coils)

The majority of metals normally encountered in high temperature heating systems can be used with *Therminol* fluids.

Materials of construction are generally selected on the basis of their suitability for operation at the specified maximum temperature. Mild steel is widely used.

The use of copper, aluminum, bronze and brass alloys etc. should be kept to a minimum mainly because of their loss of metallurgical strength at higher temperatures.

The expansion tank and venting arrangements

The expansion tank should be installed at the highest point in the system and connected to the suction side of the pumps. It should serve as the main venting point of the system.

The double drop leg expansion tank (see Figures a and b on page 10) provides greater flexibility of operation than a single leg tank. Venting of incondensibles, water, etc. is often difficult in a heating system. Purging out air on start-up can also be a problem. This particular arrangement ensures flooded pump suction and uninterrupted flow on start-up and allows venting as required.

It is preferable when designing the expansion tank to minimize air contact with fluid at temperatures exceeding 100°F (40°C) to prevent oxidation.

The most effective way of preventing fluid oxidation is to blanket the system with an inert gas (such as nitrogen) as shown in Fig. a. If this is not desirable, air contact can be minimized by a cold seal trap arrangement as shown in Fig. b. Low boilers and moisture can collect in the cold seal trap and the fluid in the trap should be discarded periodically.

Some systems operate without an allowance being made for oxidation protection of the fluid in the tank. In this case, the temperature in the expansion tank should be kept as low as possible in order to minimize problems which could result from fluid oxidation.

These guidelines are given to maximize fluid life which is particularly important in the case of the higher cost fluids. When using a nitrogen blanket, moisture should be driven off from the fluid before the gas pressure is set. Any vent lines should be led outside of the building so that vapors do not enter the working area.

The expansion tank should be sized so that it is ¼ full when the system is at room temperature and ¾ full when the system is at operating temperature. It should be fitted with a sight glass at the full range and with a float operated, minimum level switch to shut off the heater in the event of accidental fluid loss.

Pipework

The most important factors in the piping layout for *Therminol* systems are: (A) Proper sizing for the required flow rate and (B) minimizing pressure drop. Because the system will undergo temperature changes, adequate loops to relieve expansion and contraction stress are essential. Schedule 40 seamless carbon steel pipe should be used throughout the system. It is characteristic of most organic heat transfer fluids (including *Therminol*) to have a tendency to leak through joints and fittings at high temperatures unless these fittings are very tight. The best way to prevent piping leakage is to weld all connections. Where access is necessary, use raised-face flanges with appropriate gasketing and high-temperature bolting. Control of piping leaks is especially important, since fluid-soaked insulation poses a more serious hazard than the leaking fluid, itself. (See Section on Insulation).

When a flanged connection is made, USAS 300 lb. weldneck or equivalent raised-face flanges are recommended. The flanges should be back welded to the pipe and proper gasketing used, such as spiral wound asbestos and stainless steel gasket. Recommended flange gasketing for high temperature heat transfer fluid systems should be spiral-wound type conforming to API specification 601. Standard materials for spiral wound flange gaskets are Type 304 stainless steel and asbestos.

Important to non-leak performance with spiral wound gaskets is the use of raised-face flanges, alloy steel bolting and even compression of gasket during bolt pull up.

0407355

TOWOLDMON0030942

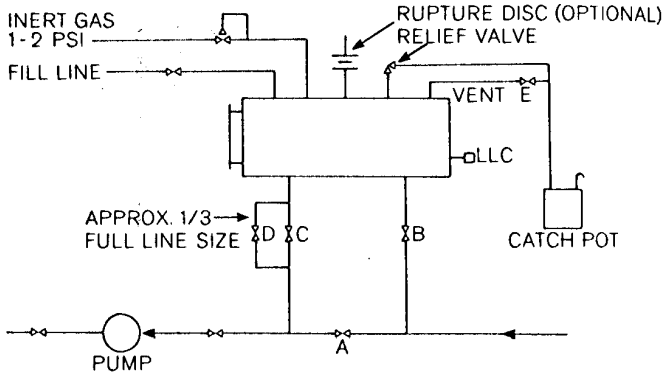

Figure a **Suggested Inert Gas Arrangement for Expansion Tank**

For startup or venting operations, valves B, C, D. & E are opened and Valve A is closed. All flow passes to expansion tank; degasses; vents; and maintains flooded pump suction.

For normal operation, valves B, C and E are closed and valves A & D are open. This arrangement provides normal return flow to pump suction with open static head line from tank to pump. Bypass line through valve D eliminates thermal siphon to expansion tank.

Figure b **Suggested Cold Seal Trap Arrangement for Expansion Tank**

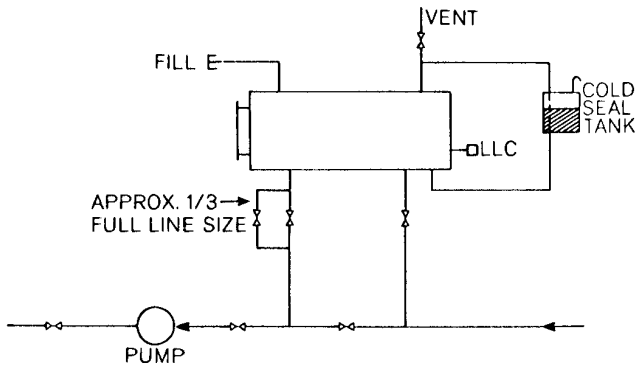

0407356

TOWOLDMON0030943

Insulation

Organic heat transfer fluids such as *Therminol* exhibit a slow oxidation reaction with the air trapped inside the voids of the insulating material when system temperatures reach about 260 °C. (500 °F). Saturated insulation offers a large fuel surface in the face of poor heat dissipation conditions, and this, along with possible catalysis from the insulating material (magnesia, silicate-bonded asbestos or calcium silicate) can cause a temperature build-up in the mass. This temperature build-up can result in ignition of the fluid when the space between the piping and the saturated insulation is exposed to air (i. e., should the insulation be broken for repair, etc.).

This phenomenon is not fully understood, but appears to occur less with closed cell insulation than with the insulating materials mentioned above. Closed cell materials, then, are preferred, especially where leakage is a possibility despite all precautions.

The principle problem areas are near instrument connections, valve packing glands, flanges, and where cracks develop in relatively impermeable insulation cement adjacent to oil soaked insulation.

To obviate this problem, eliminate any source of leakage promtly. Replace leaky gaskets, oil soaked insulation, and re-pack valve stems. Cover insulation where leaks might occur with a hydraulic setting, oil-resistant cement. Install valves, where possible, with the stems in a horizontal position so that leaks will drip away from the insulation. And again, use closed cell insulating materials on suspect piping areas.

Packing

Various types of packing are used to seal valve stems and small pump shafts on high temperature *Therminol* systems. Flexible metal or solid graphite packings give the best service.

Graphite or Teflon impregnated, short fibre asbestos gasketing is used also, but leak-free service is not always achieved at the higher temperatures.

Generally, five rings of packing are specified on valve stems to assure a reasonable seal.

The use of metal bellows steam seals on valves is increasing and would, of course, provide absolutely leak-free service.

Valves

Cast steel valves with deep stuffing boxes are satisfactory for *Therminol* systems. If it is possible, globe valves with an outside screw (as a protection against high temperatures) should be used throughout the system since they provide the only truly effective seal against *Therminol* fluids. Gate valves do not always provide a tight shut-off.

Controls

Controls for heating systems using *Therminol* should be installed both on the heater itself and on the heat-using units. A wide variety of thermal-operating controls are available, and any reliable standard equipment is satisfactory.

Install heater controls to regulate the firing mechanism in direct proportion to the required output. These controls should increase or decrease the heat in-put to maintain the *Therminol* at the operating temperature required by the heat-demand of the user. Small units may be operated satisfactorily by relatively simple "on-off" or "high-low" controllers; larger units will operate more uniformly if equipped with modulating temperature controls.

Install user controls to regulate the flow of the heat transfer fluid in proportion to the heat-consumption of the heat-using equipment. In a multiple-user system, separate controls should be installed on each consuming unit, to assure the proper heat-delivery.

0407357

TOWOLDMON0030944

Fire protection

Generally speaking, where fire protection is concerned, it is best to consult your insurance company for guidance and counsel. Likewise, you will want to discuss your fire safety equipement requirements with qualified suppliers of fire protection equipment. Selection and sizing of fire protection equipment is important to safeguard the installation.

A commonly used method of preventing fire in the event of tube rupture in fired heaters is piping steam or CO_2 as a snuffer into the combustion chamber of the heater. Usually a properly-sized line with a remote manual valve for activation is the preferred arrangement. This snuffer system can be automated by the use of an exhaust stack temperature switch. This switch would then energize a solenoid valve and alarm upon excessive temperature rise, automatically flooding the chamber with a fire extinguishing agent.

In practice the temperature switch is often set about 40 °C (100 °F) over the normal exhaust temperature to prevent nuisance shutdowns. Where steam snuffer systems are used, it is a good idea to employ a steam trap to avoid slugging the combustion chamber with water when the system activates, or is activated manually.

Safety controls

In addition to activating controls, the system must also be fitted with the proper safety devices to meet the local code requirements. Safety controls should include:

(A) **High temperature cutoff at the heater outlet** . . . to shut off the burner in the event of an excessive temperature rise.

(B) **Heater low flow cutoff** . . . to shut down the burner, should flow rate drop below design rates, or if a loss of flow occurs due to pump malfunction or failure.

Burners should be equipped with regular automatic ignition controls and flame failure controls. In wide-range firing, an over-fire draft control will save heat losses. Electric power failure and instrument air failure safety controls are also desirable. In general, a policy of "fail-safe" instrumentation and control in the designing is essential, using good quality indicating – and recording gauges, with accurate-reading scales calibrated for the particular limits of operation.

(C) **Expansion tank low level switch** . . . to shut off the heater in the event of accidental fluid loss.

0407358

TOWOLDMON0030945

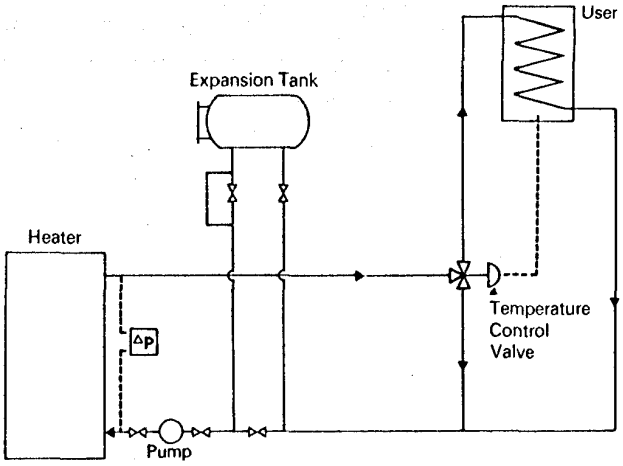

system 1
the basic system

The transfer of process heat as a liquid offers these benefits to the installation:

- Precise heating levels
- Closer temperature control at each user station
- Minimum cost installations
- Greater operating safety
- Low maintenance costs

Therminol systems are characterized by their extreme flexibility. A single heater can serve multiple "users" operating at the same or different temperature levels. The systems can be devised to deliver and to remove heat. Since the heat transfer is done with a liquid, there are no problems of condensation, pressure drop, and great heat surges.

The following diagrams illustrate the basic features of the heater off-take connections and the various arrangements of heat users that can be operated on ***Therminol*** fluids.

This is the basic system configuration with a single user operating at heater outlet temperature. Note: The 3-way valve diverts the unused ***Therminol*** directly back to the heater. This assures that a minimum flow will be maintained through the heater at all times. This also controls user temperature by regulating the flow of hot ***Therminol***. This system has maximum temperature flexibility.

User temperature may also be controlled by regulating the fuel supply to the heater. This method has a very limited turndown and should only be used with a continuous process with small load changes. Again, a minimum flow of ***Therminol*** must be maintained in the heater at all times.

0407359

TOWOLDMON0030946

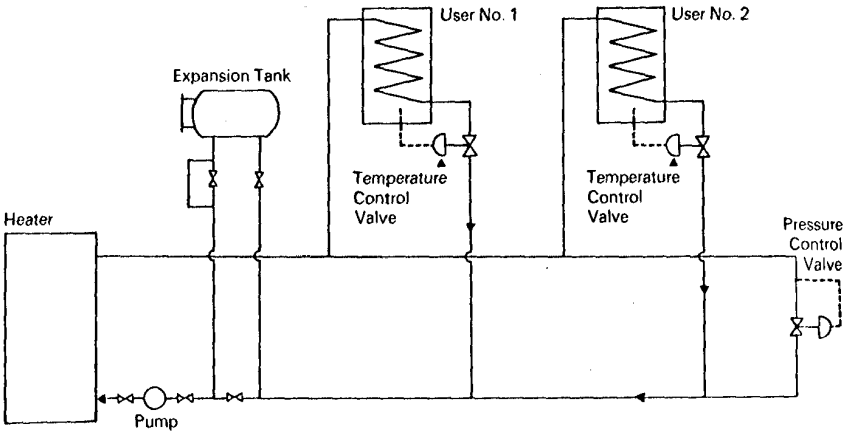

system 2
Heating multiple users

The same system as No. 1 except several heat users are connected to the heater, all operating at the same temperature. To control temperature each user has a modulating control valve. A single minimum flow by-pass valve is used at the end of the piping loop.

An alternate method is to use a 3-way valve at every user. This usually costs more and requires additional piping. There is also a danger of starving the other users when one user is in complete by-pass.

0407360

TOWOLDMON0030947

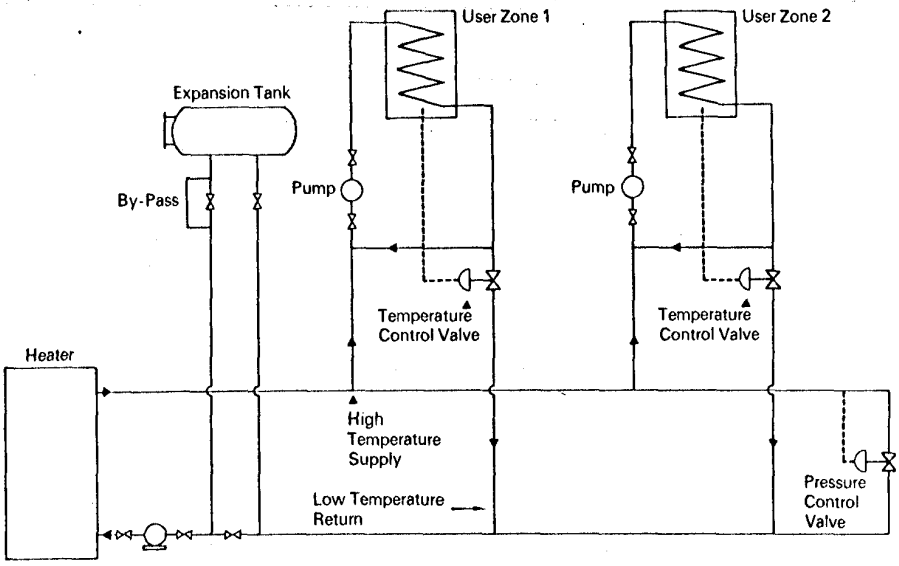

system 3

Heating several users at different temperatures

With this arrangement several heat users at different temperatures may be operated at one time. Each temperature zone has its own recirculating pump located at the user inlet with the temperature control valve located down stream of the user. A by-pass from the zone pump inlet is connected to the user outlet. When the temperature control valve is opened fresh high temperature *Therminol* is admitted to the zone where it is mixed and recirculated. This blending of hot and cold *Therminol* gives precise temperature control at some temperature below heater outlet temperature.

This same principle can be used with System No. 1 when the user has a very large fluid volume and small heat load. The main recirculating pump is sized for the heat load through the heater; while the zone pump is sized to recirculate a larger volume of blended *Therminol* through the user.

Both of these arrangements will give excellent temperature control as well as a fast response to system change.

0407361

TOWOLDMON0030948

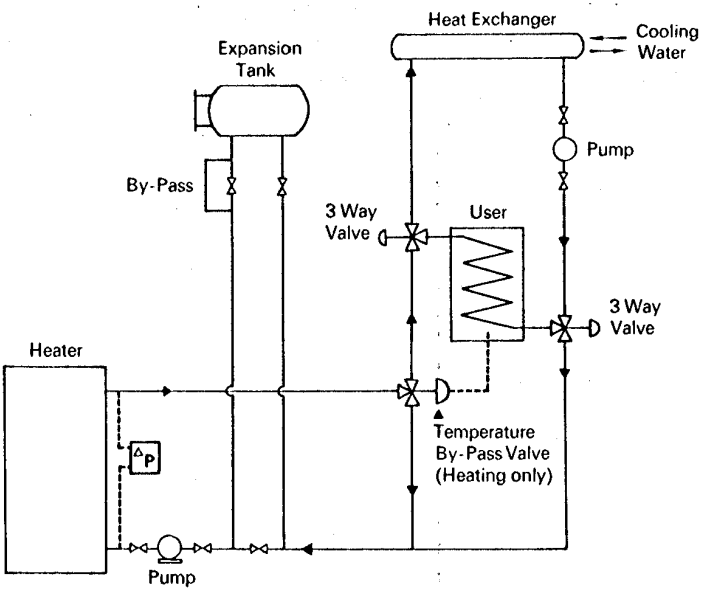

system 4

Heating and cooling of a single user

This is a dual system for heating and cooling. For heating the user is connected in a similar way to the arrangement in System 1, with the exception of the two additional 3-way valves. These valves are used to establish two separate circulating systems with a common user. The zone pump is used on the cold side only. This arrangement operates with a minimum of interchange between the hot and cold *Therminol* at cycle changeover.

Uses for this system are:

Batch type kettles to reduce turn around time. Start-up of an exothermic reaction, followed by reaction temperature control.

0407362

TOWOLDMON0030949

Suggested start-up procedure for new systems

For a new system or one that returns to service after draining, the following check points are recommended as guides. They are supplemental to the heater manufacturers' and the heat-user processing equipment makers' recommendations and apply generally to the care of the fluid in all sizes and types of systems:

1. Check Safety and Control Devices

. . . for proper installation and functioning, making sure that the range settings are proper for the operation. Manually activate the instruments and apply all tests necessary to assure proper functioning. For protection of the system and for the expected long service life of the fluid it is vitally important that all instruments and controls function properly.

2. Check for leakage

3. Remove moisture from the system, using dry compressed air.

4. Fill the System with *Therminol*

A Fill the expansion tank with *Therminol*, and introduce the fluid slowly into the system through the expansion tank valve until the tank is almost empty. Close the valve and again fill the tank. Open the valve allowing the fluid to enter the system and repeat until it no longer flows by gravity.

B Open all valves then start the main circulating pump in accordance with the manufacturer's recommendations. Observe the liquid level in the expansion tank, refilling as necessary until the system has been filled. Allow for the thermal expansion of *Therminol* in determining the cold charge level. The expansion tank should be adjusted to 70– 75% full when the hot operating temperature is reached.

C Circulate the *Therminol* fluid through the system for about 3 to 4 hours to eliminate air pockets and to assure complete fill of the system.

Before firing heater, be sure that *Therminol* is circulating freely.

5. Start the Heater

A Bring the system up to temperature slowly – about 35 °C (95 °F) per hour. This will prevent thermal shock to heater tubes, tube/heater joints, refractory materials, etc. . . . and allow operators to check the functioning of instruments and controls. The slow heat-up will also allow any moisture trapped in the system to escape as a vapour.

B Bring System to operating temperature and put the "users" on the line.

C The fluid is generally analysed within 24 hours of plant start-up and every 3 months during the first year of operation.

D Check the filter. As foreign material collects, the filter should be periodically removed and cleaned. After several days of operation with no foreign material on the screen – it may be permanently removed. The system should be heated and cooled for at least two cycles with the screen in place since the resulting expansion and contraction will loosen mill scale.

TOWOLDMON0030950

Suggested operating instructions for liquid phase heating systems using Therminol fluids

The following operating suggestions are not intended to supersede or preclude those operating instructions provided by a heater or system supplier.

1. Check Safety Controls

In addition to activating controls, the heater should also be fitted with the proper safety controls to meet local code requirements.

2. Start-Up Temperature Precautions

a) Temperature of fluid at start-up is important: Consult your heater or pump supplier for the minimum recommended start-up temperature. This should correspond with the maximum permitted fluid viscosity. Failure to comply with their recommendations may lead to equipment damage.

b) If you have to start-up at low temperatures (below those specified), the fluid should be heated in a safe way, for example with electric tapes etc. ...

c) One way of avoiding start-up temperature problems is to keep the system idling at 105 °C (221°F) - especially in cold weather.

3. Procedure for Start-Up (cold fluid)

a) When the start-up temperature is O.K., start the circulating pump and check the expansion tank level to see that the *Therminol* is at the proper cold-start level (¼ full).

b) Start burner at the "low" flame setting and continue full circulation until the *Therminol* bulk temperature reaches 105 °C (221°F).

c) Turn heater to full heat.

4. Procedure for Start-Up (hot fluid)

Start-up after an automatic shut-down by the safety controls – (fluid should still be above 105 °C (221°F).

a) Run the circulating pump for ten minutes or so to eliminate any vapor pockets formed when the fluid has remained static in the heater.

b) When flame is stabilized, the heater can be turned to full fire.

5. Procedure for shut-down

a) Shut off burner completely with circulating pump still operating. Continue to run the pump at full capacity for at least one hour to dissipate residual heat in the heater.

0407364

TOWOLDMON0030951

b) Shut off circulating pump after one hour and switch off all heater electrical controls.

6. Planned maintenance

Regular maintenance inspection schedules should include the manufacturers' recommendations for the heater and the components as well as inspection of the *Therminol* fluid. The following is a list of inspection check points:

a) Lubrication of moving parts
b) Operating fidelity and the accuracy of the readings of safety controls and temperature limit controls.
c) Inspection of heater tubes, burner, refractory linings.
d) Periodic inspection of heater service.
e) Inspection of the water cooling at the circulating pump.
f) Re-packing of stuffing boxes (according to the manufacturers specification).
g) Inspection of the expansion tank venting system.
h) The fluid should be analysed within 24 hours of plant start-up and every three months during the first year of operation. Afterwards, six-month checks are usually sufficient. Monsanto provides analytical procedures for sample testing and will advise on request the corrective action required should results be outside acceptable values for used fluid.



Safe handling and disposal

Both animal toxicity studies and manufacturing experience indicate that no special precautions are required in the handling of these products at ambient temperatures. However, it is suggested that good industrial practice relating to the avoidance of repeated and prolonged skin contact to any industrial chemical, heat transfer fluids, or petroleum product be followed. Vapors on the other hand while not dangerously toxic normally can give rise to discomfort; systems should be made as leak tight as possible.

Repairs to leaks of hot fluid should be carried out under well ventilated conditions.

More data is available on each product if required.

While it is believed that *Therminol* heat transfer fluids pose no serious problems with respect to the environment, as a concerned supplier to industry, Monsanto urges the user to maintain a tight system, to correct leakage promptly, and to excercise care in the handling and disposal of this and all other such products. A tight maintenance program not only protects the environment, but keeps employes comfortable, the working area clean and the system running smoothly.

Important caution

Heat transfer fluids are intended only for **indirect** heating purposes. Under no circumstances should *Therminol* heat transfer fluids contact or in any way contaminate food, animal feed, food products, food packaging materials, pharmaceuticals or any items which may directly or indirectly be ultimately ingested by humans. Any contact may contaminate these items to the extent that their destruction may be required. Precautions against ignitions and fires should be taken with these products.

0407365

TOWOLDMON0030952

Resistance of valves and fittings to flow of fluids

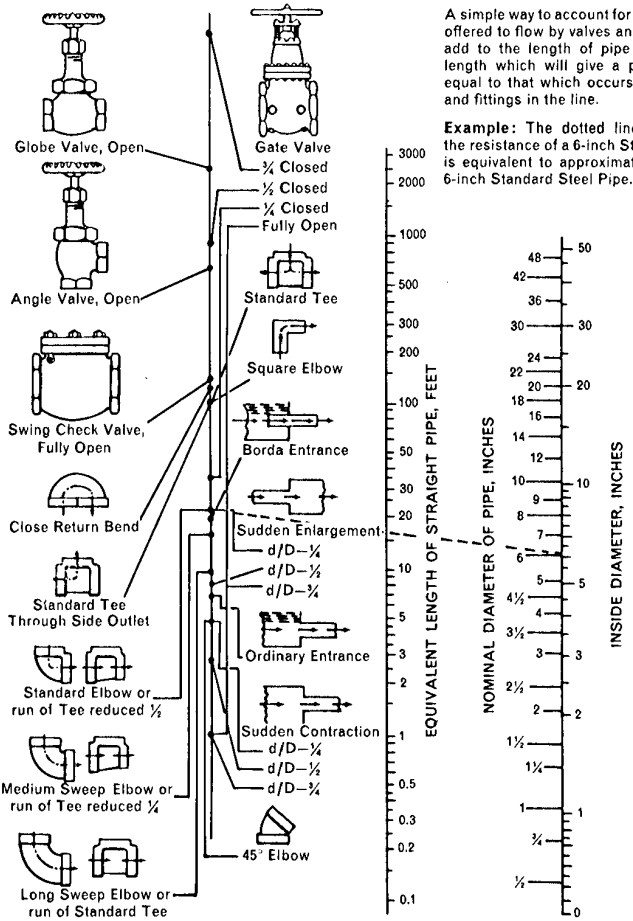

A simple way to account for the resistance offered to flow by valves and fittings is to add to the length of pipe in the line a length which will give a pressure drop equal to that which occurs in the valves and fittings in the line.

Example: The dotted line shows that the resistance of a 6-inch Standard Elbow is equivalent to approximately 16 feet of 6-inch Standard Steel Pipe.

0407366

TOWOLDMON0030953

Steel pipe dimensions—capacities and weights*

Nominal Pipe Size, in.	Outside Diam., in.	Schedule No.	Wall Thickness, in.	Inside Diam., in.	Cross-Sectional Area Metal, sq. in.	Inside Sectional Area, sq. ft.	Circumference, ft., or Surface sq. ft. per ft. of Length		Capacity at 1 ft. Per Sec. Velocity		Weight of Pipe Per Ft., Lb
							Outside	Inside	U. S. Gal. Per Min.	Lb. Per Hr. Water	
⅛	0.405	40	0.068	0.269	0.072	0.00040	0.106	0.075	0.179	89.5	0.25
		80	.095	.215	.093	.00025	.106	.0563	.112	56.0	.32
¼	0.540	40	.088	.364	.125	.00072	.141	.0954	.323	161.5	.43
		80	.119	.302	.157	.00050	.141	.0792	.224	112.0	.54
⅜	0.675	40	.091	.493	.167	.00133	.177	.1293	.596	298.0	.57
		80	.126	.423	.217	.00098	.177	.1110	.440	220.0	.74
½	0.840	40	.109	.622	.250	.00211	.220	.1630	.945	472.5	.85
		80	.147	.546	.320	.00163	.220	.1430	.730	365.0	1.09
		160	.187	.466	.384	.00118	.220	.1220	.529	264.5	1.31
¾	1.050	40	.113	.824	.333	.00371	.275	.2158	1.665	832.5	1.13
		80	.154	.742	.433	.00300	.275	.1942	1.345	672.5	1.48
		160	.218	.614	.570	.00206	.275	.1610	0.924	462.0	1.94
1	1.315	40	.133	1.049	.494	.00600	.344	.2745	2.690	1,345.0	1.68
		80	.179	0.957	.639	.00499	.344	.2505	2.240	1,120.0	2.17
		160	.250	0.815	.837	.00362	.344	.2135	1.625	812.5	2.85
1¼	1.660	40	.140	1.380	.669	.01040	.435	.362	4.57	2,285.0	2.28
		80	.191	1.278	.881	.00891	.435	.335	3.99	1,995.0	3.00
		160	.250	1.160	1.107	.00734	.435	.304	3.29	1,645.0	3.77
1½	1.900	40	.145	1.610	0.799	.01414	.498	.422	6.34	3,170.0	2.72
		80	.200	1.500	1.068	.01225	.498	.393	5.49	2,745.0	3.64
		160	.281	1.338	1.429	.00976	.498	.350	4.38	2,190.0	4.86
2	2.375	40	.154	2.067	1.075	.02330	.622	.542	10.45	5,225.0	3.66
		80	.218	1.939	1.477	.02050	.622	.508	9.20	4,600.0	5.03
		160	.343	1.689	2.190	.01556	.622	.442	6.97	3,485.0	7.45
2½	2.875	40	.203	2.469	1.704	.03322	.753	.647	14.92	7,460.0	5.80
		80	.276	2.323	2.254	.02942	.753	.609	13.20	6,600.0	7.67
		160	.375	2.125	2.945	.02463	.753	.557	11.07	5,535.0	10.0
3	3.500	40	.216	3.068	2.228	.05130	.917	.804	23.00	11,500.0	7.58
		80	.300	2.900	3.016	.04587	.917	.760	20.55	10,275.0	10.3
		160	.437	2.626	4.205	.03761	.917	.688	16.90	8,450.0	14.3
3½	4.000	40	.226	3.548	2.680	.06870	1.047	.930	30.80	15,400.0	9.11
		80	.318	3.364	3.678	.06170	1.047	.882	27.70	13,850.0	12.5
4	4.500	40	.237	4.026	3.173	.08840	1.178	1.055	39.6	19,800.0	10.8
		80	.337	3.826	4.407	.07986	1.178	1.002	35.8	17,900.0	15.0
		120	.437	3.626	5.578	.07170	1.178	0.950	32.2	16,100.0	19.0
		160	.531	3.438	6.621	.06447	1.178	0.901	28.9	14,450.0	22.6
5	5.563	40	.258	5.047	4.304	.1390	1.456	1.322	62.3	31,150.0	14.7
		80	.375	4.813	6.112	.1263	1.456	1.263	57.7	28,850.0	20.8
		120	.500	4.563	7.953	.1136	1.456	1.197	51.0	25,500.0	27.1
		160	.625	4.313	9.696	.1015	1.456	1.132	45.5	22,750.0	33.0
6	6.625	40	.280	6.065	5.584	.2006	1.734	1.590	90.0	45,000.0	19.0
		80	.432	5.761	8.405	.1810	1.734	1.510	81.1	40,500.0	28.6
		120	.562	5.501	10.71	.1650	1.734	1.445	73.9	36,950.0	36.4
		160	.718	5.189	13.32	.1469	1.734	1.360	65.8	32,900.0	45.3
8	8.625	20	.250	8.125	6.570	.3601	2.258	2.130	161.5	80,750.0	22.4
		30	.277	8.071	7.260	.3553	2.258	2.115	159.4	79,700.0	24.7
		40	.322	7.981	8.396	.3474	2.258	2.090	155.7	77,850.0	28.6
		60	.406	7.813	10.48	.3329	2.258	2.050	149.4	74,700.0	35.7
		80	.500	7.625	12.76	.3171	2.258	2.000	142.3	71,150.0	43.4
		100	.593	7.439	14.96	.3018	2.258	1.947	135.3	67,650.0	50.9
		120	.718	7.189	17.84	.2819	2.258	1.883	126.5	63,250.0	60.7
		140	.812	7.001	19.93	.2673	2.258	1.835	120.0	60,000.0	67.8
		160	.906	6.813	21.97	.2532	2.258	1.787	113.5	56,750.0	74.7

* Based on A.S.A. Standards B36.10.

0407367

TOWOLDMON0030954

Average properties of tubes

DIAMETER		THICKNESS		EXTERNAL				INTERNAL			
								VOLUME OR CAPACITY PER LINEAL FOOT			
External Inches	Internal Inches	BWG Gauge	NOM Wall	Circumference Inches	Surface Per Lineal Foot Square Feet	Lineal Feet of Tube Per Square Foot of Surface	Transverse Area Square Inches	Cubic Inches	Cubic Feet Also Area in Square Feet	United States Gallons	Length of Tube Containing One Cubic Foot
	0.527	18	0.049	1.9635	0.1636	6.1115	0.218	2.616	0.0015	0.011	661
⅜	0.495	16	0.065				0.193	2.316	0.0013	0.010	746
	0.459	14	0.083				0.166	1.992	0.0011	0.009	867
	0.652	18	0.049	2.3562	0.1963	5.0930	0.334	4.008	0.0023	0.017	431
½	0.620	16	0.065				0.302	3.624	0.0021	0.016	477
	0.584	14	0.083				0.268	3.216	0.0019	0.014	537
	0.560	13	0.095				0.246	2.952	0.0017	0.013	585
	0.902	18	0.049	3.1416	0.2618	3.8197	0.639	7.668	0.0044	0.033	225
1	0.870	16	0.065				0.595	7.140	0.0041	0.031	242
	0.834	14	0.083				0.546	6.552	0.0038	0.028	264
	0.810	13	0.095				0.515	6.180	0.0036	0.027	280
	1.152	18	0.049	3.9270	0.3272	3.0558	1.075	12.90	0.0075	0.056	134
	1.120	16	0.065				0.985	11.82	0.0068	0.051	146
1¼	1.084	14	0.083				0.923	11.08	0.0064	0.048	156
	1.060	13	0.095				0.882	10.58	0.0061	0.046	163
	1.032	12	0.109				0.836	10.03	0.0058	0.043	172
	1.402	18	0.049	4.7124	0.3927	2.5465	1.544	18.53	0.0107	0.080	93
	1.370	16	0.065				1.474	17.69	0.0102	0.076	98
1½	1.334	14	0.083				1.398	16.78	0.0097	0.073	103
	1.310	13	0.095				1.343	16.12	0.0093	0.070	107
	1.282	12	0.109				1.292	15.50	0.0090	0.067	111
	1.620	16	0.065	5.4978	0.4581	2.1827	2.061	24.73	0.0143	0.107	70
	1.584	14	0.083				1.971	23.65	0.0137	0.102	73
1¾	1.560	13	0.095				1.911	22.94	0.0133	0.099	75
	1.532	12	0.109				1.843	22.12	0.0128	0.096	78
	1.490	11	0.120				1.744	20.92	0.0121	0.090	83
	1.870	16	0.065	6.2832	0.5236	1.9099	2.746	32.96	0.0191	0.143	52
	1.834	14	0.083				2.642	31.70	0.0183	0.137	55
2	1.810	13	0.095				2.573	30.88	0.0179	0.134	56
	1.782	12	0.109				2.489	29.87	0.0173	0.129	58
	1.760	11	0.120				2.433	29.20	0.0169	0.126	59

0407368

TOWOLDMON0030955

Engineering conversion factors

Multiply	By	To Obtain
atmospheres	14.70	lb./sq. in.
atmospheres	760	mm. Hg.
atmospheres	29.92	in. Hg.
atmospheres	33.90	ft. of water
British thermal units	3.930×10^{-4}	hp. hr.
British thermal units	2.930×10^{-4}	kw. hr.
Btu/hr.	3.927×10^{-4}	hp.
Btu/(hr. sq. ft. ° F.)	1.356×10^{-4}	gram-cal./sec. cm.² ° C.
Btu/hr. sq. ft. ° F.)	2.035×10^{-3}	watts/sq. in. ° F.
(Btu/hr. sq. ft.)/(° F./in.)	3.445×10^{-4}	(gram-cal/sec. cm.²)/(° C./cm.)
(Btu/hr. sq. ft.)/(° F./ft.)	0.0173	(watts/cm.²)/-(° C./cm.)
(Btu/hr. sq. ft.)/(° F./ft.)	14.88	(gram-cal./hr. cm.²)/(° C./cm.)
Btu/lb. ° F.	1.0	gram-cal./gram ° C.
Btu/sec.	778.2	ft. lb./sec.
Btu/sec.	1.4147	hp.
Btu/sec.	1.0549	kw.
Btu/sec.	107.6	kg.-meter/sec.
Btu/sq. ft.	0.2712	gram-cal./cm.²
Btu/sq. ft.	2.712	kg.-cal./sq. meter
centimeters	0.3937	in.
centimeters	0.0328	ft.
cm. Hg.	0.01316	atm.
cm. Hg.	0.1934	lb./sq. in.
cm. Hg.	27.85	lb./sq. ft.
cm. Hg.	136.0	kg./sq. meter
cm. Hg.	5.353	in. of water
cm. Hg.	0.4461	ft. of water
cm./° C.	0.2187	in./° F.
cm./sec.	1.969	ft./min.
cm./sec.	0.03281	ft./sec.
cm./sec.	0.036	km./hr.
cm./sec.	0.60	meters/min.
cm./sec.	0.02237	mph
centipoises	2.42	lb./ft. hr.
cubic centimeters	0.06102	cu. in.
cubic centimeters	3.531×10^{-5}	cu. ft.
cubic centimeters	2.642×10^{-4}	gal.
cm.³/sec.	2.119×10^{-3}	cu. ft./min.
cm.³/sec.	0.0864	cu. meter/day
cm.³/sec.	0.01585	gal./min.
cm.³/sec.	3.6	liter/hr.
cm.³/gram	0.01602	cu. ft./lb.
cm.³/gram mol.	0.01602	cu. ft./lb. mol.
cubic feet	7.481	gal.
cubic feet	28.32	liters
cubic feet	62.43	lb. of water
ft. of water	62.43	lb./sq. ft.
ft. of water	0.4335	lb./sq. in.
ft./min.	0.508	cm./sec.
gallons (imperial)	1.201	gal. (U.S.)
gal. (U.S.)	231	cu. in.
gal. (U.S.)	3785	cm.³
gal. (U.S.)	3.785	liters
gal./hr.	3.71×10^{-5}	cu. ft./sec.
gal./min.	2.228×10^{-3}	cu. ft./sec.
gal./min.	0.227	cu. meters/hr.
gal./min.	0.06309	liters/sec.
gal./min. of water	500.8	lb./hr. of water
grams	2.205×10^{-3}	lb.
gram-cal.	3.968×10^{-3}	Btu
gram-cal./gram	1.8	Btu/lb.
gram-cal./gram mol.	1.8	Btu/lb. mol.

Multiply	By	To Obtain
gram-cal./gram ° C.	1.0	Btu/lb. ° F.
(gram-cal./sec. cm.²)/(° C./cm.)	2.903×10^{3}	(Btu/hr. sq. ft.)/-(° F./in.)
hp. (boiler)	3.3479×10^{4}	Btu/hr.
hp. (boiler)	9.804	kw.
hp. hr.	2.545×10^{3}	Btu
hp. hr.	0.7457	kw. hr.
inches	2.54	cm.
in. Hg.	0.03342	atm.
in. Hg.	1.133	ft. of water
in. Hg.	0.4912	lb./sq. in.
in. of water	2.458×10^{-3}	atm.
in. of water	0.07355	in. Hg.
kg./cu. meter	0.06243	lb./cu. ft.
kilowatts	1.341	hp.
kw. hr.	3.413×10^{3}	Btu
kw. hr.	1.341	hp. hr.
liters	0.2642	gal. (U.S.)
liters	1.057	qt. (liq.)
liters/min.	15.851	gal./hr.
meters	3.281	ft.
meters	39.37	in.
meters/sec.	196.8	ft./min.
meters/sec.	2.237	mph
ounces	28.35	grams
poises	1	gram/cm. sec.
pounds	453.6	grams
lb. of water	0.01602	cu. ft.
lb. of water	0.1198	gal.
lb./ft. hr.	0.413	centipoises
lb./gal.	0.1198	grams/cm.³
lb./sq. ft.	0.01602	ft. of water
lb./sq. ft.	4.882	kg./sq. meter
lb./sq. in.	0.06804	atm.
lb./sq. in.	2.307	ft. of water
lb./sq. in.	2.036	in. Hg.
lb./sq. in.	51.7	mm. Hg.
lb./sq. in.	703.1	kg./sq. meter
refrigeration—std. ton	200	Btu/min.
square centimeters	1.076×10^{-3}	sq. ft.
square centimeters	0.1550	sq. in.
square feet	929	sq. cm.
square feet	144	sq. in.
square feet	0.0929	sq. meters
square inches	6.452	cm.²
square inches	6.944×10^{-3}	sq. ft.
square inches	6.452×10^{-4}	sq. meters
square meters	10.76	sq. ft.
temperature ° C. 273	1.0	abs. temp. ° K.
temperature ° C. 17.8	1.8	temp. ° F.
temperature ° F. 460	1.0	abs. temp. ° R.
temperature ° F. —32	0.5555	temp. ° C.
tons (long)	1.016×10^{3}	kg.
tons (long)	2.24×10^{3}	lb.
tons (metric)	2.205×10^{3}	lb.
tons (short)	907.2	kg.
tons (short)	2×10^{3}	lb.
watts	0.05692	Btu/min.
watts	44.26	ft. lb./min.
watts	1.341×10^{-3}	hp.
watt hours	3.413	Btu
week	168	hr.
week	1.008×10^{4}	min.
week	6.048×10^{5}	sec.
years (common)	8.76×10^{3}	hr.

TOWOLDMON0030956

Viscosity conversion

Read horizontally across chart to convert readings.
Multiply readings in centistokes by specific gravity to obtain absolute viscosity in centipoises.

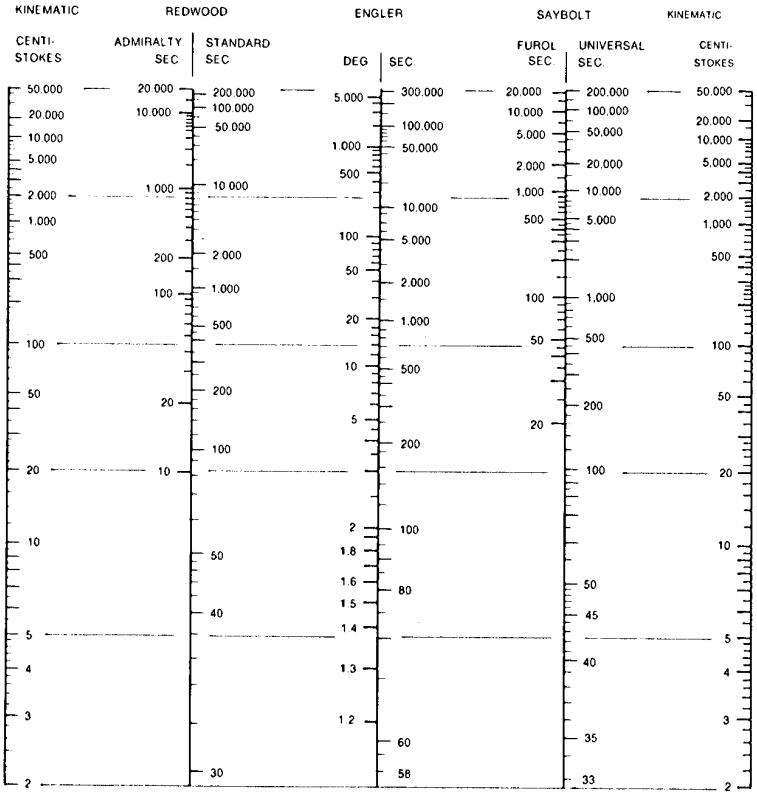

0407370

TOWOLDMON0030957

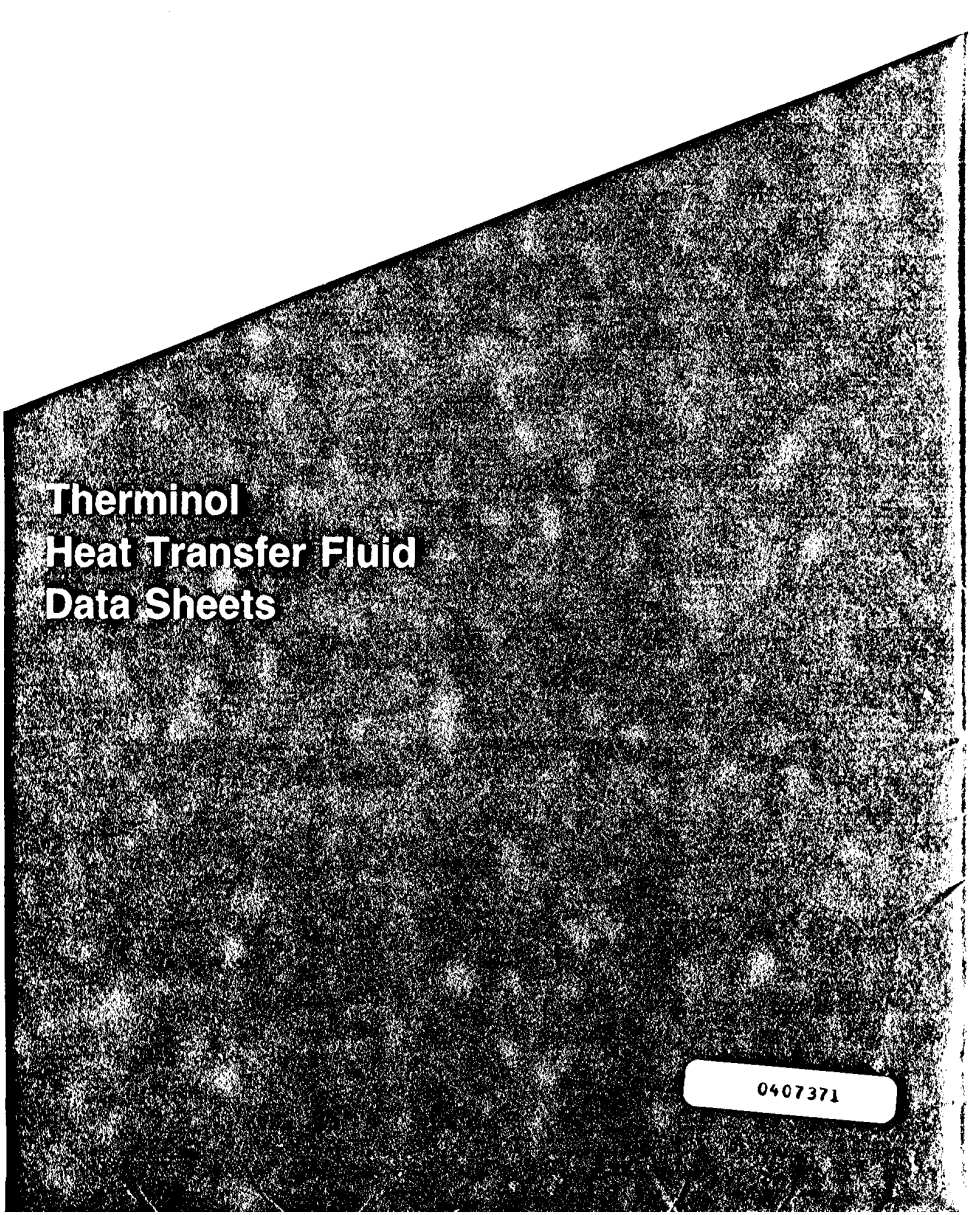

TOWOLDMON0030958

CUSTOMER SERVICE CENTERS

AKRON, OHIO 44313
260 Springside Drive
Montrose Development Park
Tel. (216) 666-4111

ATLANTA, GEORGIA 30339
320 Interstate North Parkway
Suite 500
Tel. (404) 432-7111

BOSTON, MASSACHUSETTS 02149
Everett Station
Tel. (617) 387-5010

CHICAGO, ILLINOIS
3158 Des Plaines Ave.
Des Plaines, Illinois 60018
Tel. (312) 296-6688

CINCINNATI, OHIO 45206
1501 Madison Road
Tel. (513) 751-6707

DETROIT, MICHIGAN
500 Northland Towers West
Southfield, Michigan 48075
Tel. (313) 357-0910

HOUSTON, TEXAS 77027
1301 Post Oak Tower
6051 Westheimer Road
Tel. (713) 621-9550

LOS ANGELES, CALIFORNIA 90022
6670 E. Flotilla St.
Tel. (213) 723-2492

NEW YORK, NEW YORK 10036
1114 Avenue of the Americas
Tel. (212) 764-5000

ST. LOUIS, MISSOURI 63166
800 N. Lindbergh Blvd.
Tel. (314) 694-1000

SAN FRANCISCO BAY AREA
2710 Lafayette
Santa Clara, California 95052
Tel. (408) 243-0414

SEATTLE, WASHINGTON 98121
2112 Third Avenue
Tel. (206) 622-4203

WILMINGTON, DELAWARE 19810
Suite 204, Bancroft Bldg.
3411 Silverside Road
Tel. (302) 478-4600

Monsanto Industrial Chemicals Co.
A Unit of Monsanto Company
800 N. Lindbergh Blvd., St. Louis, Mo. 63166

Monsanto

0407372

TOWOLDMON0030959