PLAINTIFF'S EXHIBIT
PLI-120

PLIBRICO SPECIFICATION M-1
FOR
CATALYST REGENERATOR LININGS

A. GENERAL

1. The lining shall be made up of two components to provide both insulation and a wear resisting surface.

2. The insulating portion of the lining shall be made up of a lightweight refractory having a density of not more than 42 pounds per cubic foot, shipping weight, as manufactured by the Plibrico Company, of Chicago, Illinois, under the trade name of "Verilite", or its equal. The thickness of this component shall be dependent upon the hot face temperature of the refractory surface and the desired vessel shell temperature.

3. The wear resistant portion of the lining shall be made up of a dense refractory having a density of 110 to 120 pounds per cubic foot, shipped weight, as manufactured by the Plibrico Company of Chicago, Illinois under the trade name of "Petro-Mix", or its equal. The thickness of this component shall be one inch minimum.

B. SUPPORTING AND RETAINING STRUCTURE

1. The supporting structure of the lining shall be made up of 1/2" studs welded to the shell on 12" centers both vertical and horizontal. These studs are to have two holes in the correct position to take 10 gauge horizontal wires.

2. The retaining structure for the insulating component shall be composed of horizontal 10 gauge mild steel wire threaded through the holes of the studs. To these 10 gauge horizontal wires shall be attached, by means of wire ties, 14 gauge 2" x 2" mild steel wire mesh. The 10 gauge wire shall be on the inside of the 2" x 2" wire mesh.

3. The retaining structure for the dense wear surface shall be either of the following:

   a. Identical to that for the insulating component, except that the 10 gauge horizontal wires, tie wires and the 14 ga. 2" x 2" wire mesh shall all be of alloy steel instead of carbon steel.

   b. In Paragraph 3-A, 1-1/2" hexagonal .047" thick 3 twist 18-8 or monel alloy poultry netting may be substituted for the 14 ga., 2" x 2" wire mesh.

C. APPLICATION PROCEDURE

1. The vessel shall be thoroughly sandblasted to remove all rust, paint, etc., after which the surface is to be thoroughly cleaned by compressed air and not by washing.

011630

APPLICATION PROCEDURE CON'T.

2. The studs shall be placed, maintaining horizontal rows, on 12" center to center spacing, both horizontally and vertically.

3. The retaining structure, for the insulating component, shall then be placed. The wire mesh shall be placed over the studs and the 10 gauge mild steel wires shall then be threaded through the holes in the studs and stretched tightly to form the support for the 14 gauge mild steel 2" x 2" mesh. This wire mesh shall then be securely wired to the 10 gauge horizontal wires, with wire ties spaced at not more than 18" centers.

4. The insulating component of the wall, Verilite or equal, shall then be placed to the required thickness, by approved pneumatic process. This installation should start at the bottom of the wall and continue upward until completed. No water curing is necessary for this portion of the wall.

5. The retaining structure, of 10 gauge horizontal alloy wires and alloy wire mesh, shall then be placed in the same manner as previously described under Section C-3.

6. The wear surface, of Petro-Mix or equal, shall then be placed, by approved pneumatic process, and shall be finished to obtain a uniform workmanlike surface.

   If the installation of the Petro-Mix wear surface is interrupted for more than two hours, provision must be made to leave the wall edge square so as to avoid all feather edges when installation is renewed

7. Both the insulating component and wear resisting component must be pneumatically applied in such a manner that each material is a homogenous mass without lamination. The full thickness should be built up at one time if possible, or successive layers must be applied immediately after the preceding layer has taken its initial set and considerably before it has taken its final set.

D. WATER CURING

1 The insulating, or Verilite component, of the lining will require no water treatment whatever. The wear surface, or Petro-Mix component, must have the following treatment to insure a dense hard surface.

2. After the surface has set to the point where it is hard to the touch, about 4 to 6 hours after application, it shall be treated with a fine mist spray of water. The spray should be gently applied to the wall surface for a period of about 12 to 16 hours. Where the application is being made intermittently, as in 8-hour working days, the water spray is to be applied at night but where application is continuous, the spray treatment should be started as soon as the surface is in proper condition and continued without interruption. Care should be taken not to wash away any of the refractory material during water curing.

02163

PLIBRICO LINING SPECIFICATION M-1

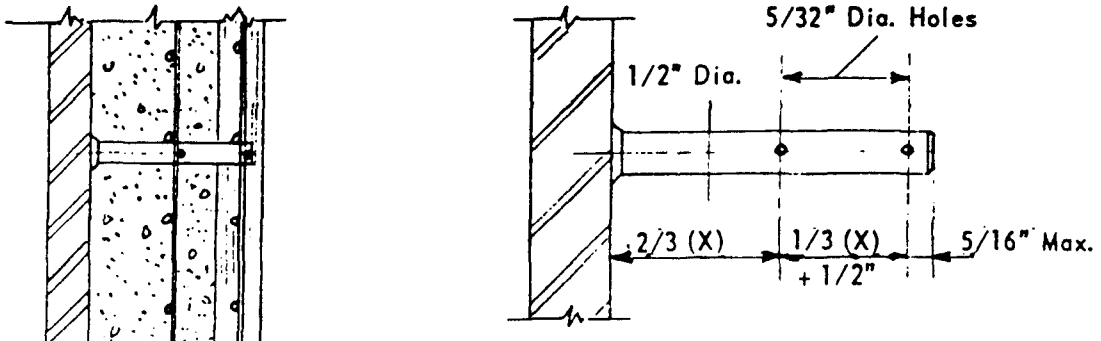

SUGGESTED STUD DESIGN

011633