COMPANY CONFIDENTIAL

RESEARCH AND DEVELOPMENT REPORT
ANNISTON PLANT

Report No. 3
Job No. 446-514
Date 8/20/71

OTHER LOCATIONS	GENERAL OFFICE	ANNISTON PLANT
*W. G. Engman - WGK	D. Danna (2)	J. T. Bell
*P. O. DeGarmo - So. 2nd	*P. B. Hodges	J. L. Corder
*A. E. Leisy - WGK	*F. J. Holzapfel	J. L. Etheredge
*A. Rasmussen - WGK	R. M. Kountz	V. R. Haupt
*E. S. Tucker - So. 2nd	*W. B. Papageorge	G. L. Jessee
	*W. R. Richard	J. C. Landwehr/W. F. Taffee
	*J. R. Savage	G. W. Miller /E. G. Wright

Title: Aroclor Pollution Study

Personnel: Ishmeal Ransaw (J. L. Brown)

Problem: Evaluate the removal of Aroclor from the Anniston Plant effluent by adsorption

Justification: Pollution Abatement

Summary:

Solids-contact Clarifier Study Using Bentonite Clay

Powdered bentonite (high silica) clay treatment of 204,430 gal. of plant waste water in a single stage solids-contact clarifier was evaluated in this pilot scale investigation. The efficiency of bentonite clay for removing Aroclor and coagulating inert suspended solids was evaluated at clay dosages of 15, 30, 120, 240 and 480 ppm and flows of 2.5 or 5 gpm. A cationic polyelectrolyte dosage of 1.5 ppm was used throughout this phase of the study.

Conclusions that can be drawn from this study are as follows:

1. Pilot plant influent averaged 360 ppb[1] Aroclor and 55 ppm[2] suspended solids during study. Single stage treatment with bentonite clays achieved an 86% reduction of Aroclor and an 80% reduction in suspended solids. Average residual Aroclor and solids concentrations were 50 ppb and 11 ppm, respectively. A coagulation system consisting of ≥15 ppm bentonite clay and Betz cationic polyelectrolyte 1170 was quite effective in removing suspended solids at flows of 2.5 and 5 gpm.

[1] ppb = parts per billion
[2] ppm = parts per million

MONS 040519

*Appendix sections not included.

2. 216,830 gal. of waste water was treated before blowdown. The solids in the overflow did not increase until the sludge pool had risen above the bottom of the center well. Better settling was achieved once the height of the sludge blanket was sufficient to enhance growth of the incoming floc. Steady state conditions for solids removal were generally reached after a 16-24 hour period.

3. Increasing the contact time and/or clay dosages produced very small changes in effluent water quality.

Solids-contact Clarifier Study Using Powdered Carbon

In a similar pilot scale study, Aqua Nuchar A activated powder carbon was used to treat 289,370 gal. of waste water. Test runs were made at carbon dosages of 25 and 50 ppm and flows of 2.5 and 10 gpm. 15-30 ppm bentonite clay and 1.5 ppm of Betz's Polymer 1170 or 3 ppm of Monsanto's RPC 926 was used as coagulants.

Conclusions that can be drawn from this study are as follows:

1. Pilot plant influent averaged 694 ppb Aroclor and 74 ppm suspended solids during the pilot test. Single stage treatment, at a 2.5 or 10 gpm flow, with a 25 or 50 ppm dosage of powdered carbon achieved a 99% reduction of Aroclor in the filtered effluent. Average residual Aroclor observed for the filtered effluent was 5 ppb. Residual suspended solids concentration was 22 ppm at both carbon dosages (25, 50 ppm) and the 2.5 gpm flow. The average suspended solids level increased to 40 ppm for the same carbon dosages at a 10 gpm flow.

2. Unfiltered effluent averaged 20 ppb Aroclor while the filtered effluents averaged 5 ppb during the study.

3. The efficiency of removing Aroclor from the influent was better at the 2.5 gpm flow and the 50 ppm carbon dosage.

4. Effluent containing $\leq$20 ppm solids was obtained in a laboratory jar test using 15 ppm bentonite clay and 1.5 ppm Betz 1170 or 20 ppm clay and 3 ppm of RPC 926. This quality of effluent was not achieved in the pilot test although the rise rate in the clarifier did not exceed 50% of the bulk settling rate in the jar test. Reasons for the bad results is believed to be due to a combination of reduced residence in the reactor mix tanks and the mechanical breaking up of the floc.

Recommendations:

Based on the work contained in PR&D Report No. 2, Job No. 446-514 and the work contained in this report, I make the following recommendations:

1. That Aroclor be removed from waste streams that contain 60 ppm or less solids and Aroclor concentrations not exceeding 10,000 ppb by adsorption in a fixed carbon bed.

2. That cost evaluations be made on the following schemes for removing Aroclor from waste streams that contain greater than 60 ppm of solids:

2.

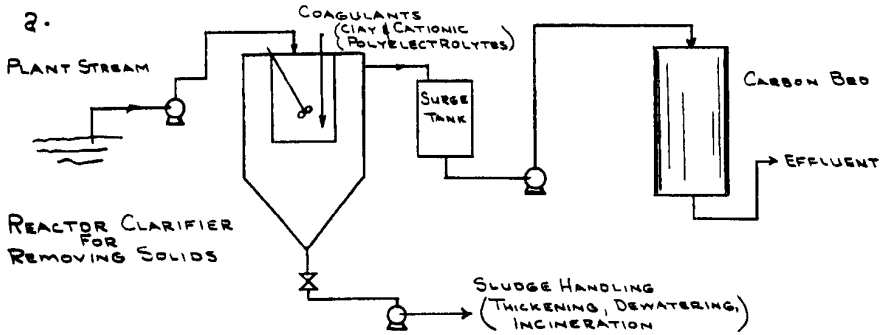

b.

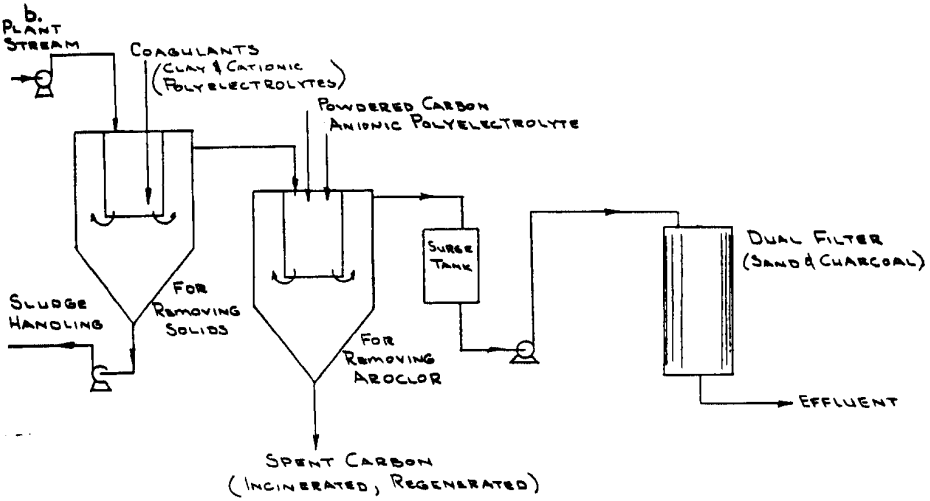

MONS 040521

C.

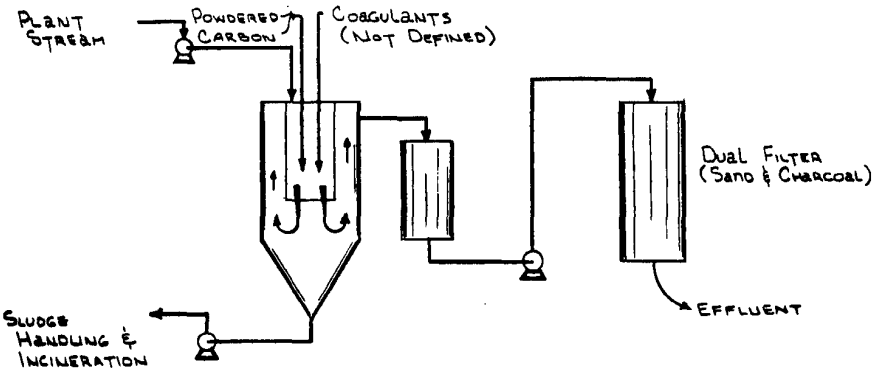

Reactor Clarifier For Removing Aroclor And Solids

Future:

1. The sludge samples that were generated in both phases of this study have been sent to Dr. Phil Hayden (Monsanto's Envirochem, Dayton, Ohio) for the following tests:

   a. Thickening

   b. Dewatering

   c. Incineration

   These test results will be reported upon completion.

2. The carbon removal phase of this study was not optimized because of vendor (Betz Lab, Eimco*) assurance that sufficient technology does exist for handling this phase of the work. A small amount of work with these vendors will be required for optimizing carbon removal and sizing the clarifier.

Ishmeal Ransaw

/dp

*Eimco Corp., under a federal contract, recently completed a successful study at Salt Lake City, Utah using Aqua Nuchar A to treat secondary waste water. Gerry Shell was project manager.

Background:

Anniston PR&D Report No. 1 (Job No. 446-514, 1/15/71) describes a process in which Aroclor is removed from the waste stream by both filtration of neutralization pit solids (on which Aroclor was adsorbed) and by adsorption of any residual Aroclor on the filtration media (carbon). In this original study, influent concentrations (100-8,000 ppb) were consistently reduced to <10 ppb upon passing through a four (4) inch diameter column (packed to a bed depth of 5.5 inches with granular carbon) at flows of up to 350 cc/min. The presence of 200-1,000 ppm of inert solid particles (size 1.5 - 250μ) set a maximum limit on the pressure and flow at which the unit could be operated. It was concluded from this study that

1. An evaluation should be conducted for removing Aroclor in a pilot adsorption unit, and

2. Such a study should not be conducted on the plant stream without some provision for removing solids.

At that point it was determined that a solution to the Aroclor removal problem could be best reached by separating the study into two phases: (1) solids removal and (2) Aroclor removal. The Aroclor removal phase of the problem was resolved in a packed-bed pilot adsorption unit with activated granular carbon. PR&D Report No. 2, issued 4/15/71 under Job No. 446-514, covers this phase of the work. The solids removal phase had essentially a two-fold objective: remove solids and Aroclor simultaneously. As a result, this latest study was divided into two phases:

1. Aroclor removal by adsorption on silica-type adsorbents followed by solids removal by flocculation-clarification.

2. Aroclor removal by adsorption on powdered carbon followed by solids removal by flocculation-clarification.

The results of these studies are contained herein.

MONS 040524

Experimental:

Part I. Aroclor Removal by Adsorption on Silica-Type Adsorbents Followed by Solids Removal by Flocculation-Clarification

A. Flow Diagram

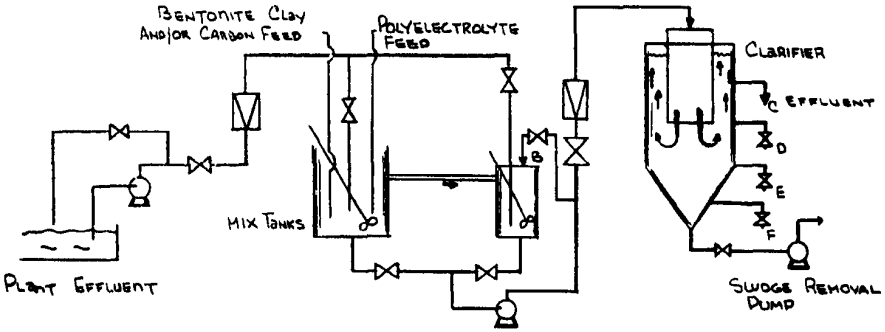

B. Equipment

1. Bentonite clay and/or carbon feed pump -- Hills-McCanna, Model 16 metering pump. Capacity: 6.3 gph

2. Polymer feed pump

3. Mix tanks. The premix tanks for bentonite clay, polyelectrolyte and coagulant-waste water were all constructed of carbon steel drums (40 gal. capacity). Each of the mix tanks, with the exception of the polymer tank, was equipped with Lightnin mixers (Model NC-4) turning at 1,725 rpm.

4. Waste water and clarifier feed pumps. Ingersoll-Rand (Model C55-3222) centrifugal pump. Although this pump proved adequate for this phase of this study, it is not recommended for transferring this type of floc. It physically breaks up the floc.

5. Clarifier. A 2,300 gal. clarifier unit (8 ft. diameter by 4 ft. side) with a 5.5 ft. cone at the bottom. The unit contained a center well (2 ft. diameter by 4 ft.) or draught tube whose bottom was at the base of the cone. The unit had 3 ports for sampling the sludge underflow. These ports were positioned in the following manner with respect to the draught tube.

   Port D -- 1 ft. above end of tube

   Port E -- At bottom of tube

   Port F -- 1 ft. below tube

C. Solids Removal Studies

Separate tests were conducted on the plant effluent at different levels (i.e. 100-1,000 ppm) of neutralization pit solids by Betz Lab and Denver Equipment. Their problem was to define a system that would simultaneously reduce solids, total organic carbon (TOC) and hopefully PCB levels. The results of these studies follow.

1. Betz Lab Coagulation Study

After screening several coagulant and coagulant aids Betz's Lab concluded that an effluent containing $\leq$20 ppm solids and $\leq$2 ppm TOC was best obtained using 15 ppm Bentonite clay and 1.5 ppm of Betz polyelectrolyte 1170. Most of Betz's tests centered around Bentonite clay because of its affinity for the organic carbon.

2. Denver Equipment Company Tests

   a. Coagulation Studies. The process developed here involved chemical coagulation with 400 ppm CaO and 10 ppm aluminum sulfate followed by the addition of 4 ppm of Dow's Separan MGL to enhance floc growth and settling. Calgon 230, Gamulose W and Nalco 675 all gave similar results to Separan MGL.

b. Froth Flotation Study. The best flotation effluent (i.e. containing 34.5 ppm solids) was obtained using 56 ppm of Armac T and 30 ppm of Aerofroth 65. Effluent samples were sent to the Anniston Lab for PCB analysis. As was found in previous batch tests as these, it was difficult to determine how much PCB had actually been removed by the floc.

The Betz proposal was utilized in this phase of the pilot study because it was felt that Bentonite clay ($Al_2(SiO_2)_3$ would provide surface area for the adsorption of PCB since previous testing had indicated the adsorption of PCB on glass and the silica type solids from the neutralization pit. Further, Monsanto's RPC 926 cationic polymer can be used in conjunction with Bentonite clay based on the work of Dr. Bruce Eley (Central Research) which indicates that similar PCB and solids removal to the Betz system are realized with coagulant concentrations of 20 ppm Bentonite clay and 3 ppm RPC 926.

D. General Procedure

Effluent from the plant stream was pumped at a controlled rate into the first of the two 40 gal. premix tanks equipped with Lightnin mixers. Into the same tank was metered, subsurface, 1.5 ppm of Betz's polyelectrolyte 1170 and ~15 ppm of Bentonite clay. The flocculated slurry was then allowed to overflow into premix tank #2 where it was then pumped at a controlled rate into the clarifier. The flow through the clarifier is indicated by the arrows on the flow diagram. Influent and effluent samples were caught at intervals at points A and C, respectively, and analyzed for Aroclor and suspended solids. The height of the sludge blanket in the clarifier was determined by taking samples at points B, E and F (flow diagram).

E. Sampling

Three sets of influent and effluent samples (24 hour composite of 300 ml each) were taken by catching a 100 ml aliquot every 8 hours. One set of samples was taken for each of the following analyses:

1. Liquid Aroclors (1221, 1242, 1254 and 1260)

2. Solid Aroclors (5432, 5460)

3. Suspended solids

Care was taken to avoid the contact of the sample with the plastic cap (known to adsorb PCB).

F. Coagulant Feed

1. Bentonite Clay. Powdered Bentonite clay (American Colloid Company, Skokie, Ill.) was weighed into 37.9 gal. of city water with the vigorous agitation of a Lightnin mixer (1725 rpm). (A slurry concentration of 3% clay in water should not be exceeded for best pumpability.) The slurry was metered into the reactor mix tanks by a Hills-McCanna metering pump. Tests were run at 15, 30, 120, 240 and 480 ppm Bentonite clay concentration. These runs are tabulated in Tables I, II, III, IV and V. Final test runs were made at the 240 and 480 ppm clay concentration using one part by weight of American Colloid Bentonite clay and 3 parts by weight of Donoho clay (locally available clay containing 95+% SiO_2) to make up the total clay concentration. The Donoho clay would not flocculate alone in the presence of the polyelectrolyte. The results of the final tests are tabulated in Tables VI and VII.

2. Polyelectrolyte. The desired quantity of Betz Polyelectrolyte 1170 (100% liquid) was weighed into 37.9 gal. of city water. The polyelectrolyte solution was metered into the reactor premix tanks at a controlled rate to maintain a 1.5 ppm polymer concentration. The polymer concentration is critical.

G. Flow Rate

Previous adsorption studies with silica type adsorbents had indicated a slow adsorption rate of Aroclor on such adsorbents. So these tests were run at a 2.5 and 5 gpm flow to realize the maximum contact time practical with this system. At the 2.5 and 5 gpm flow this gave residence times of approximately 32 and 16 minutes, respectively, in the reactor premix tanks.

H. Analytical Analysis

1. Aroclor. The Aroclor was extracted from the aqueous sample into a hexane solvent. Once extracted, the hexane solution was then dried and analyzed on a EC/GC. The concentration of Aroclors 1221, 1242, 1254 and 1260 was determined by comparing the main peak height of the unknown with the height of the same peak in the chromatographs of known Aroclor solutions of pure 1221, 1242, 1254 and 1260. The analytical results are tabulated in Appendix A. Aroclor concentrations are measured in parts per billion (ppb). An analytical method is presently being developed for analyzing 5432 and 5460 in waste water. Samples of the tests described in this report have been retained for solid Aroclor analysis as this method development is completed.

2. Suspended Solids. The concentration of suspended solids in each sample was determined by filtering a weighed sample of unknown through a filtering crucible of constant weight. The weight of the dried solid was determined and the solid concentration of the sample was calculated thus:

$$\text{Solids (ppm)} = \frac{\text{wt. of solids} \times 10^6}{\text{wt. sample}}$$

The analytical results are tabulated in Tables I - VII, Appendix A.

Discussion:

Test Results. The results of the pilot run with respect to the removal of Aroclor and suspended solids by primary flocculation-clarification are tabulated in Appendix B. During the pilot run, approximately 204,430 gal. of effluent (containing an average Aroclor concentration of 50 ppb and solids concentration of 11 ppm) was produced from influent waste water with average concentrations of 369 ppb Aroclor and 55 ppm suspended solids (Tables I - V). Results of tests (Tables VI and VII) in which Bentonite (American Colloid) and Donoho (high silica) clay were used in conjunction are similar to the results recorded for Bentonite clay (American Colloid) alone. Primary clarification with this coagulation system is adequate for reaching the desired solids level and reducing the PCB level to a somewhat constant level (50 ppb), but it was not sufficient for obtaining the desired PCB quality (i.e. ≯10 ppb).

Process Parameter:

A. Influent Water Quality. All the tables in Appendix A show a wide variation in the Aroclor levels of the influent. The Aroclor levels of the effluent show a corresponding relationship to the Aroclor levels of the influent.

B. Clay Concentration, Flow Rate and Contact Time. Varying these parameters during the course of the study produced very small changes in the effluent Aroclor quality. The efficiency of solids removal was adequate (20 ppm) over all clay concentrations and flows.

C. Loading Capacity. The loading capacity of Bentonite clay is very small. For an illustration consider the data in Table I. Here eight (8) pounds of Bentonite clay was used to remove approximately 0.145 pound of Aroclor. This gives a loading of 1.6%. The loading capacity is even less for the data in Table V. This loading factor could be greater if the TOC of the effluent had been considered.

MONS 040529

D. Temperature. Temperature was not a big factor in this phase of the study. It was observed, however, that the dissolved solids level increased during periods in which large quantities of acid (HCl) were being sewered. The temperature, which reaches $50^{o}C$ during prolonged periods of sewering acid, could cause a future dissolved solids problem.

Part II. Aroclor Removal by Adsorption on Powdered Carbon Followed by Solids Removal by Flocculation-Clarification

Experimental:

A. Flow Diagram - Same as Part I

B. Equipment - Same as Part I

C. Carbon, Pit Solids Removal Evaluation by Jar Test

1. Equipment

a. Mixer - Variable speed between 20-100 rpm.

b. Container - One liter plus cylinder (3 in. I.D. X 12 in.)

c. Sampling apparatus - 100 ml pipette

2. Chemicals

a. Waste water with varying levels of solids (100-1,000 ppm)

b. 500 ppm solutions of:

(1) Betz polyelectrolyte 1170 (liquids in free state)

(2) RPC 926 (liquid in free state)

(3) Hercules Hercufloc 814.2 (solid in free state)

c. 500 ppm agitated slurry of Bentonite clay

d. Westvaco's Aqua Nuchar A powdered carbon

3. Procedure

One liter of the plant effluent (with a solids level between 100-1,000 ppm) was added to the cylinder equipped with a variable speed agitator. To this container was

added 0.0500 gm of Aqua Nuchar A carbon to make up a solution of 50 ppm carbon. The slurry was then agitated vigorously for 2 minutes. The speed was then reduced to 50 rpm. Then 0.30 or 0.40 ml of clay was added, followed by the addition of 1.0, 3.0 or 6.0 ml of one of the polyelectrolyte solutions (Betz 1170, RPC 926 or Hercufloc 814.2). After 4 minutes of agitation at 50 rpm, the agitator was removed and the floc was allowed to settle 6 minutes. Then 100 ml of solution was pipetted from the reaction mass about 3 inches below the surface of the liquid and analyzed for solids.

4. Results

These jar tests were run mainly to see what flocculants gave the best results on a comparison basis rather than to actually size a clarifier. The following summary gives some details on how these flocculants compare against certain properties:

Betz 1170 -- Critical concentration is 1.5 ppm. Floc is dense and fluffy. Floc grows and settles more rapidly as the Bentonite clay concentration is increased. It will not flocculate without the clay. The floc occupied less than 1% of the total volume after 6 minutes settling. Effluent clarity is good after 6 minutes settling ($<$20 ppm solids).

RPC 926 -- Critical concentration is 3 ppm. Floc is fine. Floc growth and settling is improved as the clay concentration is increased. It will not flocculate in the absence of clay. The floc occupied 50% of the total volume after 6 minutes settling. Effluent clarity is poor after 6 minutes settling but improves with time.

Hercufloc 814.2 -- Critical concentration is 0.5 ppm. Floc is dense and fluffy. Floc grows and settles more rapidly as the clay concentration increases. Flocculates in absence of clay. The floc with or without clay occupies $<$1% of the total volume after 6 minutes settling. Effluent clarity is good.

Hercufloc was superior to RPC 926 and Betz 1170. Bentonite clay and RPC 926 and Betz 1170 were chosen as coagulants for this study because of the handling difficulties experienced using the solid polymer Hercufloc 814.2. This compound is difficult to solubilize.

MONS 040531

General Procedure:

The procedure described in Part I was kept basically the same for this phase with the exceptions of the following changes:

1. Carbon and clay feed and concentration.

2. The sampling technique was partially altered. All changes in the general procedure are discussed in more detail below.

A. Sampling

The sample load was increased to 8 for this study. The two additional samples were effluent samples from the reactor mix tanks (sampling point 8, flow diagram) and the clarifier. Both of these samples were filtered with filter paper (Whatman 1). The filtrates were analyzed for liquid Aroclor. The sample taken for solid Aroclor (5432 and 5460) analyses was likewise filtered. Influent sampling technique, sample size and rate were not altered from that described in sampling section, Part I.

B. Flow Rate

Previous experience had indicated a rapid adsorption rate of Aroclor on carbon. Initial plans were to obtain trial data at a 5 gpm flow, then increase the flow to 10 gpm (i.e. hydraulic limit of this system). The solids in the overflow, however, exceeded the set limit of 20 ppm at this flow. Flow was then decreased to 2.5 gpm in an effort to optimize conditions for removing carbon from the overflow. A better quality of effluent was realized by increasing the clay concentration to 30 ppm (Tables I and II, Appendix B). After operating at these conditions, the flow was then increased to 10 gpm where the study was completed.

C. Carbon-Clay Feed and Concentration

The desired carbon[1] and clay[2] quantity was weighed into the same agitated mix tank and metered simultaneously into the reaction zone. Tests were run at a 25 and 50 ppm carbon concentration. The clay concentrations were varied at a 15, 20, or 30 ppm level in an effort to optimize coagulant concentrations for maximum solids removal.

[1] Westvaco's Aqua Nuchar A powdered carbon
[2] American Colloid Bentonite clay, Skokie, Ill.

Polyelectrolyte feed concentration -- Polyelectrolytes 1170 and RPC 926 -- were fed in the same manner as in Part I. Betz 1170 was fed into the reaction zone at a 1.5 ppm concentration and RPC 926 at a 3 ppm concentration. The effect of the two polyelectrolytes on solid removal is seen in Tables V and VI.

Discussion:

A. Test Results

The data recorded in Tables I, II, III, IV, V and VI, Appendix B, describes the performance of a single stage contacting unit for removing Aroclor and solids from the plant waste stream. In each table, there is tabulated the volume of effluent treated and the average suspended solids and Aroclor concentrations in the influent and effluent after the reactor mix tanks and the clarifier. Carbon, at both a 25 and 50 ppm concentration, was effective in reducing the Aroclor in the filtered effluent to the desired level (10 ppb) at both flows (2.5 and 10 gpm). The desired solids level (20 ppm) was realized at both carbon concentrations at the 2.5 gpm flow (Tables I and II). Solids in the overflow far exceeded the 20 ppm level at the 10 gpm flow for both carbon concentrations (i.e. 25 and 50 ppm). See Tables III, IV, V and VI.

B. Process Parameters

1. Influent Water Quality. The average Aroclor level of the waste water fluctuated between 300-1,300 ppb during the pilot test. The solids level was fairly constant except during times of prolonged periods of rainfall and/or when acid was being sewered. High influent Aroclor level generally corresponded to slight increases in Aroclor of the effluent. This fact is more evident (see Table III) at low Aroclor concentration (25 ppm) and high flow (10 gpm). The effect of the influent solids level was not defined at the maximum flow and carbon concentration. There was no apparent effect on the total effluent quality at either carbon concentration (25 or 50 ppm) and the 2.5 gpm flow.

2. Flow Rate, Contact Time. At the 2.5 and 10 gpm flow, the contact time in the reactor mix tanks were 32 and 8 minutes, respectively. The effect of contact time is not apparent at the high carbon concentration (50 ppm) and flow (10 gpm). The effect of contact becomes more apparent when the effluent Aroclor quality (after the reactor mix tanks) is compared at the 25 ppm carbon level for both the high and low flow. (See Tables II and III.)

3. Carbon Concentration. The comparison of the results of Tables III and IV indicates that the Aroclor is better adsorbed at the 50 ppm carbon level. Results contained in Tables I and II suggest the Aroclor can be effectively removed at both carbon concentrations with ample contact time. The 50 ppm concentration is more effective in this system because a slight excess of carbon is necessary to overcome the factors which affect the kinetics and equilibrium of adsorption as solids and other organics in the plant stream.

4. Solids in the Overflow. By comparing the Aroclor levels of the filtered and unfiltered effluents in Tables III and IV, it is evident that Aroclor is being carried over with the solids in the overflow. Aroclor removal can only be optimized where the solids level is less than 20 ppm (Tables I and II).

   The solids in the overflow exceeded the 20 ppm level at the high flow rate (10 gpm) and any carbon level. The following changes were made, without significant improvement, in an effort to improve the settling in the clarifier:

   a. The clay concentration was increased to 30 ppm to weight the floc.

   b. The clarifier was operated with essentially no sludge blanket and with the blanket at the bottom or slightly above the bottom of the center well (see Tables V and VI). In Table VI the solids level in overflow gradually increased as the height of the sludge blanket increased.

   Even after blowdown, the sludge blanket quickly rose and remained in the free clarification zone. This observation suggested that the floc was very light. In an effort to determine the cause for the very fine floc being produced, a sludge sample was taken, slowly agitated 4 minutes and allowed to settle. The floc settling rate was comparable to that observed in the lab jar test. Since the rise rate (0.3 gpm/ft^2) in the clarifier did not exceed 50% of the bulk settling rate, it was concluded that the floc was being mechanically broken up (not sheared) by the high speed agitator and centrifugal pump, and that there was not enough agitation or time in the center well for the floc to reform.

5. Carbon Loading Capacity. During the pilot test 289,370 gal. waste water was treated with 114 pounds of carbon to remove an average of 2 pounds of Aroclor. This gives a carbon

loading of 2%. This does not take into consideration the other TOC also being adsorbed by the carbon.

6. Blowdown Rate. This parameter was not defined.

Ishmeal Ransaw

/dp

ACKNOWLEDGEMENT -- I wish to thank Mr. Don Turner, Analytical Lab Technician, who conducted all Aroclor analyses for this study. Further, I wish to extend gratitude to all the personnel of the Analytical Lab who helped to monitor the pilot operation during off-shift and run the suspended solids samples.

MONS 040535