PLAINTIFF'S
EXHIBIT
CHV-520

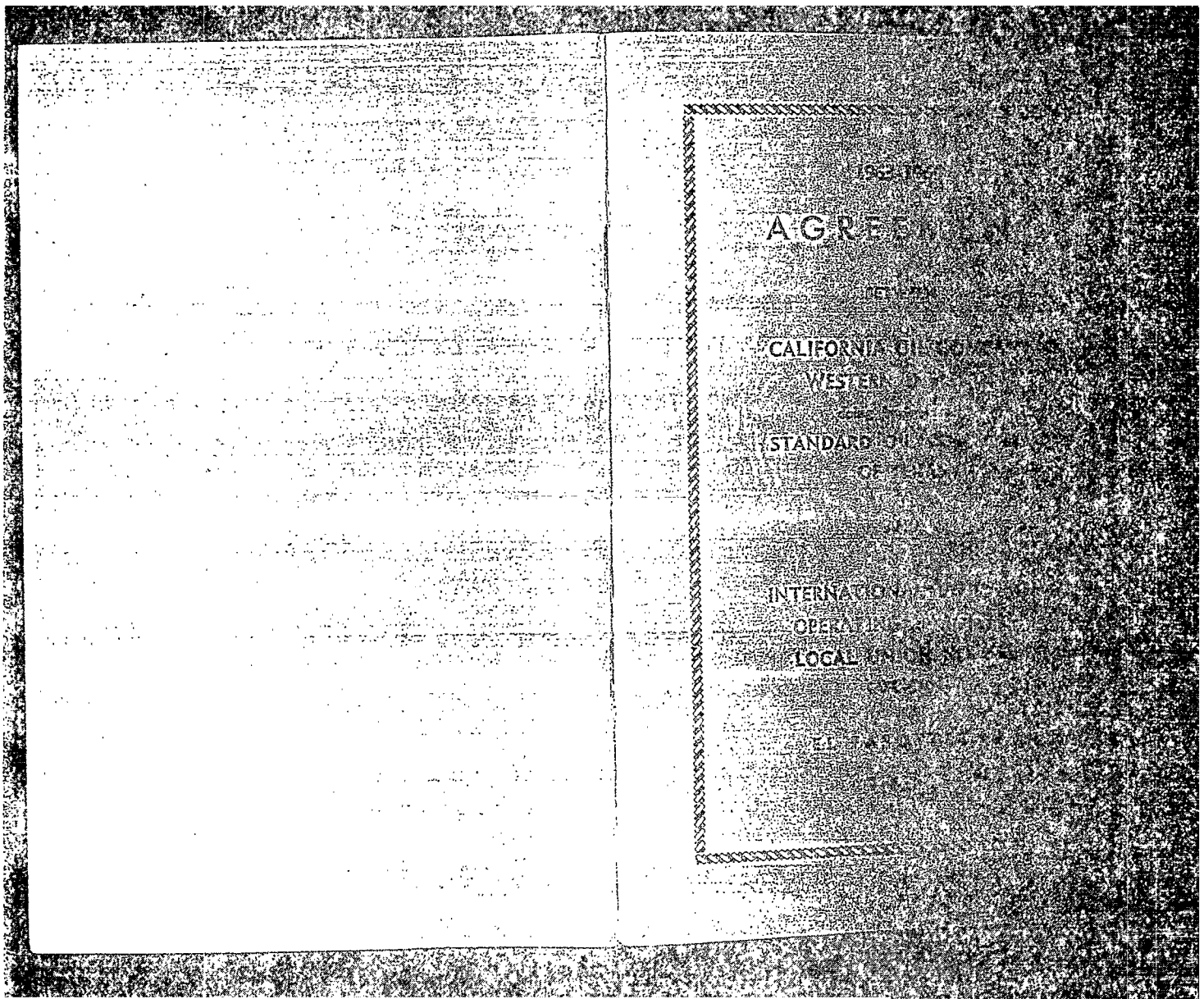

AGREE

CALIFORNIA OIL
WESTERN

STANDARD

INTERNATIO
OPERA
LOCAL

CHEV B8 7162

INDEX

ARTICLE	SUBJECT	PAGE
—	Recognition of Union	1
I	Period of Agreement and Wage Clause Negotiation	2
II	Work Day, Work Week and Work Schedules	3
III	Wage Rates, Overtime and Extra Compensation	4
IV	Seniority	11
V	Promotions, Demotions, Layoffs and Rehirings	11
VI	Vacations, Holidays and Fringe Benefits	18
VII	Union Activities:	
	A. Workman's Committee	21
	B. Union Leaves of Absence	21
	C. Leave of Absence to Enter the Employment of The Union	22
	D. Discrimination, Coercion or Intimidation	23
	E. Conferences During Working Hours	23
	F. Bulletin Boards	24

CHEV B8 7163

INDEX

VIII Miscellaneous and General:

A. Clothing 24
B. Voluntary Payroll Deduction of Union Dues 24
C. Payroll Deductions for Savings 25
D. Strikes and Lockouts 25
E. Smoking Areas 26
F. Contract Labor 26
G. Reprimands 26
H. Industrial Injuries 26
I. Miscellaneous 27

IX Settlement of Disputes and Grievances 27

X Management Rights 31

XI Saving Clause 32

XII Notices, Procedure for Handling 32

Exhibit "A"—Refinery Classified Laboratory, Operating and Mechanical Wage Schedule 33

Exhibit "B"—Progression Chart Maintenance and Storehouse 35

Exhibit "C"—Operations Progression Chart 36

Exhibit "C"—Progression and Transfers Within the Operating Division 37

1963-1964

AGREEMENT

between

CALIFORNIA OIL COMPANY
d/b/a
STANDARD OIL COMPANY OF TEXAS

and

INTERNATIONAL UNION OF
OPERATING ENGINEERS
LOCAL UNION NO. 552
El Paso, Texas

This AGREEMENT is made and entered into this 8th day of May, 1963 between California Oil Company, d/b/a Standard Oil Company of Texas, with a refinery at El Paso, Texas, herein referred to as the "Company," and International Union of Operating Engineers, Local No. 552, herein referred to as the "Union." This agreement shall be considered to be the entire agreement between the parties, and no agreement which predates this agreement shall have any other force or effect.

WITNESSETH:

RECOGNITION OF UNION

The Company recognizes the Union as exclusive representative for the purpose of collective bargaining with respect to wages, hours of work and other conditions of employment, of employees in the Maintenance, Operating

CHEV B8 7164

and Laboratory Divisions of the Company's El Paso Refinery for whom the Union was certified as the collective bargaining representative in the National Labor Relations Board certifications dated May 7, 1943 (Case No. 16-R-629) and August 31, 1953 (Case No. 33-RC-453), subject to and in accordance with the provisions of the National Labor Relations Act, amended by the Labor-Management Act.

ARTICLE I

PERIOD OF AGREEMENT AND WAGE CLAUSE NEGOTIATIONS

A. This agreement shall be effective as of March 30, 1963 and shall remain in effect until March 30, 1964, and shall be automatically renewed for consecutive periods of one (1) year each thereafter, unless either party shall notify the other in writing of its intention to terminate the agreement, a least sixty (60) days prior to the first day of any contract year; provided, however, that either party may notify the other party in writing at least sixty (60) days prior to the first day of any contract year, of its desire to change, amend, or omit any article or articles contained in said agreement, and the serving of such notice shall have the effect of annulling the said article if no agreement is reached within sixty (60) days after the termination date of the agreement. The remainder of the contract shall be automatically renewed unless notice is given of intention to terminate the entire contract as hereinabove provided.

B. The provisions of Article II and Article III, relating to hours and days of work and to wage rates, may be opened one time by either party, for further negotiations at any time during the contract year; and negotiations shall commence within thirty (30) days after notice has been given. Any agreed changes which may result from such negotiations shall be effective on the date mutually agreed upon.

ARTICLE II

WORK DAY, WORK WEEK AND WORK SCHEDULES

A. A work week shall consist of seven (7) consecutive 24-hour week-days, starting at 11:00 p.m. Sunday for shift workers, and 12:01 a.m. Monday for day workers.

B. A regular work day shall consist of eight (8) consecutive hours, exclusive of lunch periods, except as specifically provided for herein. Each regular work day is to start in a different 24-hour week day specified in A. above. The unpaid lunch period for day workers will be from 11:30 a.m. to 12:00 noon when consistent with the work on hand. The Company shall allow a five (5) minute paid period prior to the lunch period for day workers to stop work, clean up and travel to the lunch area. Normally, but not exclusively, the regular work day for day workers will be the day shift worked between the hours of 7:00 a.m. and 5:30 p.m. Day workers working a regular 8-hour work day starting or ending

CHEV B8 7165

outside the hours 4:00 a.m. to 8:30 p.m. shall be allowed a fifteen (15) minute paid lunch period on the job site plus an additional five (5) minutes for cleanup and travel to their respective lunches on the job.

Day workers are those who normally work day shift as contrasted to shift workers who regularly work No. 1 shift—11:00 p.m. to 7:00 a.m.; No. 2 shift—7:00 a.m. to 3:00 p.m.; and No. 3 shift—3:00 p.m. to 11:00 p.m.

C. A regular weekly work schedule shall consist of five (5) regular work days, with two (2) consecutive days off. No employee shall work less than a regular weekly work schedule. In determining the regular weekly work schedule, excused absences (such as sickness, personal leave, etc. whether paid or unpaid) on regular scheduled work days shall count as days worked. The Company will establish and post regular weekly work schedules, consistent with operating requirements. The regular weekly work schedule of day workers shall show the hours of work, days of work, and the days off. Such weekly work schedules shall be posted not later than 3:30 p.m. on the Friday prior to the week in which they are to become effective.

ARTICLE III

WAGE RATES, OVERTIME AND EXTRA COMPENSATION

A. Wage Rates, Exhibits, Shift Differentials

1. Wage rates shall be those for work performed in the Company's present job classifications, set forth as Exhibit "A", or any wage rate or classification mutually agreed to hereafter.

2. a. Where an employee of an Operating division works in two classifications in one (1) day, and works less than half (½) a day in the classification carrying a higher rate than the classification in which he works the balance of the day, he shall be paid for one-half (½) a day at the hgh rate and the other half (½) day at the lower rate. If he works one-half (½) day or more in the classification carrying the higher rate of pay than in the classification in which the balance of the day is worked, he will be paid a full day at the higher rate.

b. When an Operating division employee is called upon to relieve a man in a lower classification, he will not be reduced in pay in cases where he might otherwise have continued to work at the higher pay. This is not intended to apply to changes from a higher to lower classification occasioned by the normal fluctuation in work.

3. An employee promoted to a higher classification shall be paid at the rate of that classification upon starting such work.

B. Overtime, Extra Compensation and Other Premium Pay

1. General—No more than one premium or overtime provision in this agreement shall be

CHEV B8 7166

applied to the same hours worked; however, the provision which results in the highest pay shall govern.

2. Extra Compensation (1½ times the regular rate) shall be paid in addition to the regular rate, for hours worked on a regular scheduled work day, under the following conditions:

a. Time worked in excess of eight (8) hours in any 24-hour period, other than overtime as defined in 3.a. and 4. below ("N" time).

b. When employees are scheduled to work a shift which may extend from one calendar day into the next, the emloyee involved will be paid at the overtime rate for the hours worked on such employee's first off day, with such off day considered as starting at 12:01 a.m. for day workers and 11:00 p.m. for shift workers.

c. For the first shift scheduled to be worked and worked where the regular work day has been changed as listed below without forty (40) hours notice prior to the start of the first shift changed ("M" time).

(1) A change in the scheduled days off.

(2) A change in the scheduled shifts of an Operator who is working on an operating schedule, or a Laboratory employee who is working on the Laboratory schedule: i.e., change from shift No. 1 to shift No. 2, etc.

(3) A change of more than one (1) hour in the starting time from the preceding work

day, of the regular day of a Maintenance and Storehouse division worker, or of an Operator or Laboratory employee who is working on, going onto, or coming off a maintenance schedule.

d. Compensation provided in (3) above shall not be paid because of:

(1) Consecutive hours worked preceding or following a regular work day.

(2) When an employee changes to a day shift from any other shift.

3. Overtime rate (1½ times the regular rate) shall be paid for:

a. All work performed outside of, or in excess of, the regular weekly work schedule ("K" time), except as specified in b. and 4. below.

b. "Call out"—Any employee who reports for work after he has completed his shift and has left the plant, and before the start of his next regular scheduled shift or on a day off, shall be paid a minimum of four (4) hours pay at his straight time rate or time and one-half for work performed, whichever is greater.

Call Out—Identification

(1) An employee, while on duty, is requested to report for work and reports for work after completing his shift, but before the start of his next regular scheduled shift, and leaves the plant prior to the start of his next regular scheduled shift.

CHEV B8 7167

(2) An employee, after completing his shift and after leaving the plant, is requested to return and returns to the plant before the start of his next regular scheduled shift. It is agreed that the time and one-half rate shall not apply beyond the start of his next regular scheduled shift.

The payments shall be referred to as "Q" time and shall be paid as provided herein except a man shall be paid at "double time" rate where 4. below applies.

4. Overtime rate (2 times the regular rate) shall be paid for:

a. All hours worked in excess of sixteen (16) consecutive hours; i.e., beginning on the 17th consecutive hour ("K-D" time).

b. All hours worked on the second day off, where a minimum of four (4) hours on the first off day is also worked, when these off days are consecutive calendar days but not necessarily within the same work week ("K-D" time). For the purpose of double time payment only, both off days will start at 12:01 a.m. and end at 12:00 midnight the same day, except for employees whose shifts start at 11:00 p.m., 7:00 a.m., or 3:00 p.m. for whom both off days will start at 11:00 p.m. and end at 11:00 p.m. the next day.

5. Extra Compensation (straight time for hours scheduled, plus 1½ times for hours worked).

a. Employees who work on an observed

holiday shall receive 1½ times the straight time rate for all hours worked in addition to straight time, for the number of hours in their regular daily work schedule. See Article VI.B.3.

C. Distribution of Overtime

1. An effort will be made to distribute overtime equally among employees qualified in the classification and section in which the overtime occurs, except those assigned to light duty for health reasons. Any employee who is to be absent from his assigned shift shall notify the Company as far in advance of such absence as possible.

2. To give effect to paragraph 1. above, as applied to refinery operators, laboratory technicians and technician helpers, the following procedures will be observed:

a. The employee handling the job on the shift preceding the vacant shift will be asked to work the additional shift. In this case he may work the entire shift; or half of it, if he so desires, and the regular operator on the shift following the vacated shift is willing to work the other half. This provision will not apply:

(1) Where the employees referred to above have worked more than twelve (12) hours in the preceding twenty-four (24) hours, or

(2) Where the employees refered to above have already worked the afternoon shift on

CHEV B8 7168

their first scheduled days off in their regular weekly work schedules, or

(3) Where the Company has more than eight (8) hours advance notice of the absence, or

(4) Where there is an employee on the vacated shift who can be made available and who is qualified to relieve any job that will provide relief for the vacancy.

D. Overtime Meals

1. When employees are required to work overtime more than two (2) hours beyond their regular scheduled quitting time, meals at the Company's expense shall be considered due upon completion of the first two (2) hours of such overtime and at intervals of each four (4) hours of continuous overtime thereafter. The cost of meals so provided shall not exceed $1.50 each.

2. When it is definitely known in advance that an employee will work over six (6) hours overtime, Company may provide him with one meal to cost not over $3, in place of two separate meals at $1.50 each. The employee shall, if he prefers, be provided with a meal allowance of $1.50 in place of the second meal.

3. When the meal is furnished by the Company for Maintenance personnel, a work stoppage of thirty (30) minutes, at Company expense, will be allowed for eating.

ARTICLE IV
SENIORITY

A. For the purpose of administering this article, and Article V, seniority of two types shall be considered as stated below:

1. Refinery seniority, which shall be based on the date of entering the service of the El Paso Refinery; and

2. Section seniority, which shall be based on the date Company assigns an employee to a definite section as defined in this article.

B. For the purpose of this article, the recognized refinery sections are:

1. Crude Distillation
2. Stocks & Utilities
3. Cracking
4. Filling & Shipping
5. Storehouse
6. Electrical & Instruments
7. Machinists and Tool Room
8. Welding
9. Pipefitting, Boilermaking & Miscellaneous
10. Laboratory

ARTICLE V
PROMOTIONS, DEMOTIONS, LAYOFFS AND REHIRINGS

(Attached to and made a part of this agreement are "Exhibit B—Job Progression

CHEV B8 7169

Chart, Maintenance and Storehouse," and "Exhibit C—Job Progression Chart, Operating Sections," showing job classifications and the normal progression and regression paths between the various classifications and groups of classifications. These exhibits are not intended for use in determining the number of basic jobs in the Operating or Maintenance divisions which are subject to change in accordance with the provisions of Article X.)

A. Promotions

1. All promotions, demotions, placement of men displaced by job terminations, and all filling of permanent vacancies shall be based on seniority and ability. It is the intent to give every employee an opportunity to progress into higher jobs in line with his seniority. It is mutually recognized, however, by the Company and the Union, that ability must be given consideration in all such moves. Thus, there may be individuals who, thru lack of knowledge, skill or efficiency on the job, are not capable of handling the higher skilled jobs, but who are capable of satisfactorily handling some of the intermediate or lower jobs.

2. When an employee is not progressing or performing his work in a satisfactory enough manner, he will be so informed. When a promotion is made and the employee promoted is not the highest on the section seniority list of the next lower applicable rate classification, any employee higher on such rate classification and eligible for consideration for such promotion will be advised by management (in advance when possible) why such employee was not selected for such promotion; except that this notification shall not be necessary in the Operation sections for promotions made in accordance with "Exhibit C. Job Progression Chart—Operating Sections."

3. An employee promoted to a higher job and failing to perform satisfactorily on it, will be allowed to return to the job previously held by him, without loss of seniority rights.

4. Where employees are temporarily transferred or assigned to areas or organizations outside of the bargaining unit, they shall be allowed to return within a two (2) year period to the job that their seniority and ability would have entitled them to, had they remained in the refinery organization.

5. In the Maintenance division, promotions from Helper "B" to Helper "A" and from Mechanic "B" to Mechanic "A" are to be made solely on the basis of refinery service and not on the basis of performance of a higher or different classification of work. Helpers "B" will be promoted to Helpers "A" upon completion of twelve (12) months of service in the Refinery Maintenance division. Mechanics "B" will be promoted to Mechanics "A" upon the completion of:

a. 12 months of service as Mechanic "B", and

b. 60 months of service in the Refinery

CHEV B8 7170

Maintenance division, including any service as Mechanic "B".

6. a. The Company will maintain a minimum of 75% overall Mechanic to Helper ratio in the Maintenance division, provided there are Mechanic Helpers who are qualified to be Mechanics.

b. Mechanics "A" will be promoted to Senior Mechanics upon completion of 15 years refinery service, providing the number of Senior Mechanics does not exceed 10% of the total number of Mechanics.

7. Promotions from Technician Helper "B" to Technician Helper "A" are to be made solely on the basis of Laboratory service, and not on the basis of performance of a higher or different classification of work. Technician Helper "B" will be promoted to Technician Helper "A" upon the completion of 12 months of service in the Laboratory. Technician "B" will be promoted to Technician "A" upon the completion of:

a. 12 months of service as Technician "B", and

b. 36 months of service in the Laboratory, including any service as Technician "B".

8. The Company will maintain a minimum of 60% overall Technician-to-Technician Helper ratio for the Laboratory as a whole, provided there are Technician Helpers who are qualified to be Technicians.

B. Layoffs and Rehirings

1. Layoffs for lack of work, and rehirings shall be based on refinery seniority.

2. Regular employees with less than one (1) year's continuous service, who are laid off for lack of work, will have continuous service if rehired within 13 weeks after the last day worked.

3. Regular employees with more than one (1) year and less than five (5) years of continuous service, who are laid off for lack of work, will have continuous service if rehired with 26 weeks after the last day worked.

4. Regular employees with more than five (5) years of continuous service, who are laid off for lack of work, will have continuous service if rehired within one (1) year after the last day worked.

5. In case of re-employment, employees who have been laid off shall be notified by registered letter at their last known address, in order of their refinery seniority of qualified men, to report for work. In the event any employee so notified shall fail to report for work within ten (10) days of date of notice, such employee's seniority shall be terminated, provided he is not prevented from reporting because of sickness, death, or emergency involving himself or his immediate family, and so notifies the Company within five (5) days. This does not apply to men who are replacing men in the military service. Under emergency

CHEV B8 7171

conditions, temporary men may be used until former employees on the rehiring list have reported for work.

C. Demotions

1. In making demotions because of curtailment of work and not because of an employee's deficiency, position on the section seniority list shall control within each section and the employee with the least section seniority in each rate classification affected shall be the first demoted from the rate classification to the next lower applicable rate classification, provided the employee who displaces him is qualified for the work and except that the Company may retain a sufficient number of qualified men on necessary operations to permit continued efficient operation. Such demoted employees shall be placed at the top of the section seniority list of the rate classification to which demoted and shall be the first to advance to the classification from which demoted.

2. If an employee being demoted because of curtailment of work has previously worked in another section than that in which he is then working, he shall — at his request — be transferred to such rate classification in such other section for which he is qualified by experience and training, provided he has greater refinery seniority than the employee whose demotion would result therefrom. The new position in the new section seniority list shall be at the bottom of the rate classification to which

transferred, except that in event of layoffs because of lack of work, in the new section, the transferred employee shall retain his position in the new section according to his refinery seniority.

D. Inter-Section Status

1. For the purpose of administraton of Articles IV and V, all Maintenance and Storehouse employees will be assigned to a specific refinery section within one (1) year of date of employment in Company's Refinery. Section assignment will be made by Company based on workload, and Company's evaluation of employee's qualifications and preferences. The order of section assignment will be based on seniority and ability, as provided in Exhibit B. Section assignment as stated here shall not in any way interfere with Company having employee do any type of refinery work that in Company's judgment he can do safely.

2. Transfers between sections may be made with Company approval. In all cases of permanent transfer between sections, the transferred employee will enter the new section with section seniority dating from the date of entering the new section, and he will relinquish all seniority in the former section.

3. Temporary inter-section transfers may be made for short periods of time. Company records will clearly indicate the temporary nature of such transfers. The employee will not acquire section seniority in the new sec-

CHEV B8 7172

tion nor lose acquired section seniority in his regular section. If any temporary transfer is later made permanent, Company records and the seniority list will so indicate, and the provisions of par. 2. above will apply, except as provided in the last sentence of par. 1. section C. above.

ARTICLE VI

VACATIONS, HOLIDAYS AND FRINGE BENEFITS

A. Vacations

1. Employees who have completed one (1) year of service with Company shall be given (2) weeks vacation with pay each calendar year. In the tenth (10th) calendar year and in each calendar year thereafter, employees will be given three (3) weeks vacation with pay. In the twentieth (20th) calendar year and in each calendar year thereafter, employees will be given four (4) weeks vacation with pay. Operating needs are controlling as to when a vacation may be taken.

2. The vacation scheduling procedure is designed to apply to usual situations. An exceptional case may occur occasionally which is not clearly covered or contemplated. Any such case will be treated in a manner equitable to both the employee and the Company.

3. An employee may split his vacation into two (2) periods in a calendar year upon his request, consistent with the work at hand, and agreed to by the Company.

B. Holidays

1. a. The following holidays shall be observed:

New Year's Day	Labor Day
Washington Birthday	Veterans' Day
Memorial Day	Thanksgiving Day
Fourth of July	Christmas

b. Employees who are working rotating shifts on a seven day work week continuous operation, and employees who normally work Saturdays and/or Sundays, at the time of a holiday will observe the holiday for pay purposes on the calendar day on which it falls.

c. All other employees will observe the holiday for pay purposes on the calendar day on which it falls, except a holiday which falls on Sunday will be observed on the following Monday, and a holiday which falls on Saturday will be observed on the preceding Friday.

2. Regular employees shall receive their regular pay for holidays observed, when such holidays fall on their scheduled work days.

3. Employees who work on such holidays, whether scheduled or unscheduled work days, shall receive pay equal to the straight time rate for the number of hours in their regular daily work schedule plus one and one-half (1½) times the straight time rate for all hours worked. For the purposes of holiday pay-

CHEV B8 7173

ments, holidays will be considered as starting at 12:01 a.m. and ending at 12:00 midnight on the days which are observed, except that for workers scheduled to work the 11:00 p.m., 7:00 a.m., or 3:00 p.m. shifts, holidays will be considered starting at 11:00 p.m. prior to the calendar day of the holiday and ending at 11:00 p.m. twenty-four (24) hours later.

4. All regular employees shall receive eight (8) paid holidays per year. Those not so paid under the provisions of par. 2. and 3. above shall receive a day's pay at their regular straight time rate for each such holiday.

5. If, during an employee's vacation period, a recognized holiday occurs, he will be granted an extra day of paid vacation. The Company reserves the right to grant an extra day's pay at the straight time rate in lieu of an exra day of paid vacation, in any case where it considers such action desirable from an operating standpoint.

C. Fringe Benefits

1. All benefit plans, arranged by the Company for its employees, generally shall be available to employees covered by this agreement. The Company shall make information concerning such benefits available to the employees.

2. The Company will furnish to each employee having one or more years of service, an annual statement showing the employee's current status under the Sickness and Non-

Industrial-Injury Benefit Plan when requested in writing.

3. Any employee required to be absent during his regular working schedule on account of jury duty, or required to attend court, or coroner's inquest, or to serve as a witness, shall be allowed the time off necessary to perform this service. An employee shall receive for the time he is thus absent, his regular pay and retain any fee that he receives for the performance of such service.

ARTICLE VII

UNION ACTIVITIES

A. Workmen's Committee

The Union shall create a Workmen's Committee, composed of five (5) employees, who shall meet monthly at mutually acceptable times, with representatives of management for discussion of individual or mutual problems, and to dispose of questions arising under this agreement. The Union will advise the Company in writing of the names of the members of said committee. Minutes of all such meetings shall be kept and signed by all parties attending. One signed copy shall be furnished for the use of the Union and one for the use of the Company.

B. Union Leaves of Absence

If plant conditions permit, leaves of absence without pay, of not more than fourteen

CHEV B8 7174

(14) days duration (except where distances to be traveled require additional time, in which case not more than thirty (30) days) for the purpose of attending Union conferences or meetings will be granted during any calendar year to not more than six (6) employees, provided that not more than three (3) employees shall be granted simultaneous leaves. If the Union needs leaves of absence for additional men, the Company will consider such additional leaves upon request by the Union.

C. Leave of Absence to Enter the Employment of the Union

1. If any member of the Union shall request a special leave of absence without pay from his employment with the Company for the purpose of accepting employment with the Union, the application of such member for re-employment, if made within two (2) years from date of start of such leave, will be considered and accepted, on the following conditions:

a. That his physical condition shall not have changed materially during the period from date of such special leave to date of application for re-employment.

b. The request for a special leave of absence shall be in writing and shall state the purpose for which it is made and that the employee intends to apply for re-employment within two (2) years.

c. Applicant, if re-employed within said period of two (2) years, will enter the job that his seniority and ability would have entitled him to had he remained in the refinery organization.

d. It is understood that all Company benefits, including life insurance, are suspended during the period of such special leave of absence but will become operative again upon re-employment with such service accumulation attained at end of leave.

D. Discrimination, Coercion or Intimidation

1. There shall be no discrimination against any employee with respect to his conditions of employment because of his membership in this labor union, or on account of any activity undertaken in good faith in his capacity as a representative of other employees.

2. The Union, its officers and members shall not intimidate or coerce employees into joining the Union or continuing their membership therein. Neither shall the employer intimidate or coerce employees into withdrawing from, or refraining from joining the Union.

E. Conferences during Working Hours

Employees, with the approval of the Refinery Manager, shall be permitted to confer during working hours with representatives of either Union or Management on matters concerning employer-employee relations without loss of time or pay.

CHEV B8 7175

F. Bulletin Boards

The Union shall have the privilege of maintaining for its exclusive use bulletin boards on the premises in places designated by the Company, for the purpose of posting notices or bulletins. It is understood that nothing of a controversial or political nature shall be posted on such boards.

ARTICLE VIII

MISCELLANEOUS AND GENERAL

A. Clothing

1. Protective clothing, including welding gloves, sleeves and jackets, will be provided by the Company where needed for personal safety, or where destructive action over and above that encountered in the course of regular employment makes it necessary.

2. The Company shall furnish the employees with an average of up to four (4) pairs of leather-palm gloves per contract year. Before receiving a new pair of gloves, each employee will be required to turn in his old pair.

B. Voluntary Payroll Deduction of Union Dues

Employees covered by this agreement may authorize the Company in writing on a suitable form to deduct the regular monthly dues of the Union from their wages, and Company

shall remit same to the secretary of Local Union No. 552 not later than two (2) weeks after the end of the first payroll period in each month, to cover the dues for the following month. Employees may at any time revoke such authorization by giving the Company written notice on a suitable form, a copy of which will be sent to the Union.

C. Payroll Deductions for Savings

Upon written request of the employee, using Form COEM-519, the Company will make payroll deductions from that employee's earnings and deposit this money to the employee's share account with the Standard El Paso Federal Credit Union. Such payroll deductions may be cancelled at any time upon written notice to the Company from the employee.

D. Strikes and Lockouts

There shall be no cessation of work thru strikes or lockouts during the period of this agreement. If either party notifies the other of its intention to open negotiations relating to hours, days of work, and/or wage rates as provided in Article I and no agreement is reached within ninety (90) days after receipt of such notice, the "No Strike and Lockout" clause shall not be applicable thereafter with respect to disputes arising out of negotiations on these subjects only; all other terms and conditions of this agreement shall remain in full force and effect.

CHEV B8 7176

E. Smoking Areas

Smoking privileges will be provided for all employees within the refinery. Smoking areas for different departments will be designated. Smoking is prohibited at all locations not specifically authorized by the Company.

F. Contract Labor

The Company agrees that it will not contract normal routine maintenance work within the refinery as long as the refinery has the necessary men and equipment available to perform such work properly.

G. Reprimands

1. An employee will always be given a copy whenever any record of a reprimand is placed in his personnel file. He is to note on the Company's copy that he received his copy.

2. Whenever an employee is given a final warning that further unsatisfactory conduct will cause dismissal, the management will give the employee two (2) copies of the written record of this final warning. The additional copy may be provided the local union by the affected employee, if he so desires. He is to note on the Company's copy that he has received his copies of the record.

H. Industrial Injuries

An employee who is injured while working on an off day, and is unable to continue

working, will be paid for the unworked remainder of an eight hour day at the rate of pay he was receiving at the time of injury.

I. Miscellaneous

1. No employee shall, as an acknowledgment of guilt, be required to write, or affix his signature to, any letter or printed matter which the Company may use as a means of accumulating information for demoting or lowering his classification.

2. Any employee who accuses another employee of misconduct or mishandling of his duties shall be required to appear before the Workmen's Committee, the Management, and the accused to substantiate his accusation.

ARTICLE IX

SETTLEMENT OF DISPUTES AND GRIEVANCES

A. 1. Any employee who feels that he has been subjected to unfair or discriminatory treatment with respect to his conditions of employment as set forth in this agreement shall promptly and personally, within five (5) days of the incident, attempt to adjust the matter with his foreman or appropriate supervisor. This shall be done by a full and free discussion of the matter with the foreman or appropriate supervisor.

2. The foreman or appropriate supervisor will investigate the case, calling upon higher

CHEV B8 7177

management—if necessary—to aid him. He shall then give the employee an answer to his complaint, within five (5) days after receiving the complaint.

3. If the answer does not satisfy the employee, he shall so state and advise his foreman or appropriate supervisor, within five (5) days after receiving the answer, which of the following courses he wishes to pursue:

a. Have an authorized Union representative of his choice aid him in the presentation of his case to his foreman or appropriate supervisor. If this request is made, the foreman or appropriate supervisor shall specify the time, not to exceed five (5) calendar days from the time of the employee's request, and the place for such meeting; or

b. take the first step in presenting a grievance.

4. If, at the conclusion of the meeting specified in 3.a. the employee is not satisfied, he shall so state and advise his foreman or appropriate supervisor that he is taking the first step in presenting a grievance.

5. The aggrieved employee shall, as the first step of the grievance procedure, attempt to adjust the grievance by an oral discussion with the head of his division: i.e., Operations Superintendent, Chief Engineer or Superintendent-Process Engineering & Quality Control. The aggrieved employee may, if he so wishes, have an authorized Union representative of his choice present for such discussion.

The time and place for this grievance discussion shall be designated by the appropriate Division Head and shall be held within five (5) days of the employee's request. The Union will be given the opportunity to have a representative present at the time an adjustment is given.

6. Failing to reach a satisfactory understanding or adjustment, the aggrieved employee, within five (5) days thereafter, shall present in writing his case personally, or thru the representative of the Union, to the Refinery Manager. The Refinery Manager shall, within five (5) days from the date of the presentation of the grievance in writing to him, give to the employee, if he presented his case personally, or to the representative of the Union if such representative presented said grievance, the written answer of the Company to said grievance, and the representative of the Union shall notify the Refinery Manager in writing within five (5) days from the date of which the Company's answer is given, whether or not the decision of the Company on the grievance will be accepted or whether said decision shall be arbitrated.

7. If notice of arbitration is given, then within fifteen (15) days after the date of notice the Union shall advise the Company in writing and the Company shall advise the Union in writing, the name of an arbitrator. The two arbitrators so appointed shall communicate within thirty (30) days of the date of the written request for arbitration and shall

CHEV B8 7178

endeavor to reach an agreement. If these two arbitrators fail to reach an agreement, either party may, within forty-five (45) days of the written request for arbitration, notify the other in writing that they wish to select a third arbitrator, or the case shall be considered closed. If a third arbitrator is requested within the time limit, the two arbitraors shall endeavor to make a selection within sixty (60) days of the date of the written request for arbitration. Should they fail to reach an agreement on the third arbitrator they will jointly request of the Federal Mediation Service a list of five (5) names from which the third arbitrator shall be selected by each party striking one name in alternate manner until only one remains.

B. A majority decision of the Arbitration Committee shall be final and binding on all parties. In such cases, the Company and the Union shall furnish the Arbitration Committee all information in their possession necessary to a full understanding of the subject matter of the grievance.

C. The arbitrators shall have authority only to interpret and to make decisions based upon the provisions of this agreement; and shall not have authority to alter any of the terms of the agreement.

D. 1. In calculating time under this article, Saturdays, Sundays and holidays recognized under this agreement shall not be counted. Time limitations specified herein shall ordinarily be applicable but may be extended by mutual agreement between the parties to the proceeding to take care of unusual cases such as illness or other justifiable absences.

2. The Company and Union will equally divide the expense of the third member, should any be incurred.

E. Where a grievance protests the discharge of an employee, the above procedure, A.1. thru A.6. may be waived so as to permit the grievance to be referred directly to arbitration so long as this is done within ten (10) days after the discharge.

ARTICLE X

A. Subject to the provisions of this agreement, the supervision and control of all operations and the direction of all working forces, such as the determination of the size of the work force; the right to hire, suspend, discipline and discharge for just cause; the establishment of work rules; the assignment of employees to jobs and assignment of duties to employees; are vested in the Company. It is agreed that the provisions of this article shall not be exercised for the purpose of violating the terms of this agreement.

B. Changes made by the Company in the number of basic jobs in the Operating sections as a specific result of job activity surveys by the Company will not result in layoff of any of the laboratory, operating, maintenance and filling and shipping employees covered by this

CHEV B8 7179

agreement and in Company employment as of August 1, 1961. This provision does not apply to any layoffs due to curtailment of work or shutdown of operating equipment or plants as a result of lack of stock or commitments, which are covered in Article V.B., or resulting from causes beyond the Company's control.

ARTICLE XI

If any of the provisions of this contract shall be held invalid by any governmental authority, such actions shall not invalidate the other provisions hereof.

ARTICLE XII

Notices herein provided may be given by depositing the same in the United States mail in a sealed envelope, registered and postage paid, and addressed by one party to the other as follows:

International Union of Operating Engineers
Local No. 552
P. O. Box 9764
El Paso 87, Texas

Standard Oil Company of Texas
P. O. Box 20002
El Paso 98, Texas
Attn. Refinery Manager

IN WITNESS WHEREOF the parties have caused this instrument to be executed by their duly authorized representatives the day and year first above written.

INTERNATIONAL UNION OF
OPERATING ENGINEERS
LOCAL NO. 552

D. W. Jones, President

R. K. Anderson, Secretary

STANDARD OIL COMPANY OF TEXAS

C. W. Kitto, Refinery Manager

EXHIBIT "A"

REFINERY CLASSIFIED LABORATORY, OPERATING AND MECHANICAL

WAGE SCHEDULE

OPERATING DIVISION

Classification	Symbol	Hourly Rate	Daily Rate
Head Operator A	HOA	$3.56	$28.48
Head Operator B	HOB	3.44	27.52
Head Operator C	HOC	3.31	26.48
Operator A	OA	3.19	25.52
Operator B	OB	3.01	24.08
Operator C	OC	2.70	21.60

MAINTENANCE DIVISION

Senior Mechanic	SM	$3.44	$27.52
Mecanic A	MA	3.31	26.48
Stockman A	SA	3.31	26.48
Mechanic B	MB	3.01	24.08
Stockman B	SB	3.01	24.08
Helper A	HA	2.79	22.32
Stockman Helper A	SHA	2.79	22.32
Helper B	HB	2.59	20.72
Stockman Helper B	SHB	2.59	20.72
Helper C	HC	2.37	18.96
Laborer	L	2.08	16.64

CHEV B8 7180

FILLING AND SHIPPING

Finished Stock Gauger		$3.01	$24.08
Carloader Senior		3.01	24.08
Carloader A		2.79	22.32
Carloader B		2.59	20.72
Helper C	HC	2.37	18.96

LABORATORY

Technician A	TA	$3.16	$25.28
Technician B	TB	3.00	24.00
Technician Helper A	THA	2.85	22.80
Technician Helper B	THB	2.78	22.24
Bottlewasher	BW	2.37	18.96

Shift workers who work any time other than day shift will receive, in addition to the above rates, 8c an hour for the afternoon shift, or 16c an hour for the morning shift.

For all shifts of day workers starting or ending outside the hours of 7:00 a.m. to 5:30 p.m., and for all overtime hours worked, the applicable shift differential shall be paid. Applicable shift differentials are as follows: 8c an hour from 4:00 p.m. until midnight, and 16c per hour from midnight until 8:00 a.m.

Mechanic Helpers enrolled in the Mechanic Training Course and making satisfactory progress shall receive, in addition to the Helper rate and any applicable shift differential an achievement training differential of $0.50 per day after one (1) year from the date of enrollment, and $1 per day after two (2) years from the date of enrollment.

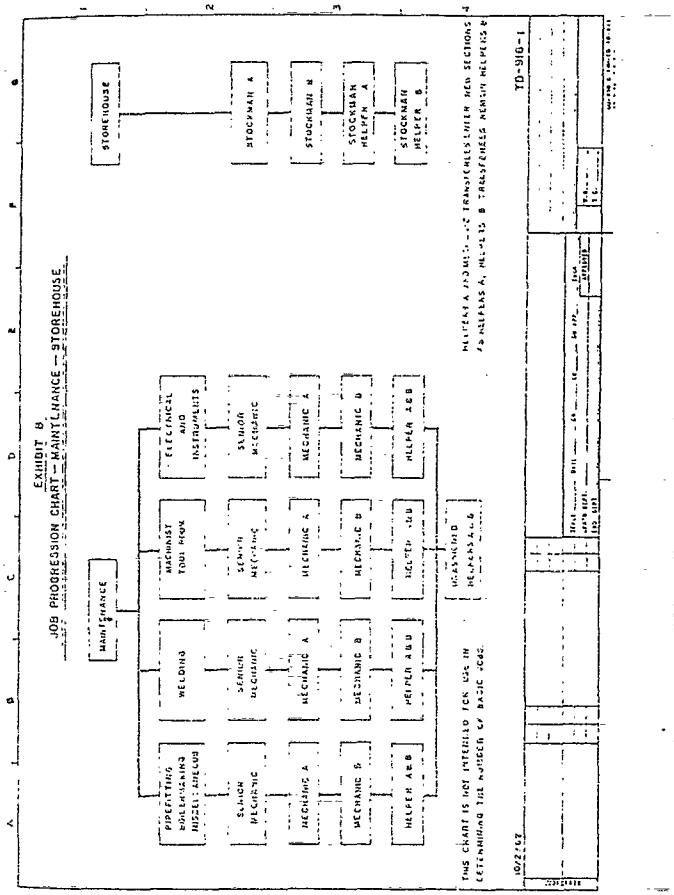

CHEV B8 7181

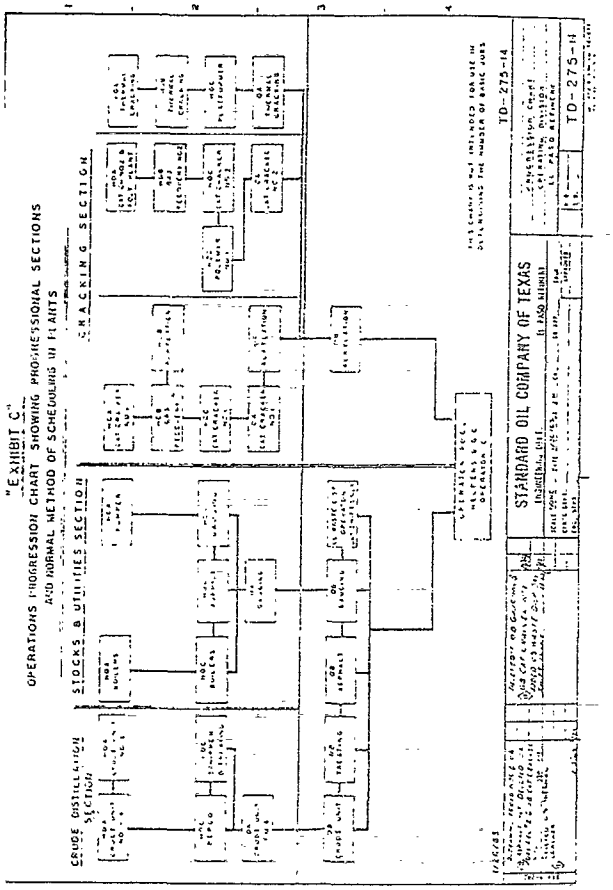

EXHIBIT "C"

PROGRESSION & TRANSFERS WITHIN THE OPERATING DIVISION

1. All men hired for Operations will be hired at the Helper "C" rate. This rate will be effective for a period of twenty (20) work days, except in cases where men have become qualified and work an OB job in less than twenty (20) work days, the OB rate will then be paid for any OB work performed.

2. After the initial twenty (20) day work period, if the man is not working in an OB classification, he will be advanced to the Helper "B" rate.

3. After having worked in an OB classification, thereafter a man will be paid at the rate of his basic classification or at the rate of the classification in which he works, whichever is higher. An employee's basic classification or assignment is the classification in which he would be working full time provided there were no absences in classifications above for any reason. Swing jobs in all cases are basically classified at the lower of the two swing classifications.

4. For all periods of break-in or other training work, he will be paid at the rate of the classification at which he is breaking in or the rate of the classification in which he would have been working, whichever is higher. For the purpose of further training an employee in the next higher classification as a refresher.

CHEV B8 7182

a man in the higher classification may be assigned a job in the next lower classification, and the man in the next lower classification assigned a job in the next higher classification.

5. During periods when there is a temporary surplus of Operating manpower, operators may be required to work in the Maintenance Division. During this period they will be paid at the Helper "B" rate during their first year of refinery service, and the OC rate after their first year of refinery service, if their basic assignment is in the Operator Pool, and will be paid at the rate of their basic assignment if their basic assignment is OB or higher.

6. Permanent vacancies at the OB level will be filled by seniority from the Operator Pool. After receiving a basic assignment of OB in the Cracking Section below the OA level, or the combined progressional sections in the Light Oil Division below the OA level, a man will remain in the assigned section except that during the month of November each year he may request, in writing, a transfer to the other progressional secton and receive a new basic OB assignment below the OA level, according to seniority, as soon thereafter as he is able to qualify by ability to hold such basic assignment.

7. Men will be promoted to fill permanent OA vacancies (Crude Distillation, Stocks & Utilities or Cracking) from the OB level in the progressional section to which he is assigned, according to seniority and ability. After a man

accepts a permanent basic assignment of OA in one of the three progressional sections, he will progress by seniority and ablity only in that section. In the event he wishes to transfer to another section, he may do so at any time by making a written request to the Company and by taking a basic assignment (OB) just under the youngest basically assigned OB in that particular progressional section, and progress in this relative posiiton.

8. Temporary vacancies of not more than thirty (30) calendar days duration occasioned by illness, vacations, leaves of absence, etc. will be filled in one of the following manners:

a. An operator from the Operator Pool will be assigned to the OB job in the plant in which the vacancy is to occur. Then the senior men on shift in the plant will move up from the classification in which they are scheduled (as indicated by the progression chart which is part of this exhibit) if they are qualified to work the job. If, at some level there is an operator who is not qualified to work the next higher job, a junior man—if qualified—will be used to fill the vacancy.

b. By an operator, on the shift on which the vacancy occurs, who is qualified to relieve any job that will provide relief for the vacancy.

c. By schedule changes to be made to provide adequate qualified men.

9. Schedule changes shall be made if necessary to assure that the senior qualified man

CHEV B8 7183

in each basic classification in each progressional section shall, over a period of one contract year, receive substantially more shifts of work in the next higher classifcation than any junior man in the same basic classification in the same progressional section.

10. In event of an anticipated vacancy in excess of thirty (30) calendar days in an established basic job due to reasons such as extended illness, leaves of absence or special assignments, such vacancies will be filled in accordance with the procedure used in filling permanent vacancies, without changing basic classifications.

11. Permanent vacancies—Promotions to fill any job, above the OB level, when such job is permanently vacated, will be in accordance with seniority and ability. If a man is offered and turns downs a basic OA job in either progressional section in the Light Oil Division, he shall not—at a later date—go ahead of the junior man that accepted the job. If there is a vacancy in the classification at a later date, and he elects to accept it, he will take a position below the last man that filled a basic OA job and thereafter advance in that relative position.

12. An operator who is not promoted according to the articles of this agreement, because of a written request by him or due to his lack of ability, may be retained on an assignment that he can handle satisfactorily, but thereafter he shall not be considered for promotion, nor shall he be entitled to fill a temporary vacancy in a higher classification.

13. Lateral movement between jobs within a progressional section will be made at reasonable intervals when such movement is desirable from the viewpoint of the Company. Such movement will be done consistent with operating requirements.

14. All men at all levels within a plant shall be required to learn the next higher job in their respective plant as rapidly as possible. The Company shall aid every man as much as possible in this endeavor.

CHEV B8 7184