AMERICAN STANDARD

GWP GAS BOILER

INSTRUCTION MANUAL

PACKAGED BOILERS

CERTIFIED BY AMERICAN GAS ASSOCIATION

NOTICE TO INSTALLER AND OPERATOR
THIS BOOKLET MUST BE AFFIXED ON OR ADJACENT TO THE HEATING EQUIPMENT.

PLAINTIFF'S EXHIBIT

ASI-423

FORM NO. BP-31407

SERIES NO 18-J1

TO THE OWNER:

The American-Standard Boiler which has been installed for you is the heart of your hydronic heating system. Its design represents advanced engineering and manufacturing techniques to produce a product which will provide you with heating comfort at the lowest operating and maintenance cost. The sections are made of cast iron which is well known for its long life and corrosion resistant properties. When hot water is used as a heating medium, the entire system is filled with water and an expansion tank provides space for the increased volume as the water in the system expands when it is heated. Under no conditions should any boiler be fired unless it is properly filled with water. If a boiler is not in use during the winter season it must be drained or otherwise protected against freezing temperatures.

A gas fired boiler uses gas as a fuel. The chemical composition of natural gas is similar to gasoline which is used as the fuel in an automobile engine. The toxic nature of automobile exhaust fumes is well known. These fumes are toxic because the hydrocarbon fuel is not completely burned. In a properly adjusted and normally operating gas fired appliance such as a kitchen range, boiler, water heater, etc., the hydrocarbon fuel is burned completely, producing harmless combustion by-products, and these products are normally vented to the outside atmosphere. Normal prudence will dictate that the venting system and combustion process of any gas fired appliance be checked periodically to assure that normal operation is taking place. Any abnormalities in combustion or venting of flue products to the outside atmosphere should be promptly corrected.

By following the suggestions contained in this manual, you can assume your boiler will function properly for many years. Should any problem arise, contact your nearest American-Standard contractor, whose name can be found in the "yellow pages" of your telephone directory.

AMERICAN STANDARD, INC.

Information relative to the rating and fuel requirements is located on the rating plate mounted on the front of the boiler. Please refer to this information and include model number and series number when ordering replacement parts.

NOTE: All parts of this boiler have been carefully inspected and packed. See packing and parts list sheet for details.

In case of shortage, make sure that all parts have been removed from shipping container and examine packing material thoroughly. If parts cannot be found, report shortage to your dealer, giving boiler size, series number, date, inspector's number and packer's number (See PARTS LIST and packer's check ticket).

TABLE OF CONTENTS

ITEM	PAGE NO.
GENERAL INFORMATION	1
SETTING THE UNIT	1
AIR SUPPLY	2
CHIMNEY	2
GAS PIPE SIZE AND DELIVERY SCHEDULE	3
RATINGS DATA	3
CONTROL TAPPINGS	4
PIPING RECOMMENDATIONS	4
DIMENSIONS FOR INLETS AND OUTLETS	5
UNPACKING	10
WIRING DIAGRAMS	11 & 12
FILLING SYSTEM	13 & 14
LIGHTING INSTRUCTIONS	15, 16, & 17
MANIFOLD PRESSURE ADJUSTMENT	19
PILOT ADJUSTMENT	19
MAIN BURNER AIR ADJUSTMENT	19 & 20
GENERAL MAINTENANCE	21
INSPECTION AND CLEANING OF BOILER	22

In utility room installations, the door shall be wide enough to allow the largest part to enter or to permit the replacement of another appliance such as a water heater.

COMBUSTION AIR AND VENTILATION

Adequate facilities must be available for providing air for combustion and ventilation. Except for installations in large spaces (such as full basements) where infiltration can normally be assumed to provide sufficient air, this will usually necessitate:

(a) Two openings to interior space having adequate infiltration from the outside, one near the floor, the other near the ceiling, installed in the door or a single wall of the boiler room. Each opening must have a minimum free area of one (1) square inch per 1000 Btu per hour of input rating of all appliances in the room.

(b) Additional opening to exterior space when combustion air must be obtained from outside, minimum free area of 1 square inch per 5000 Btu per hour of input rating, or in accordance with the methods outlined in the latest issue of A.N.S. Z21.30 entitled "Installation of Gas Appliances and Gas Piping".

CHIMNEY

1. Flue or vent connection to chimney or breeching shall not be smaller than the outlet on the drafthood.

2. Where two or more appliances vent into a common flue, the area of the common flue should at least equal the area of the largest flue or vent connector plus 50% of the areas of the additional flue or vent connectors.

3. Flue or vent connector must be inserted into, but not beyond, the inside of the chimney flue.

4. Horizontal runs of flue pipe should be kept at a minimum and should pitch upward from the boiler at least 1/4" per foot.

PIPE DELIVERY SCHEDULE			
Capacity Of Pipes In Cubic Feet Of Gas Per Hour. Based on a pressure drop of 0.3 in. W.C. and 0.6 specific gravity gas.			
Length of Pipe In Feet	Pipe Size		
	3/4"	1"	1-1/4"
10	278	520	1050
20	190	350	730
30	152	285	590
40	130	245	500
50	115	215	440
70	96	180	370
100	79	150	305

Boiler Number	SIZE OF GAS CONNECTION	
	Natural Gas	Propane
GWP-5	3/4	1/2
GWP-6	3/4	1/2
GWP-7	3/4	3/4

TABLE 1 - GAS PIPE DELIVERY SCHEDULE AND CONNECTIONS

TABLE 2 - RATINGS FOR NATURAL AND PROPANE

Boiler Number	A.G.A. Input Btu/Hr.	A.G.A. Output Btu/Hr.	Net Installed Radiation Mbh Water
GWP-5	264,000	211,200	183.5
GWP-6	330,000	264,000	229.6
GWP-7	396,000	316,800	275.7

I=B=R APPROVED

A.G.A. DESIGN CERTIFIED

06572

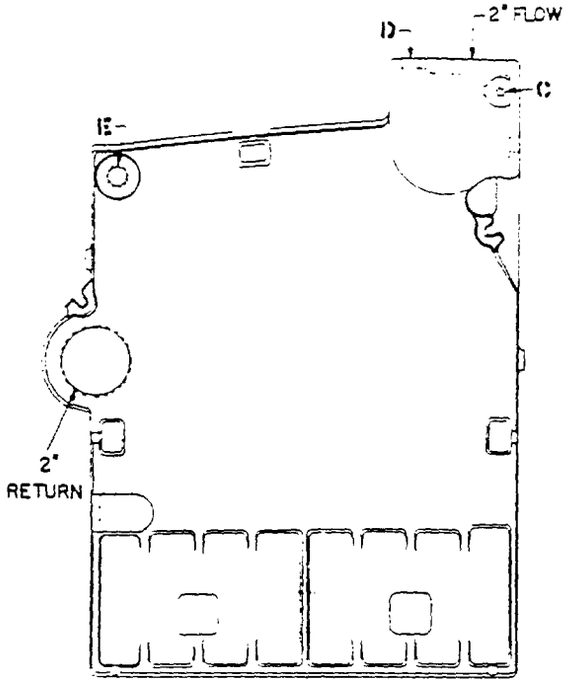

LEFT SIDE VIEW

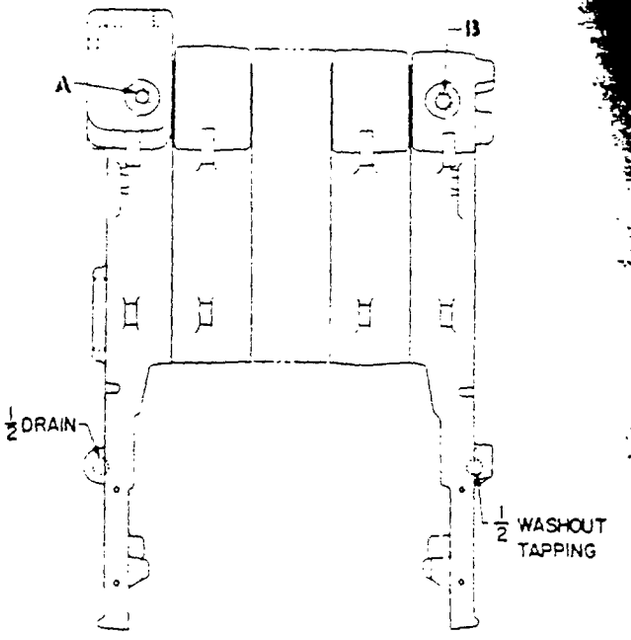

FRONT VIEW

SECTION ASSEMBLY SHOWING TAPPINGS

FIG. 1

CONTROL APPLICATION		
LOCATION ON BOILER	SIZE OF TAPPING	CONTROLS
A	½	LIMIT CONTROL
B	½	AUXILIARY LIMIT CONTROL OR OPERATING CONTROL
C	¼	TEMPERATURE AND PRESSURE GAGE
D	¾	EXPANSION TANK
E	¾	PRESSURE RELIEF VALVE

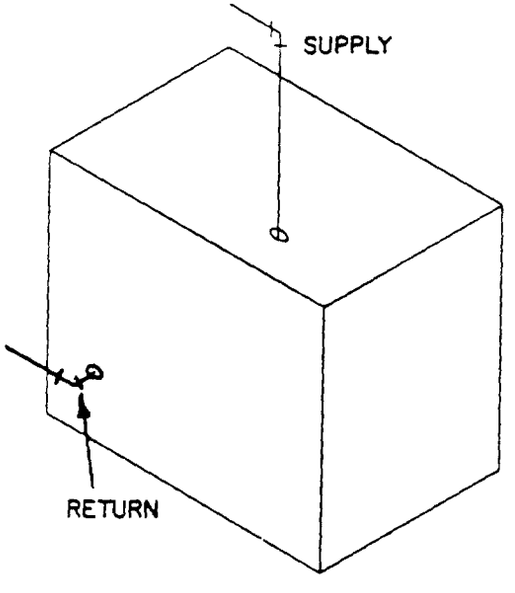

BOILER NUMBER	SUPPLY (IN)	RETURN (IN)
GWP-5	1½	1½
GWP-6	1½	1½
GWP-7	2	2

MINIMUM PIPING RECOMMENDATIONS FORCED HOT WATER

FIG. 2

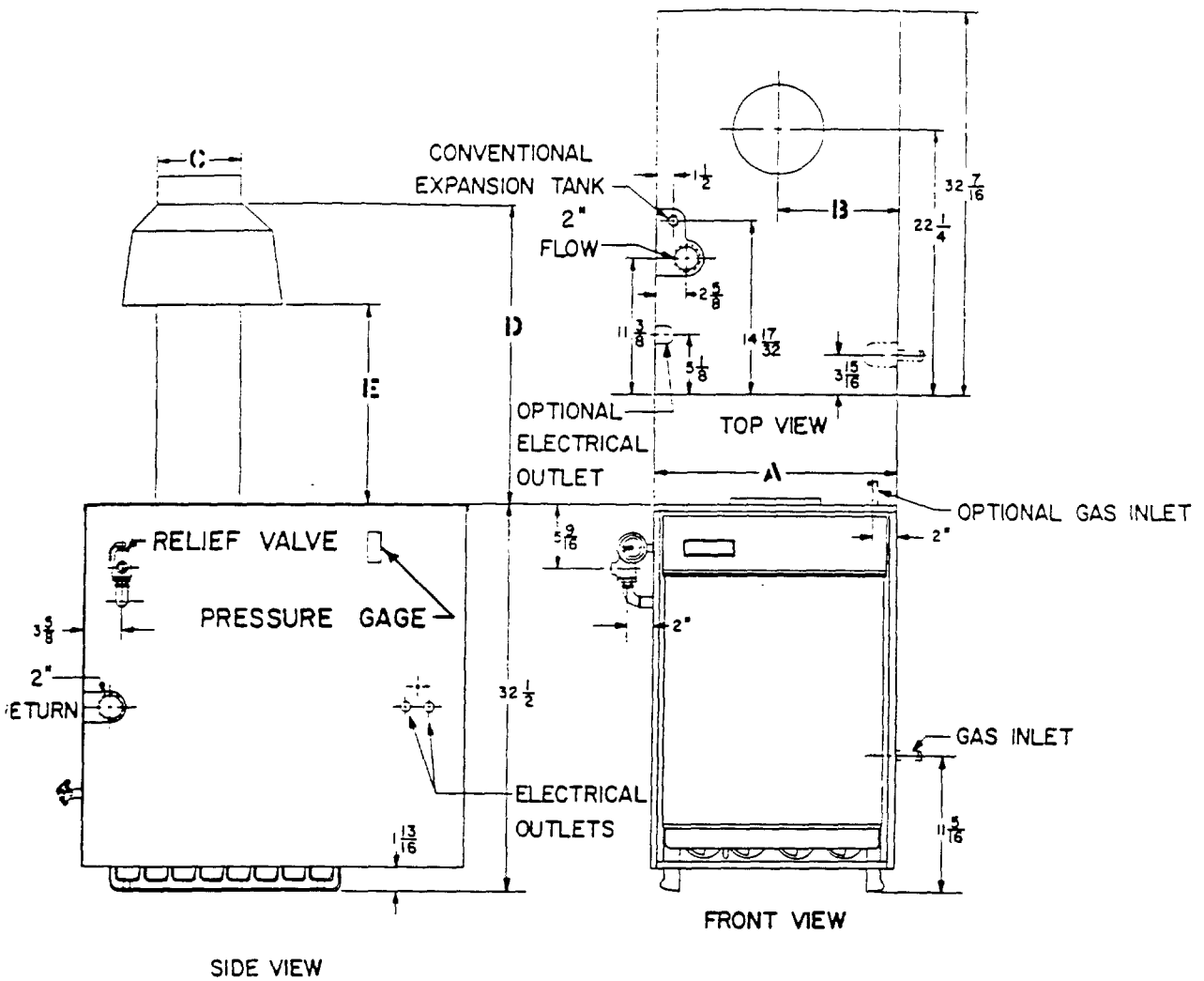

BOILER NO.	NO. OF SECTIONS	NO. OF BURNERS	DIMENSIONS A	B	C	D	E	WATER CONTENT IN GALLONS	FLUE DIAMETER (INCHES)	FLUE HEIGHT ABOVE DRAFT HOOD (FT.)	GAS CONNECTIONS NAT.	LP
BWP-5	5	4	20"	10"	7"	24 11/16	16 1/2	6.9	7	10	1/2	1/2
BWP-6	6	5	23 1/2	11 7/8	8"	27 1/16	19	13.0	8	10	3/4	1/2
BWP-7	7	6	27 1/2	13 3/4	8"	27 1/16	19	15.0	8	10	3/4	3/4

FIG. 3 - DIMENSIONS FOR INLETS AND OUTLETS

RECOMMENDED PIPING WHEN AUX. MANUAL SHUTOFF VALVE OR SEPARATE MANUAL SHUTOFF VALVE AND AUTOMATIC GAS VALVE ARE SUPPLIED.

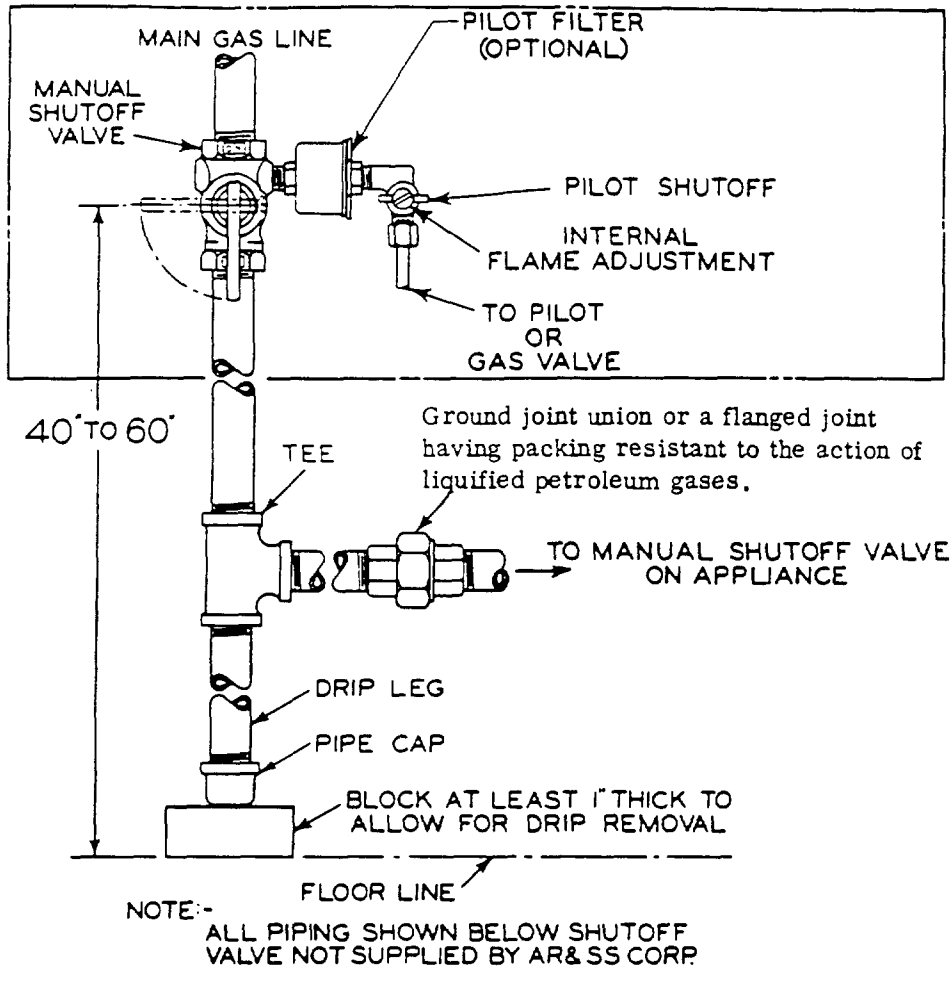

FIG. 4

RECOMMENDED PIPING FOR DRIP LEG CONNECTION TO BOILER

GWP BOILER WITH ELIMINAIRE

The ELIMINAIRE is a unique built-in air separator which prevents air from being transmitted to the system and directs the air to the compression tank. External air separators such as dip tube or inlined accessories are not required. This important feature on the L. H. END SECTION also allows for considerable simplification of the near boiler piping (See Figure Below) and assures positive air separation essential to proper system performance. The ELIMINAIRE plus the recommended piping provides for a substantial saving in material and installation cost.

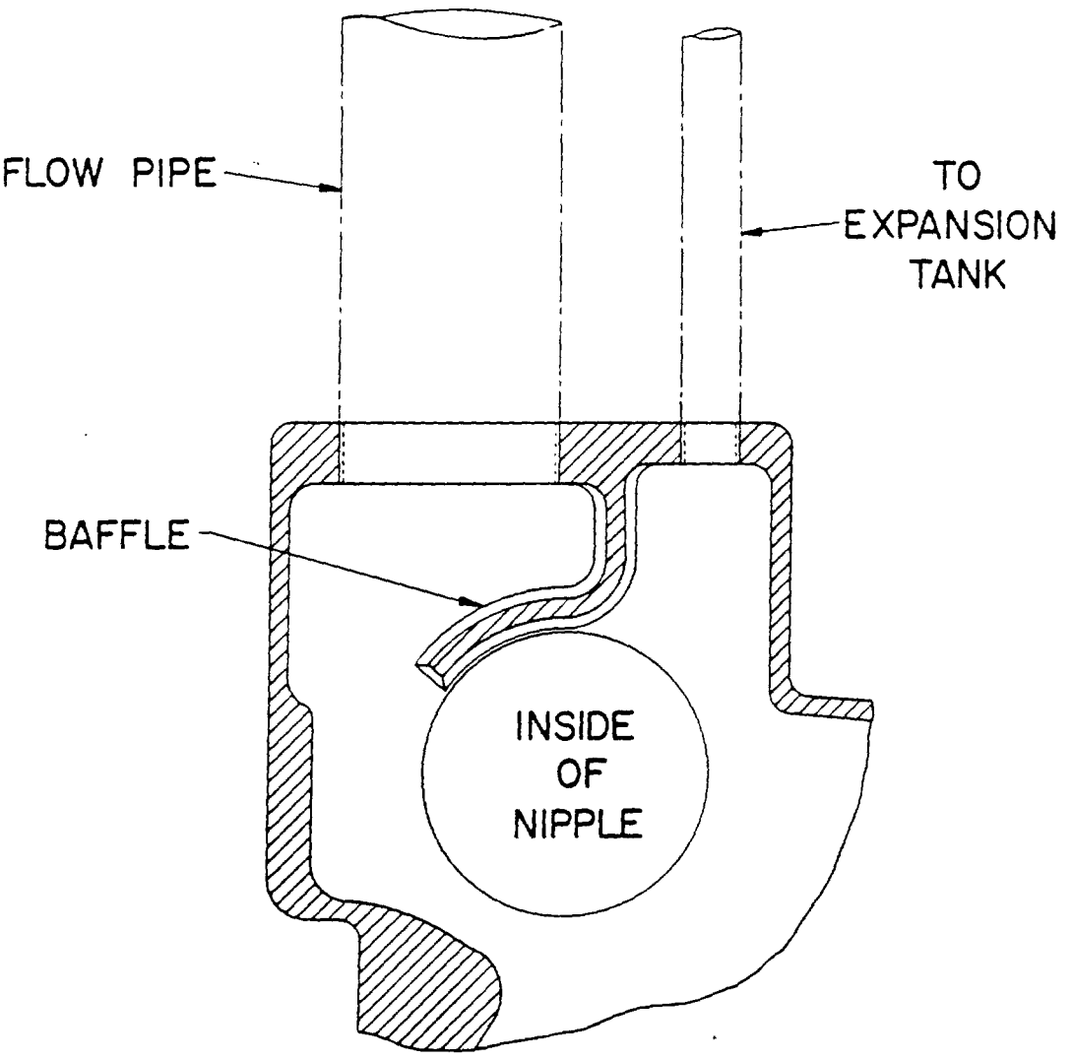

PIPING FOR FLOW PIPE & EXPANSION TANK

FIG. 5

CAUTION

If and when this boiler is used in connection with refrigeration systems, boiler should be so installed that chilled medium is piped parallel with the heating boiler using appropriate valves to prevent the chilled medium from entering the heating boiler.

When hot water heating boilers are connected to heating coils located in air handling units, where they may be exposed to refrigerated air circulation, such boiler piping system shall be equipped with flow control valves or other automatic means to prevent gravity circulation of the boiler water during the cooling cycle.

The expansion tank should not be set in a cold or an exposed place. If the pipe leading to or from the tank freezes, serious damage may result. If valve of any description is installed in the piping leading to or from the expansion tank BE SURE THAT IT IS OPEN WHILE THE BOILER IS IN OPERATION.

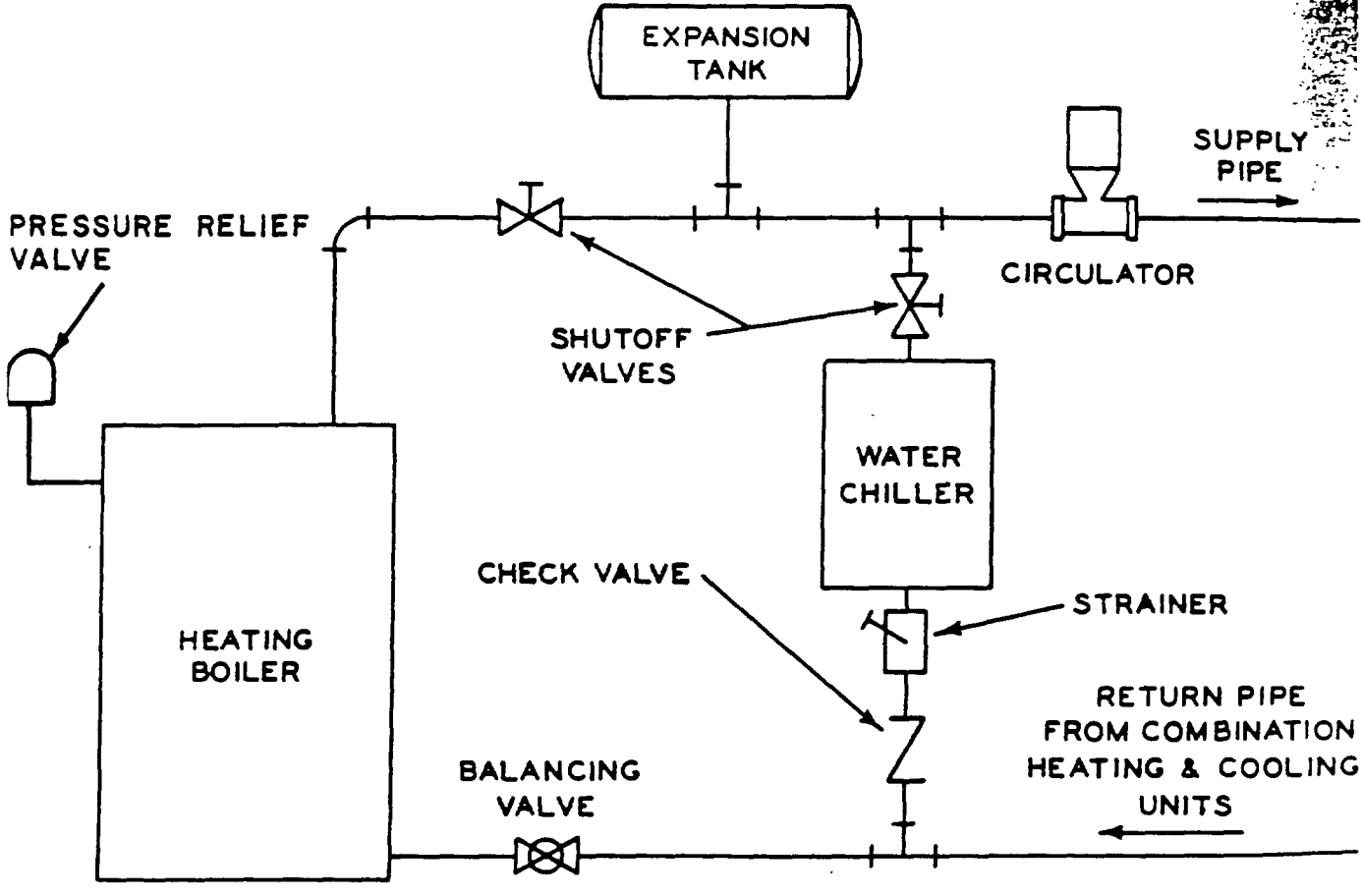

RECOMMENDED BOILER PIPING FOR COMBINATION HEATING & COOLING UNITS

FIG. 6

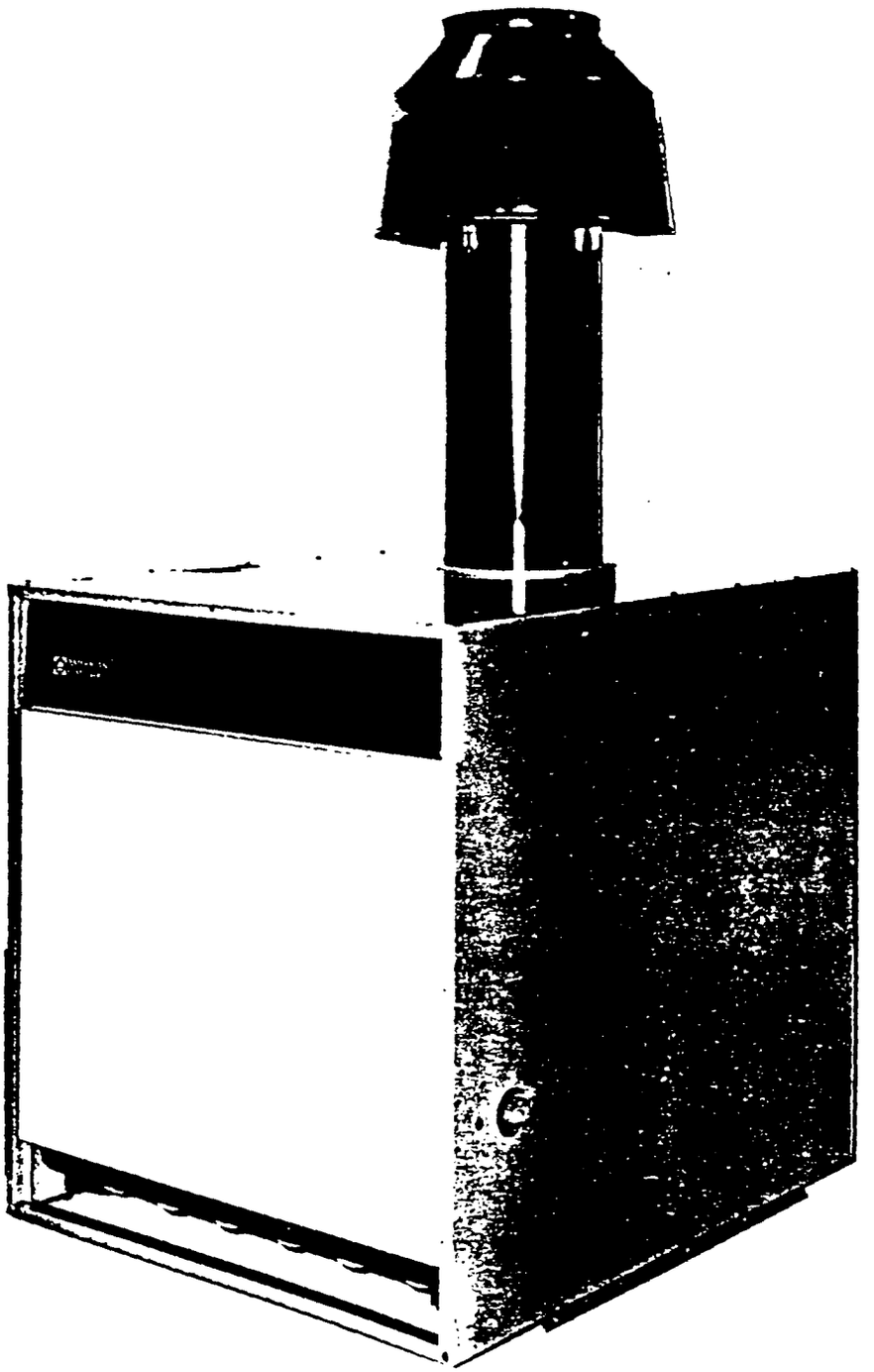

FIG. 7
GWP BOILER ASSEMBLY

BOILER INSTALLATION

Packaged boilers are shipped factory assembled and crated. Installation should be accomplish as follows:

UNPACKING BOILER (See Fig. 8)

Place the boiler in approximate final location, if possible, before removing the shipping crate.

1. Unfasten all crating wire at the corner of the crate.
2. Remove nails fastening crate sides to top and bottom of crate. Lift off the crate top and unwrap crate side from crate base. Remove the plastic bag.
3. Remove blocking which holds burners in place and which supports burners.
4. Loosen four cap screws that hold boiler to the crate base, one at either side of end sections, just under the jacket. Remove both screws at one end section so that the two remaining screws can be slid out of the slots in the other end section. Move the boiler off the crate base to the final location.

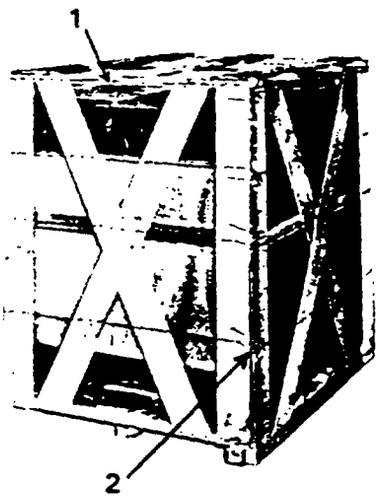

FIG. 8 - Crated Boiler
1. Nails
2. Side Fasteners

Floor should be level where the boiler is installed.

Install gas piping including drip leg connection to boiler (refer to Table 1, page 3)
All pipe joints must be made using compound resistant to propane gas.

Install water supply and return lines (refer to pages 4, 5, 7, & 8)
A full sized discharge pipe from the relief valve to drain is recommended.

Make electrical connections (refer to Figs. 9 and 10)

Install vent pipe and external drafthood (Refer to Figs. 3 and 7)

Fill system (refer to pages 13 and 14)

Test water system for tightness. Check all gas piping joints for leakage by using a soapsuds solution before operating unit.

Light boiler (refer to pages 15, 16, and 17)

Make final burner adjustment and check out controls (refer to pages 19 and 20)

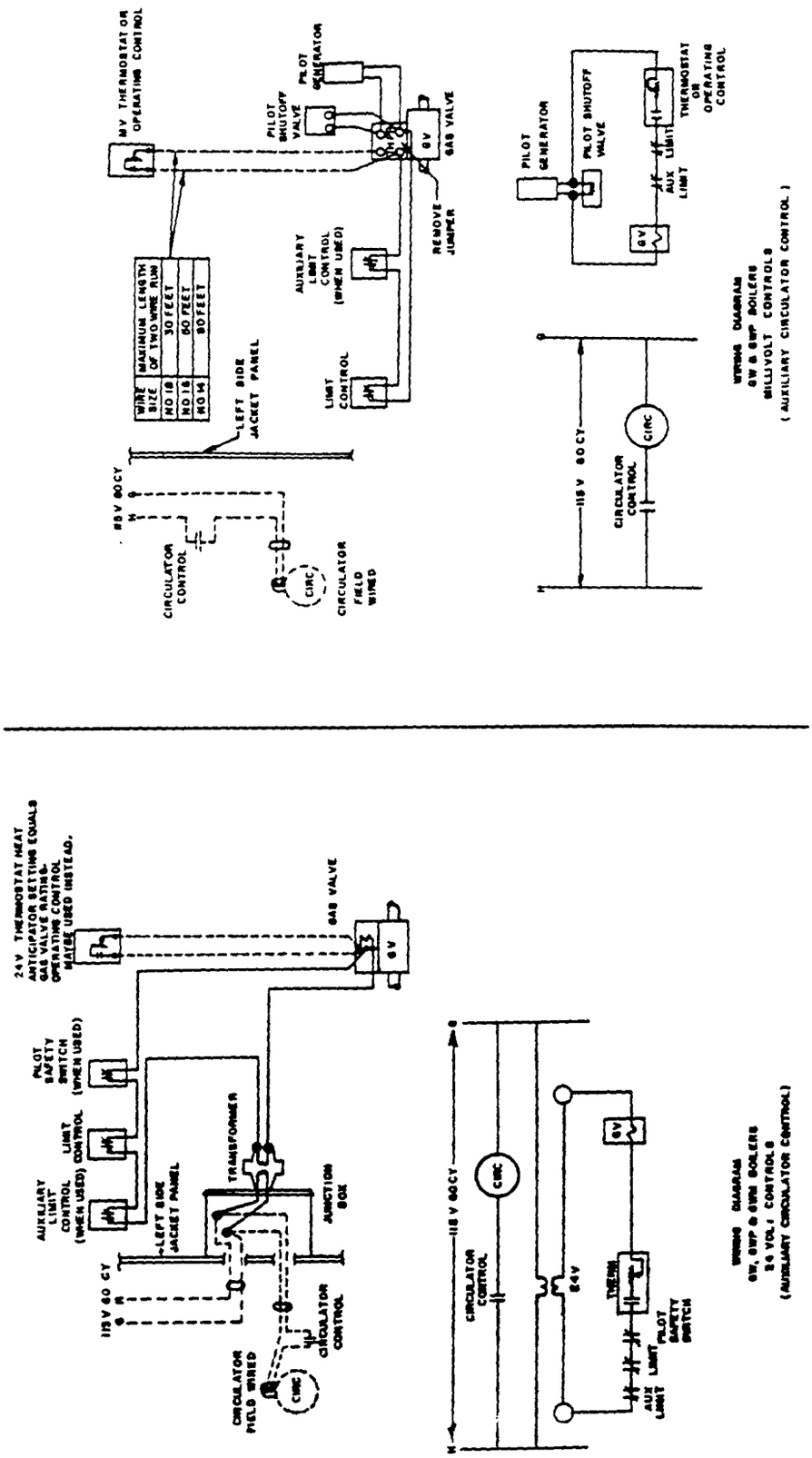
24V THERMOSTAT OR OPERATING CONTROL
PILOT GENERATOR
PILOT SHUTOFF VALVE
GV
GAS VALVE
REMOVE JUMPER
AUXILIARY LIMIT CONTROL (WHEN USED)
LIMIT CONTROL
WIRE SIZE
MAXIMUM LENGTH OF TWO WIRE RUN
NO 18
30 FEET
NO 16
60 FEET
NO 14
80 FEET
LEFT SIDE JACKET PANEL
115 V 60 CY
CIRCULATOR CONTROL
CIRC
CIRCULATOR FIELD WIRED
THERMOSTAT OR OPERATING CONTROL
AUX LIMIT
WIRING DIAGRAM
GW & GWP BOILERS
MILLIVOLT CONTROLS
(AUXILIARY CIRCULATOR CONTROL)

24 V THERMOSTAT HEAT ANTICIPATOR SETTING EQUALS GAS VALVE RATING. OPERATING CONTROL MAYBE USED INSTEAD.
GAS VALVE
GV
PILOT SAFETY SWITCH (WHEN USED)
LIMIT CONTROL
AUXILIARY LIMIT CONTROL (WHEN USED)
LEFT SIDE JACKET PANEL
TRANSFORMER
JUNCTION BOX
115 V 60 CY
CIRCULATOR CONTROL
CIRCULATOR FIELD WIRED
CIRC
24 V
THERM
AUX LIMIT
PILOT SAFETY SWITCH
WIRING DIAGRAM
GW, GWP & GWH BOILERS
24 VOLT CONTROLS
(AUXILIARY CIRCULATOR CONTROL)

FIG. 9

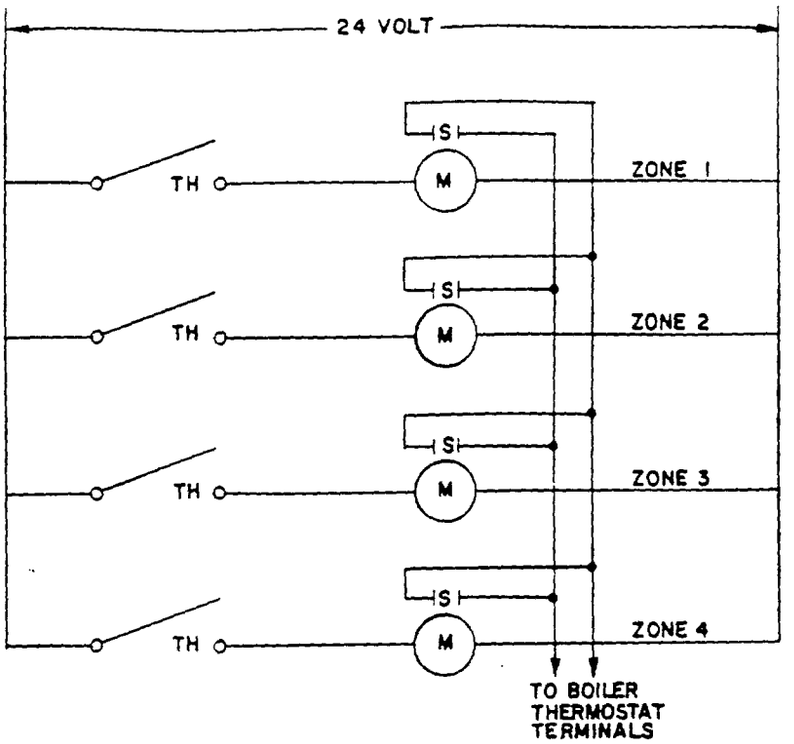

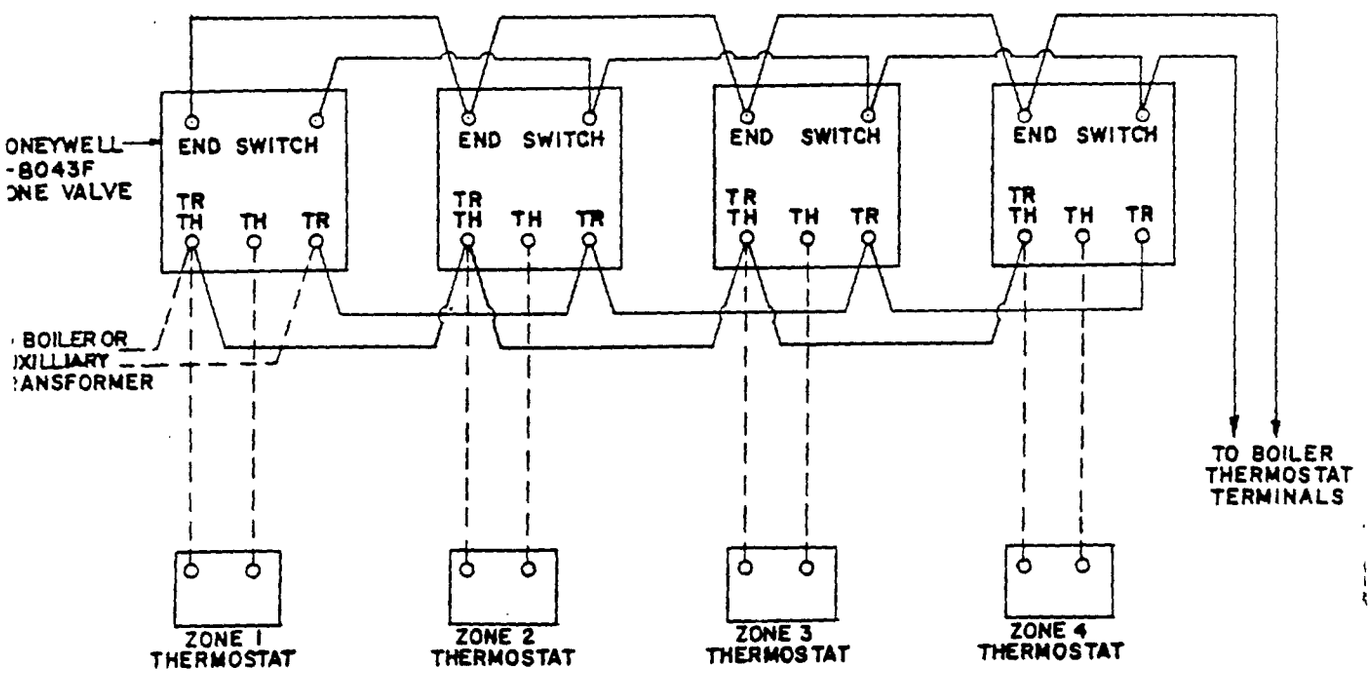

NOTE: WIRES MUST CLEAR THE MANUAL OPENING LEVER OF EACH ZONE VALVE AND ALL LEVERS MUST BE FACTORY PRESET IN THE "MAN OPEN" POSITION PRIOR TO PACKING.

ZONE VALVE WIRING DIAGRAM
FIG. 10

FILLING SYSTEM(GENERAL INFORMATION)

CAUTION: Never start boiler unless it is properly filled. After boiler is in operation make-up water should be added slowly.

When filling a system, the pressure must not exceed 50 lbs. If it does, it must be relieved immediately and the relief valve failure investigated and corrected, otherwise pressure may build up and cause damage to heating system.

The owner should occasionally check the readings on the press-temp gauge. The higher range scale indicates the water temperature within the boiler; and, should the water exceed 250°F, operation must be discontinued until the system is checked and the fault corrected. The lower range scale indicates the pressure within the system and should not exceed 50 lbs. (100 lbs. with 100 lb. relief valve).

In a closed system the boiler and piping are entirely filled with water except for a cushion of air in the upper portion of the expansion tank. When the water is heated, it expands, compressing the air. If, for any reason, this air were completely displaced from the tank, there would no longer be a cushion. In that event an increase in water temperatures would cause a corresponding increase in volume and pressure would force the relief valve open to discharge the excess volume. To correct such a condition, the expansion tank must be drained enough to permit the tank to fill with air.

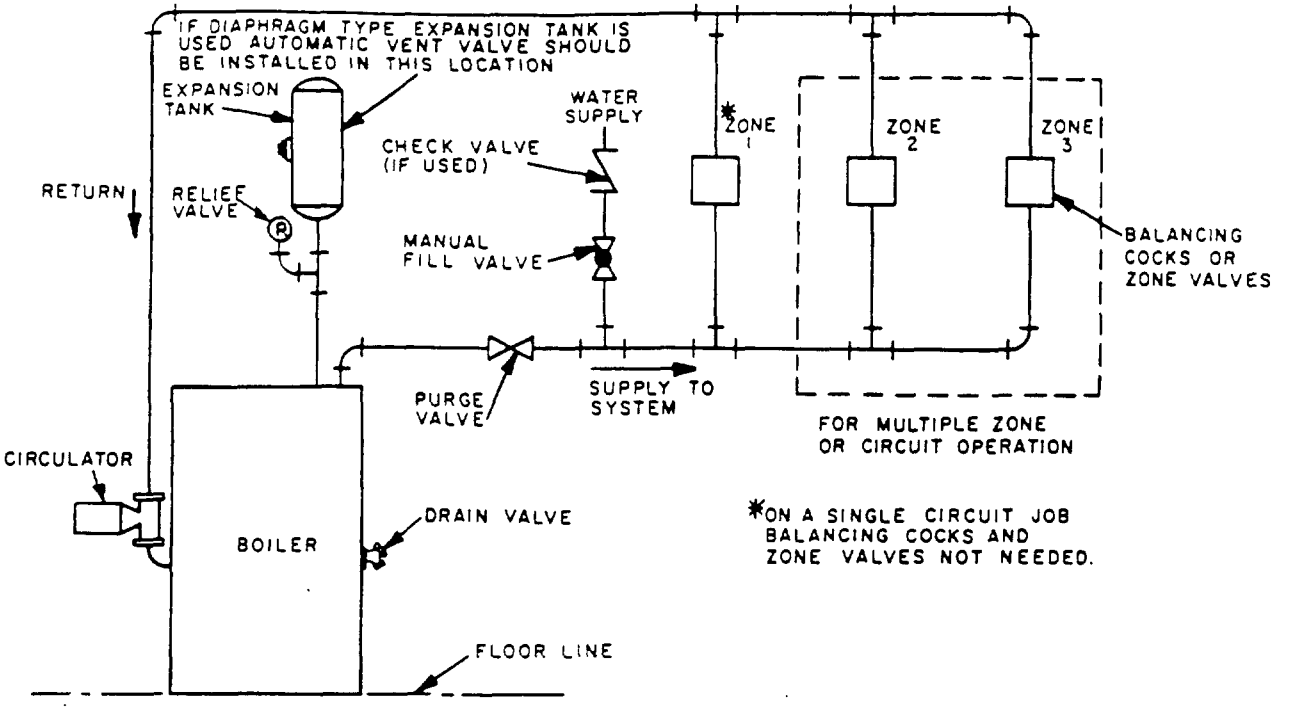

FIG. 11

FILLING SERIES LOOP SYSTEM

The following procedure should be used to fill a series loop Heatrim system (See Fig. 11)

1. Close all zone valves except the one for the zone to be filled with water and purged of air.
2. Open the drain valve on the boiler.
3. Open the fill valve.
4. Close the purge valve.
5. Open the relief valve.
6. Open the valve to the second zone to be purged; then close the first. Repeat this step until all zones have been purged of air and filled with water; but always have one zone open. (Zones are purged and filled when water can be felt in the pipe at the end of the zone.)
7. Close the drain valve.
8. When water appears, release the lever on the relief valve, allowing it to close.
9. Continue filling the system until the pressure gauge reads 12 psi without heat or 25 psi at 200°F; close the fill valve.
10. Open the purge valve.

Following the completion of the installation, a thorough check should be made of the entire hydronic system to locate possible leaks.

NOTE: For a single loop Heatrim system no additional vents, cocks, valves or other accessories are required.

PIPING ARRANGEMENT AND LIGHTING INSTRUCTIONS

24 VOLT SYSTEM

6 and 7 SECTION - NATURAL GAS

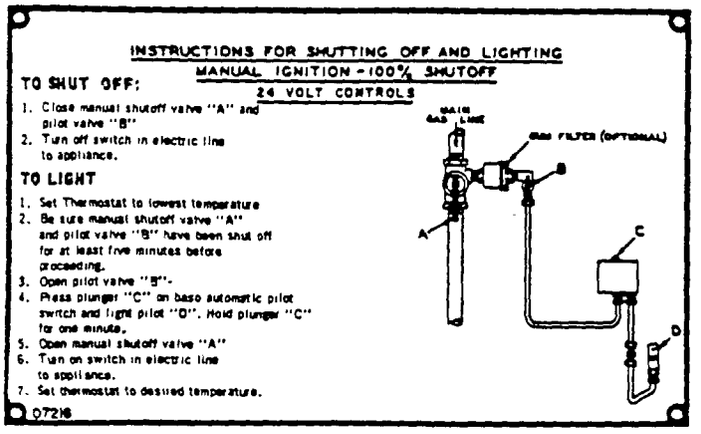

FIG. 12

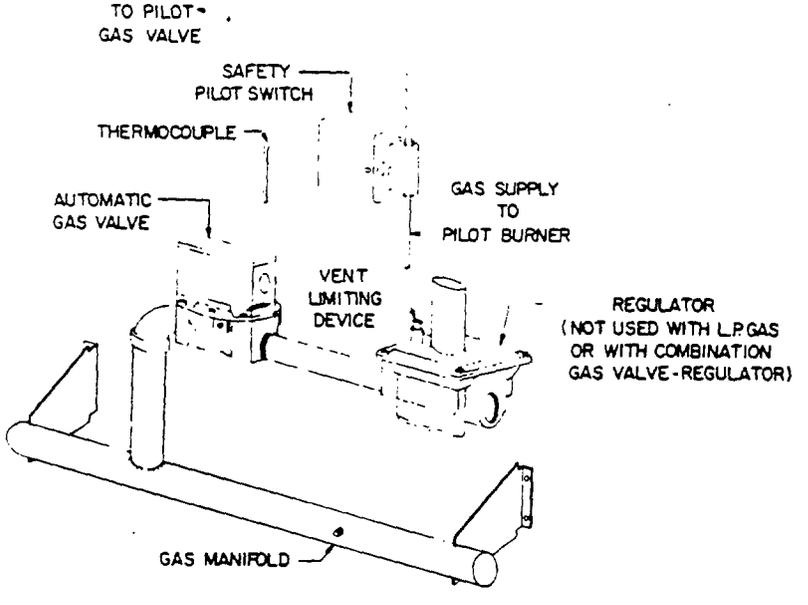

ASSEMBLY OF GAS VALVE AND MANIFOLD - 24 VOLT SYSTEM

FIG. 13

PIPING ARRANGEMENT AND LIGHTING INSTRUCTIONS

S. E. SYSTEM

6 and 7 SECTION - NATURAL GAS

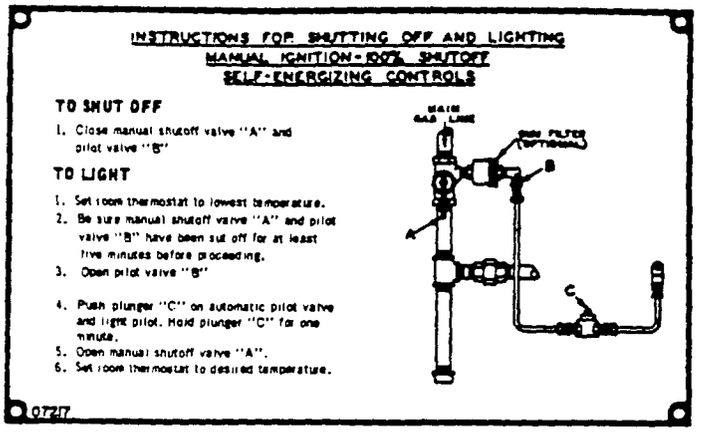

FIG. 14

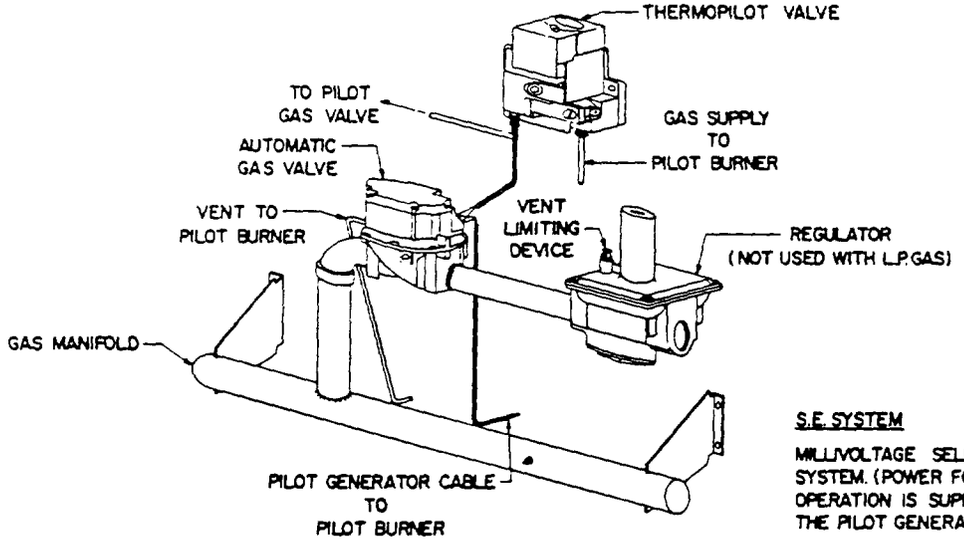

ASSEMBLY OF GAS VALVE AND MANIFOLD S.E. SYSTEM

S.E. SYSTEM

MILLIVOLTAGE SELF-POWERED SYSTEM. (POWER FOR VALVE OPERATION IS SUPPLIED BY THE PILOT GENERATOR.).

FIG. 15

PIPING ARRANGEMENT AND LIGHTING INSTRUCTIONS

24 VOLT AND S. E.

5 SECTION - NATURAL GAS

5, 6, and 7 SECTION - PROPANE GAS (LESS PRESSURE REGULATOR)

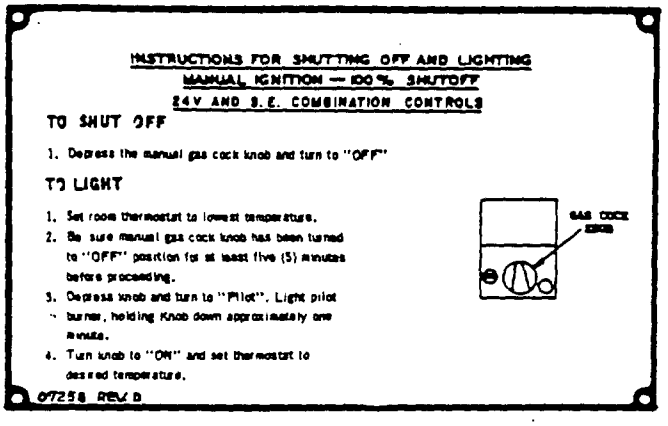

INSTRUCTIONS FOR SHUTTING OFF AND LIGHTING
MANUAL IGNITION — 100% SHUTOFF
24V AND S.E. COMBINATION CONTROLS

TO SHUT OFF

1. Depress the manual gas cock knob and turn to "OFF"

TO LIGHT

1. Set room thermostat to lowest temperature.
2. Be sure manual gas cock knob has been turned to "OFF" position for at least five (5) minutes before proceeding.
3. Depress knob and turn to "Pilot". Light pilot burner, holding Knob down approximately one minute.
4. Turn knob to "ON" and set thermostat to desired temperature.

GAS COCK KNOB

07258 REV D

FIG. 16

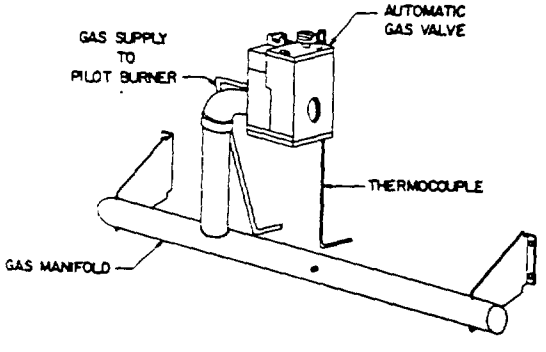

ASSEMBLY OF COMBINATION CONTROL AND MANIFOLD 24 VOLT SYSTEM

COMBINATION CONTROL

COMBINATION AUTOMATIC PILOT, PRESSURE REGULATOR, AUTOMATIC GAS VALVE, AND MANUAL SHUTOFF VALVE.

FIG. 17

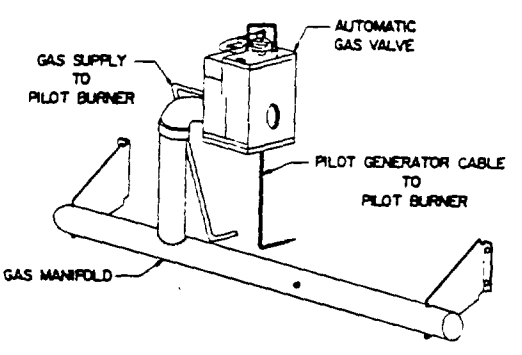

ASSEMBLY OF COMBINATION CONTROL AND MANIFOLD S.E. SYSTEM

COMBINATION CONTROL

COMBINATION AUTOMATIC PILOT, PRESSURE REGULATOR, AUTOMATIC GAS VALVE, AND MANUAL SHUTOFF VALVE.

FIG. 18

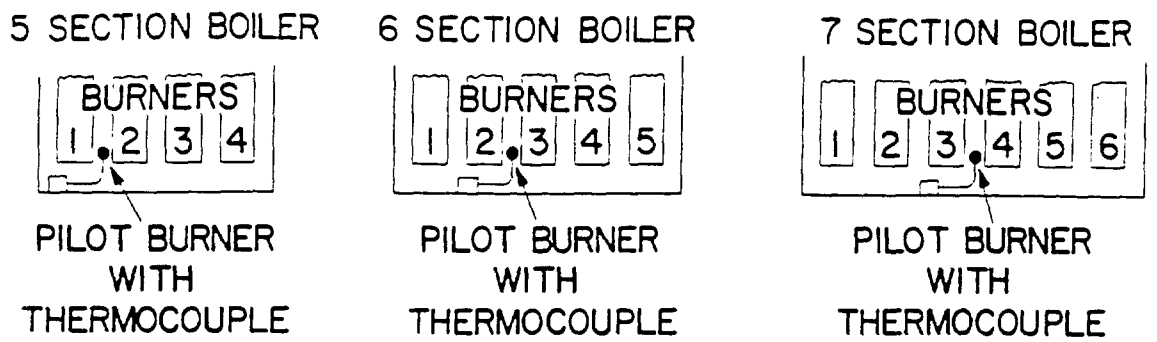

FIG. 19

PILOT LOCATION FOR ALL GASES

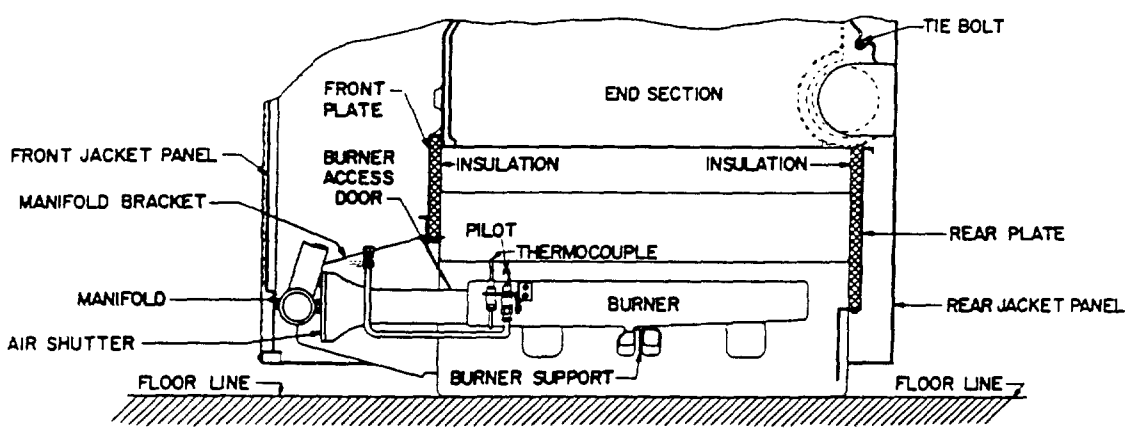

FIG. 20

BURNER AND PILOT ASSEMBLY FOR MANUAL IGNITION

PILOT BURNER

Location and assembly is shown in Figs. 19 and 20.

PILOT ADJUSTMENT

Light boiler as directed in operating instructions and check for gas leaks. Adjust pilot flame to extend over top of burner. Pilot rate adjusting screw is located on combination control or pilot throttling cock.

NORMAL INPUT FOR PILOT BURNERS

	NAT.	PROPANE
Input per Burner Btu/Hr.	1400	1000

MANIFOLD PRESSURE ADJUSTMENT FOR MAIN BURNER INPUT

After boiler is warmed up, shut off all other gas appliances connected to gas meter and time gas consumption. Boiler input should be adjusted at rated input as indicated on nameplate in accordance with procedure outlined below.

$$\text{Gas Consumption (Cubic Feet per Hr.)} = \frac{\text{INPUT RATING (Btu per Hr.)}}{\text{Heating Value of Gas (Btu per Cu. Ft.)}}$$

1/8" pipe plug is placed in the top of the manifold to provide for checking the gas pressure in the manifold with a manometer or small pressure gauge. The manifold pressure should be set at 3.5 inches of water for natural gas. To adjust the pressure, remove the cap on the gas pressure regulator and screw in the adjusting screw to raise pressure or screw out the adjusting screw to lower pressure. Only small variations in gas flow should be made by means of the gas pressure regulator adjustment. In no case should the final manifold pressure vary more than plus or minus 0.3 inches water column from the above specified pressure. Any necessary major changes in the flow should be made by changing the size of the burner orifice. Refer to combination control instruction sheet for making regulator adjustments.

MAIN BURNER AIR ADJUSTMENT

Drill port burners are normally used with natural gas. To adjust the air setting, allow 5 minutes for the burners to heat up; open the air shutter until flame lifts off the burner (too much air), then close until the flame returns to the burner. There should be no yellow in the flame. (Orange appearance is caused by lint and dust particles in air and does not affect normal performance).

Ribbon burners - Propane gas
Propane burner flames must be adjusted properly to prevent excessive burner temperatures. Adjust the air shutter to a blue-green inner flame without yellow in flame. (Refer to Fig. 21)

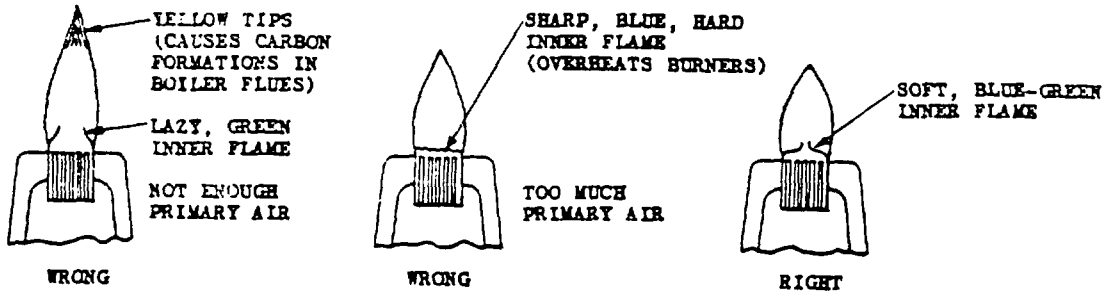

FIG. 21

Ribbon burners - Natural gas
Adjust air shutter to give sharp blue flame with no yellow. For natural gas, good performance is usually obtained with air shutter set to maximum open position.

TEMPERATURE LIMIT CONTROL

The temperature limit control is located in the upper left corner of the control vestibule. The limit control can be checked and adjusted by removing the front door. If replacement is necessary, more ready access is obtained by:

1. Removing jacket top panel screws on each side.
2. Lifting top panel in front only until side panels can be moved outward approximately 1/4 inch allowing upper front panel to be removed.
3. Limit control is now completely exposed for service.
4. Replace panels and screws in reverse order.
5. Set limit control to 220°F or lower, if desired.

MAINTENANCE

GENERAL

IT IS IMPORTANT THAT THIS BOILER BE INSPECTED ONCE A YEAR BY A COMPETENT SERVICEMAN TO INSURE CONTINUED RELIABLE, SAFE OPERATION.

This inspection should include checking of all boiler safety controls, pilot, section flueways and burners. See next page for instructions on burner and section inspection and cleaning.

IN FALL BEFORE STARTING BOILER

Drain system sufficiently to remove sludge in bottom of boiler. Do not drain more water than necessary to remove sludge, then refill to proper level as directed in this manual.

MAINTENANCE OF BOILER WHILE IN OPERATION

Check water level regularly and add water slowly when needed. If water must be added frequently, check system for leaks. This boiler is fired automatically.

IN WINTER WHILE NOT IN OPERATION

Drain entire system to prevent damage from freezing. Drain through drain cocks located at lowest point in system. Be sure boiler is completely drained.

IN SUMMER WHILE NOT IN OPERATION

Keep the system filled as during the heating season. This is the recommended time to have a periodic check up of all safety controls and a close inspection of the burners, flue passageways, and flue pipe. It is also good practice to recheck the input firing rate and the gas air mixture on the burners to see that the boiler is operating at normal efficiency.

GENERAL MAINTENANCE OF HEATING SYSTEM

Keep radiators and convectors clean.

If a hot water radiator is hot at the bottom but not at the top, it indicates that air has accumulated inside and should be vented. To vent radiator hold small cup under air vent (located near top of radiator), open vent until water escapes and then close. Fill hot water systems only as directed in this manual.

If much water is added to system, it is advisable to heat system to a high temperature and vent again. This will make less venting necessary during the winter.

INSPECTION AND CLEANING OF BOILER BURNERS AND FLUEWAYS

For maximum efficiency and safe operation, burners and boiler flue passages should be inspected and cleaned, if necessary, once a year.

Inspection Procedure:

1. Turn manual shutoff valve and pilot shutoff valve to off positions.
2. Remove lower front panel from boiler by lifting upward and pulling out.
3. Remove pilot line, vent line, and thermocouple.
4. Remove the burner access door (See Figure 20).
5. Remove burners by lifting at the rear, sliding them toward the back of the boiler until free of the spuds, and lifting them out over the manifold.
6. Check burner gas ports or ribbons for lint and dirt.
7. Section cleanliness can be checked with a mirror and light inserted in the opening where the burners have been removed.

BURNER CLEANING

If burner inspection reveals rust, scale or lint present, clean as follows:

1. Drilled Port Burner - Pass a #30 or #31 drill through the ports and shake any dislodged material out through the mixing tube.
2. Ribbon Burners - Remove ribbon hold down clamps and then remove ribbons. Separate ribbons by fanning out and clean with wire brush. Reassemble to burner.

SECTION CLEANING

If section inspection reveals soot or scale, clean as follows:

1. IMPORTANT - BE SURE TO REMOVE BURNERS BEFORE PROCEEDING.
2. Remove flue pipe, jacket top, and canopy-drafthood assembly.
3. Clean sections with a wire flue brush.
4. Reassemble, carefully locating all parts.
5. Install burners and light pilot.
6. Check burner air adjustment as directed in this manual.

DEALER'S NAME: _____

ADDRESS: _____

TELEPHONE NO.: _____

DATE OF INSTALLATION: _____

AMERICAN STANDARD

PLUMBING & HEATING DIVISION

40 WEST 40TH STREET • NEW YORK, N.Y. 10018

06592