A-7

oil/stoker/hand-fired boilers

hot water or steam

PLAINTIFF'S EXHIBIT

ASI-162

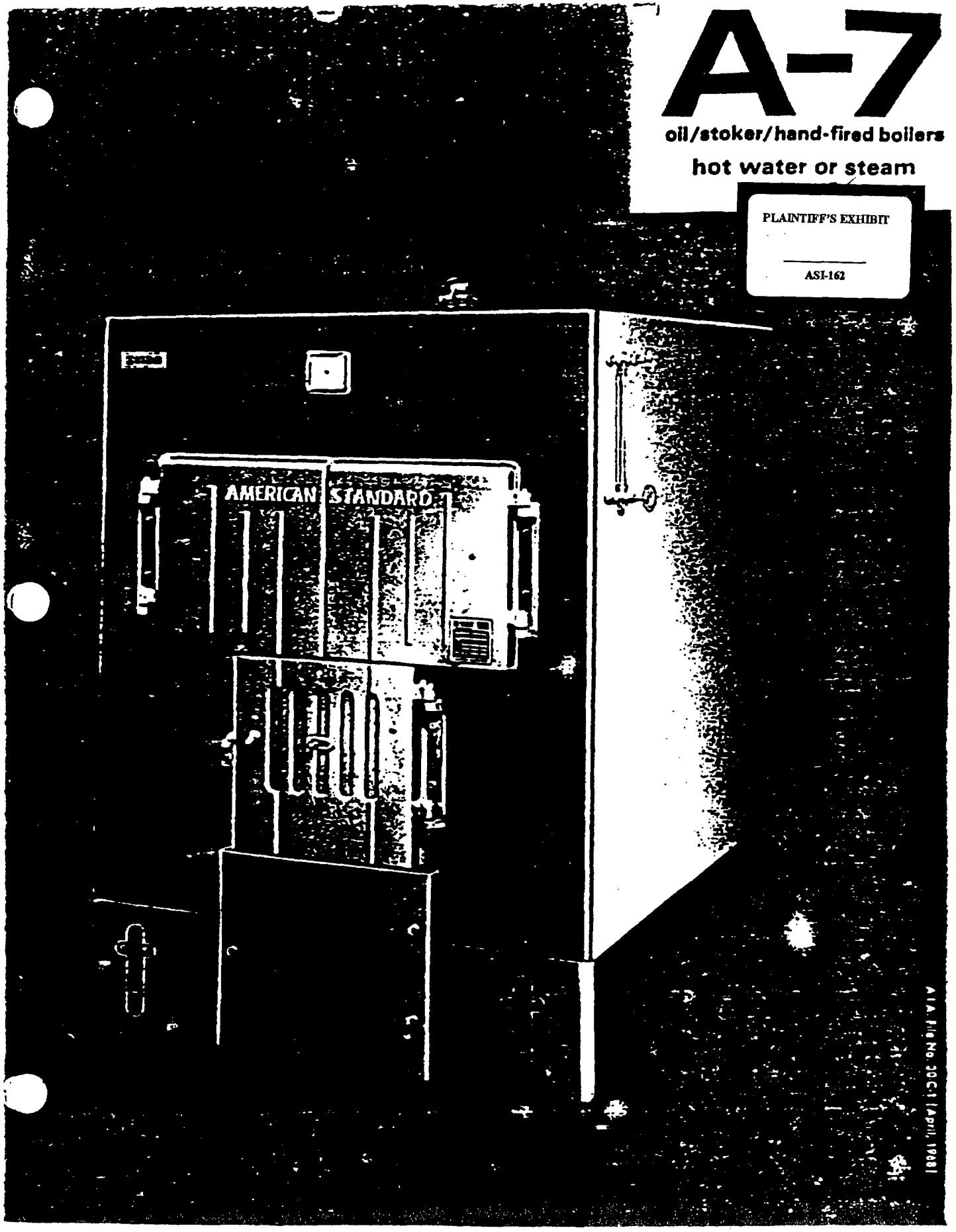

A.I.A. File No. 30C-1 [April, 1968]

the A-7 boiler—expertly engineered for use with all fuels

The A-7 is a compact, high-capacity, cast iron boiler developed by American-Standard for use with all fuels. Boiler-burner units, oil-fired boilers and stoker-fired models are available in ten sizes; hand-fired models in eight sizes. All models are readily converted to gas-firing. The A-7 is ideal for hot water or steam heating in all commercial and industrial buildings. It may be installed singly or in battery to cover a wide range of heating requirements. Such important features as rugged cast iron construction, new section design, high ratings approved by I=B=R, a unique steel sub-base, smooth internal circulation, and American-Standard burners matched to boiler size assure years of efficient, economical and dependable heating performance in the A-7.

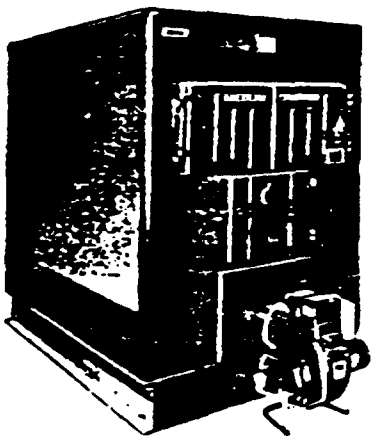

boiler-burner

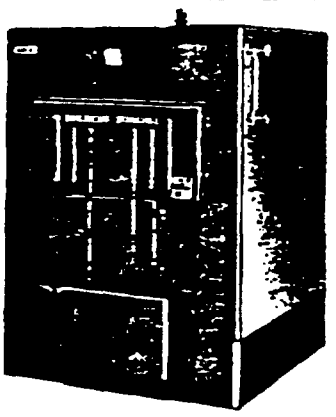

stoker-fired

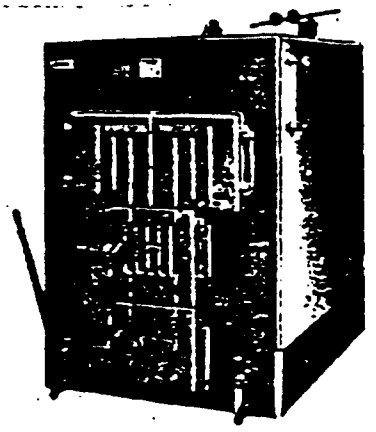

hand-fired

Highly efficient cast iron sections feature upward and outward flow of waterways, plus partially submerged upper nipples to provide unrestricted internal circulation and peak heating performance. Multiple fins extract maximum heat from combustion gases.

Exclusive steel pedestal base provides the additional base height and combustion area needed for oil and stoker firing. There's no need to waste time or money digging a floor pit or building a special base. Base is optional in 8-in. and 10-in. heights.

Boiler-burner model is available with clean firing American-Standard burner, tested and approved especially for use with the A-7. Oil burner is pedestal mounted, and is available in four models with firing ranges from 8 to 23 gph to cover all requirements of the A-7.

High output ratings make the compact A-7 ideal for large installations. Gross I=B=R approved outputs range from 866,000 to 2,532,000 Btuh. The A-7 is available in ten sizes (5-14 sections) for automatic firing, eight sizes (5-12 sections) for hand-firing.

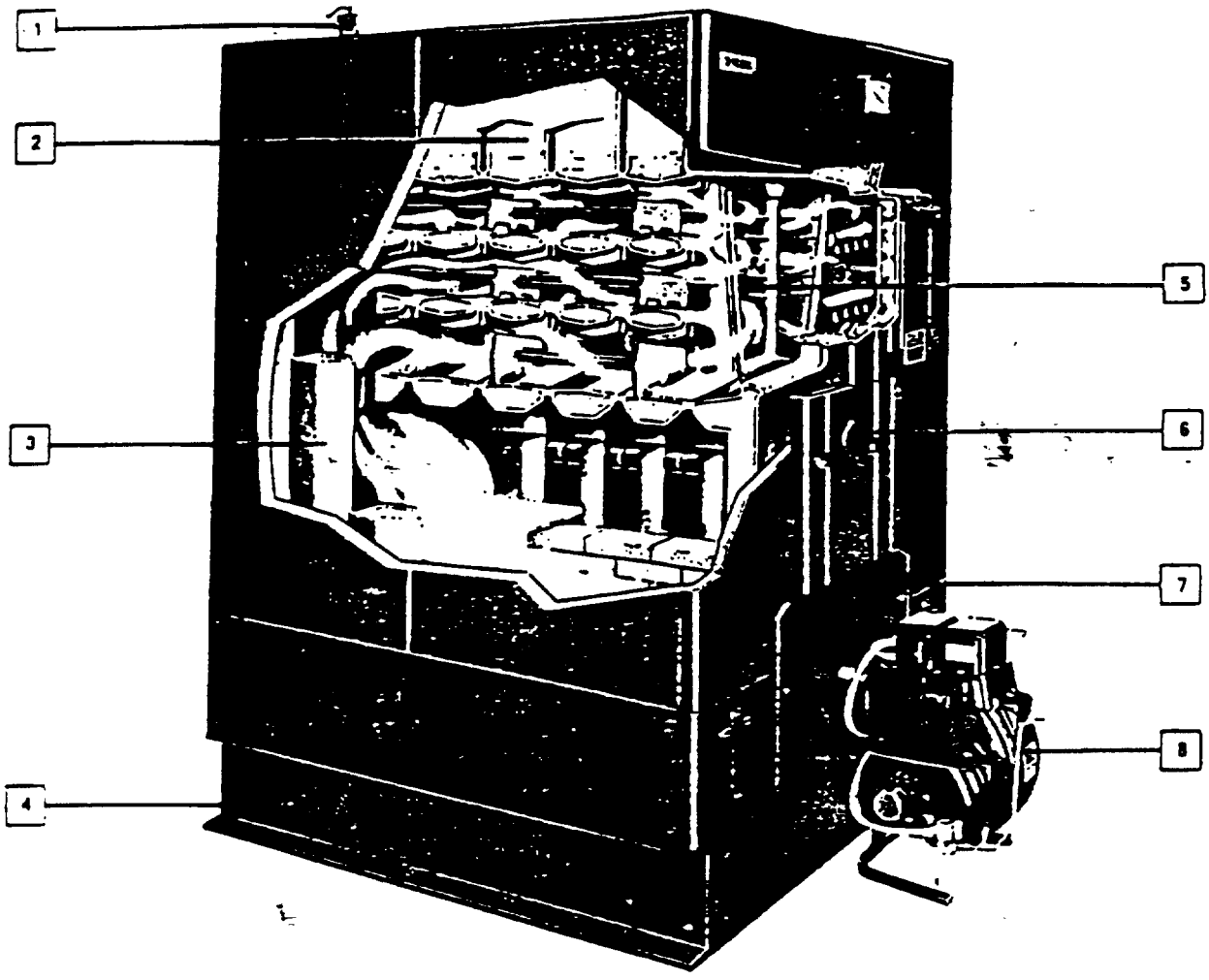

1—safety relief valve—A.S.M.E. rated and furnished as regular equipment on all models of the A-7.

2—extra large nipple port—permits free internal circulation of water between sections. High water level partially submerges top nipple on steam boilers. Tappings provided on rear section are the only ones needed for external water heater connection.

3—sections—constructed of rugged cast iron and factory-tested at 2½ times normal operating pressure to assure positive performance.

4—optional steel pedestal base—provides additional height and combustion area necessary for oil and stoker firing—eliminates the expense and labor of digging a floor pit or constructing special base.

5—scientifically-engineered flue travel—forward through outside flues, rearward through center flues, assures maximum extraction of heat from flue gases.

6—observation port—for oil boilers, permits convenient flame viewing without opening boiler doors; simplifies burner and control adjustments while boiler is firing.

7—base opening plate—constructed of sheet steel; permits rapid installation of oil burner or stoker for automatic firing. Hand-fired models equipped with regular cast iron ashpit door.

8—oil burner—four pedestal mounted models are laboratory-tested for clean, efficient firing in all A-7 boiler-burner units; firing ranges from 8 to 23 gph meet requirements for all A-7 boilers. All burners furnished with 2-stage fuel unit.

AMERICAN STANDARD

A-7 ratings

boiler numbers		gross I=B=R output (btu/hr)	net I=B=R ratings ◆					I=B=R burner capacity ●	chimney		water content (gallons)	
water	steam		water (btu/hr)	steam (sq. ft.)	steam (btu/hr)	piping & pick-up factor			size (in.)	height (ft.)	water boiler	steam boiler
						water	steam					
oil-fired (boiler-burner units and boilers:								(gph)				
A-705-WO(B)▲	A-705-SO(B)▲	866,000	753,000	2707	649,700	1.15	1.333	8.15	16x16	28	151.2	102.2
A-706-WO(B)	A-706-SO(B)	1,012,000	880,000	3163	759,200	1.15	1.333	9.55	16x16	30	167.3	108.4
A-707-WO(B)	A-707-SO(B)	1,196,000	1,040,000	3738	897,200	1.15	1.333	11.25	16x20	36	189.5	124.1
A-708-WO(B)	A-708-SO(B)	1,376,000	1,196,500	4340	1,041,600	1.15	1.321	12.90	16x20	42	211.6	134.7
A-709-WO(B)	A-709-SO(B)	1,570,000	1,365,200	5013	1,203,100	1.15	1.305	14.65	16x20	45	233.7	148.8
A-710-WO(B)	A-710-SO(B)	1,760,000	1,530,400	5672	1,361,200	1.15	1.293	16.30	20x20	50	255.9	163.9
A-711-WO(B)	A-711-SO(B)	1,956,000	1,700,900	6328	1,518,600	1.15	1.288	18.00	20x20	55	277.9	174.1
A-712-WO(B)	A-712-SO(B)	2,148,000	1,867,800	6949	1,667,700	1.15	1.288	19.65	20x20	60	302.5	188.6
A-713-WO(B)	A-713-SO(B)	2,340,000	2,034,800	7570	1,816,800	1.15	1.288	21.45	20x24	70	327.1	203.0
A-714-WO(B)	A-714-SO(B)	2,532,000	2,201,700	8191	1,965,800	1.15	1.288	23.20	20x24	80	351.7	217.5
stoker-fired								(lbs/hr)				
A-705-WC	A-705-SC	866,000	753,000	2707	649,700	1.15	1.333	95	16x16	28	151.2	102.2
A-706-WC	A-706-SC	1,012,000	880,000	3163	759,200	1.15	1.333	111	16x16	30	167.3	108.4
A-707-WC	A-707-SC	1,196,000	1,040,000	3738	897,200	1.15	1.333	131	16x20	36	189.5	124.1
A-708-WC	A-708-SC	1,376,000	1,196,500	4340	1,041,600	1.15	1.321	151	16x20	42	211.6	134.7
A-709-WC	A-709-SC	1,570,000	1,365,200	5013	1,203,100	1.15	1.305	172	16x20	45	233.7	148.8
A-710-WC	A-710-SC	1,760,000	1,530,400	5672	1,361,200	1.15	1.293	194	20x20	50	255.9	163.9
A-711-WC	A-711-SC	1,956,000	1,700,900	6328	1,518,600	1.15	1.288	215	20x20	55	277.9	174.1
A-712-WC	A-712-SC	2,148,000	1,867,800	6949	1,667,700	1.15	1.288	236	20x20	60	302.5	188.6
A-713-WC	A-713-SC	2,340,000	2,034,800	7570	1,816,800	1.15	1.288	257	20x24	70	327.1	203.0
A-714-WC	A-714-SC	2,532,000	2,201,700	8191	1,965,800	1.15	1.288	278	20x24	80	351.7	217.5
hand-fired												
A-705-W	A-705-S	1,122,000	625,400	2606	625,400	1.794	1.794	—	16x16	40	151.2	102.2
A-706-W	A-706-S	1,298,000	744,300	3101	744,300	1.744	1.744	—	16x20	45	167.3	108.4
A-707-W	A-707-S	1,510,000	894,000	3725	894,000	1.689	1.689	—	20x20	50	189.5	124.1
A-708-W	A-708-S	1,708,000	1,042,100	4342	1,042,100	1.639	1.639	—	20x20	55	211.6	134.7
A-709-W	A-709-S	1,910,000	1,202,000	5008	1,202,000	1.589	1.589	—	20x20	60	233.7	148.8
A-710-W	A-710-S	2,108,000	1,363,500	5681	1,363,500	1.546	1.546	—	20x24	65	255.9	163.9
A-711-W	A-711-S	2,288,000	1,518,200	6328	1,518,200	1.507	1.507	—	20x24	70	277.9	174.1
A-712-W	A-712-S	2,456,000	1,667,300	6947	1,667,300	1.473	1.473	—	20x24	75	302.5	188.6

Note: All sizes and models of the A-7 boiler have tappings for external-type domestic water heaters on rear sections.

■ Suffix "S" denotes steam; "W" water; "O" oil-fired; "B" boiler-burner unit; and "C" stoker-fired.

● For complete information on burners and nozzles furnished with A-7 boiler-burner units, refer to chart on page 8.

▲ Crown sheet refractory baffle furnished on 5 section oil-fired boilers only. Flue way baffles furnished with 5 through 8 sections, oil only.

◆ The net I=B=R ratings shown are based on piping and pick-up allowances listed in the column next to the ratings. American-Standard should be consulted before selecting a boiler for installations having unusual piping and pick-up requirements.

American-Standard A-7 boilers have ratings approved by the Institute of Boiler and Radiator Manufacturers, and are constructed of durable cast iron to the specifications of the American Society of Mechanical Engineers.

dimensions and tappings
assemblage of sections

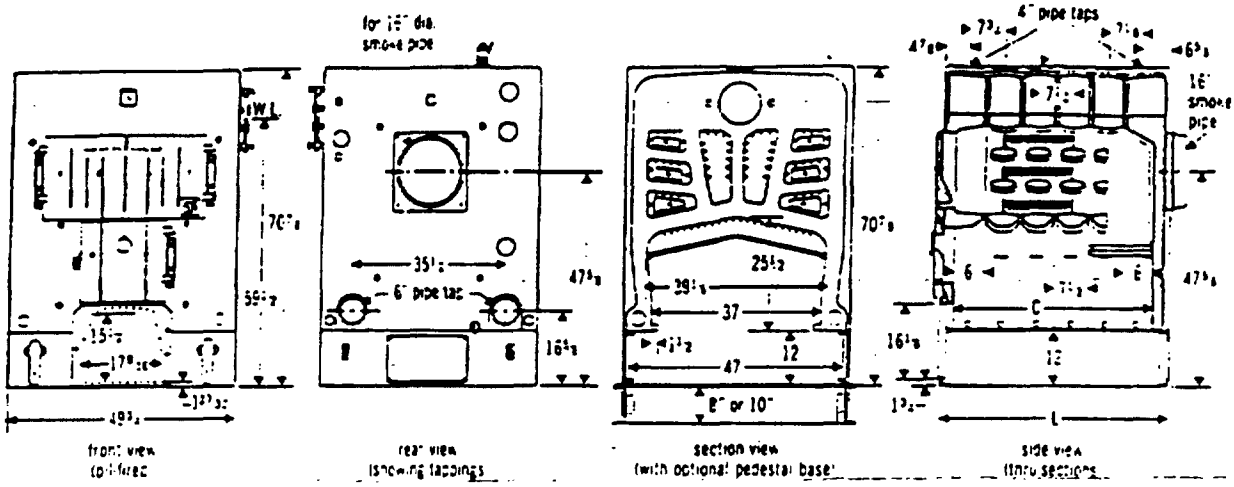

boiler number	number of sections	dimensions (inches) C	dimensions (inches) L	number and size of tappings (inches) flow	number and size of tappings (inches) return	assemblage of sections
A-705	5	34⅝	41½	(2)-4	(2)-6	FX, C, C, C, BX
A-706	6	42⅛	49	(3)-4	(2)-6	FX, C, CX, C, RC, BX
A-707	7	49⅝	56½	(3)-4	(2)-6	FX, C, C, CX, C, RC, BX
A-708	8	57⅛	64	(3)-4	(2)-6	FX, FC, C, CX, C, RC, RC, BX
A-709	9	64⅝	71½	(4)-4	(2)-6	FX, FC, CX, C, C, CX, RC, RC, BX
A-710	10	72⅛	79	(4)-4	(2)-6	FX, FC, CX, C, C, CX, C, RC, RC, BX
A-711	11	79⅝	86½	(4)-4	(2)-6	FX, FC, FC, CX, C, C, CX, RC, RC, RC, BX
A-712	12	87⅛	94	(5)-4	(2)-6	FX, FC, FC, CX, C, C, CX, C, RC, RCX, RC, BX
A-713*	13	94⅝	101½	(5)-4	(2)-6	FX, FC, FC, CX, C, C, CX, C, C, RCX, RC, RC, BX
A-714*	14	102⅛	109	(5)-4	(2)-6	FX, FC, FC, CX, C, C, CX, C, C, CX, RC, RC, RC, BX

*For oil- and stoker-fired only.

legend

FX—front connecting section
C—center section
CX—center connecting section
FC—front center section
RC—rear center section
RCX—rear center connecting section
BX—back connecting section



A	4	—	water heater—external type
B	6	water heater—external type	water heater—external type
C	1	damper regulator—hand firing	—
D	2½	A.S.M.E. safety valve	A.S.M.E. relief valve
E	3	blow-off	water heater—external type
F	3	water heater—external type	water heater—external type
G	3	water heater—external type	water heater—external type
H	¾	steam pressure limit control	water temperature limit control
K	2½	internal low water cut-off	—
L	¾	water temperature control, domestic hot water	water temperature control, domestic hot water
M	1½	nipple port inspection tapping	nipple port inspection tapping

Note: Special tapping, 6 inches below water line, provided on front section for connecting low water cut-off when required.

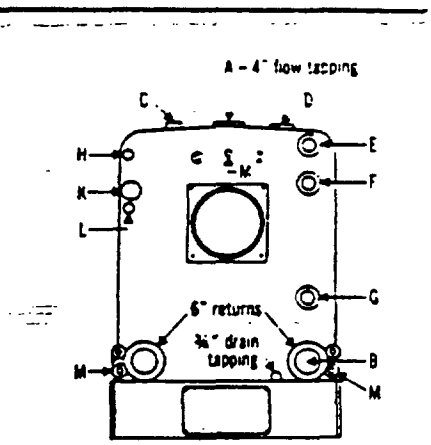

rear view (showing control tappings)

AMERICAN STANDARD

minimum piping recommendations

hot water
(forced circulation only)

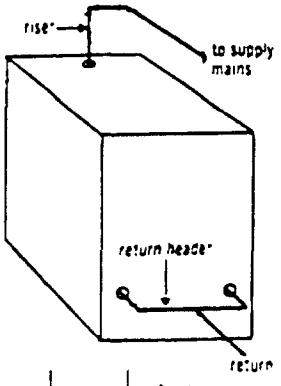

boiler number	riser (in.)	return (in.)	header (in.)	return header (in.)
A-705	3	3	—	3
A-706	4	4	—	4
A-707	4	4	—	4
A-708	4	4	—	4
A-709	4	4	—	4

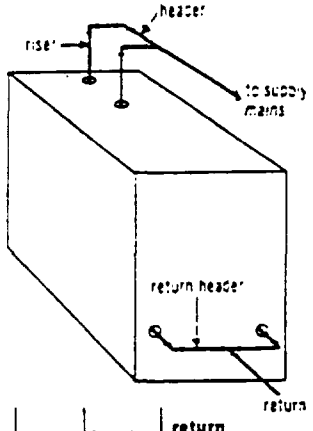

boiler number	risers (in.)	return (in.)	header (in.)	return header (in.)
A-710	(2)-3	5	5	4
A-711	(2)-4	5	5	4
A-712	(2)-4	5	5	4
A-713	(2)-4	5	5	4
A-714	(2)-4	5	5	4

steam

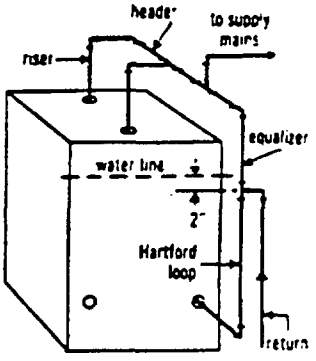

boiler number	risers (in.)	return (in.)	header (in.)	equalizer (in.)
A-705	(2)-4	2	5	2½
A-706	(2)-4	2	5	2½
A-707	(2)-4	2	5	2½

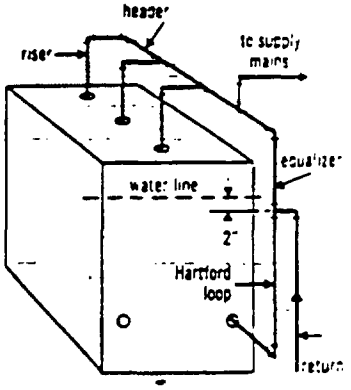

boiler number	risers (in.)	return (in.)	header (in.)	equalizer (in.)
A-708	(3)-4	2	6	3
A-709	(3)-4	2½	6	3
A-710	(3)-4	2½	6	3

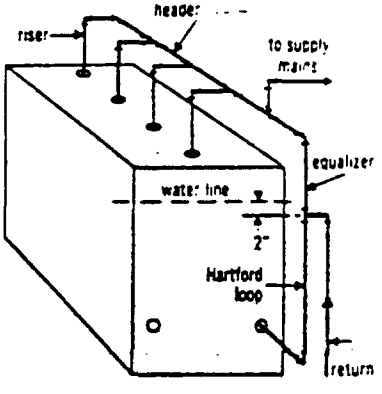

boiler number	risers (in.)	return (in.)	header (in.)	equalizer (in.)
A-711	(4)-4	2½	8	4
A-712	(4)-4	2½	8	4
A-713	(4)-4	2½	8	4
A-714	(4)-4	3	8	4

stoker installation dimensions

The minimum distance between top of the stoker hearth and crown sheet should be governed by dimensions in the chart at the right.

firing rates* (lbs/hr)	minimum distance (inches)
0-20	18
21-30	20
31-40	24
41-100	28
101-200	30
201-300	36

*The firing rates (lbs/hr) for I=B=R burner capacity are based on the use of coal having 13000 Btu per pound heat value.

refractory combustion chamber dimensions

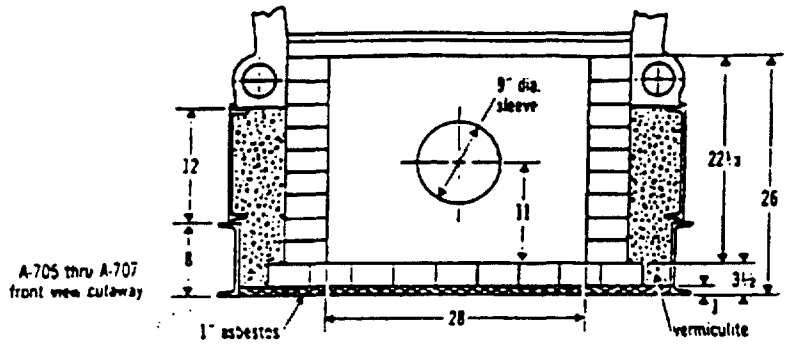

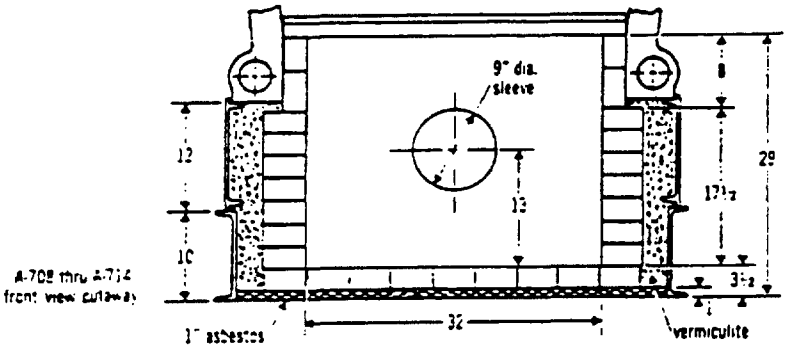

boiler number	inside chamber length (inches)
A-705	27½
A-706	32½
A-707	37½
A-708	38
A-709	41
A-710	44
A-711	47
A-712	50
A-713	53
A-714	56

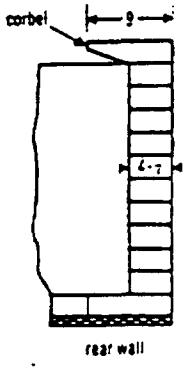

boiler horsepower and shipping weight

water	steam	boiler horsepower	approx. boiler weight (lbs.)
oil-fired boiler-burner units and boilers			
A-705-WO(B)	A-705-SO(B)	25.9	4054
A-706-WO(B)	A-706-SO(B)	30.2	4693
A-707-WO(B)	A-707-SO(B)	35.7	5332
A-708-WO(B)	A-708-SO(B)	41.1	5929
A-709-WO(B)	A-709-SO(B)	46.9	6545
A-710-WO(B)	A-710-SO(B)	52.5	7209
A-711-WO(B)	A-711-SO(B)	58.4	7817
A-712-WO(B)	A-712-SO(B)	64.1	8506
A-713-WO(B)	A-713-SO(B)	69.9	9182
A-714-WO(B)	A-714-SO(B)	75.6	9886
stoker-fired			
A-705-WC	A-705-SC	25.9	4054
A-706-WC	A-706-SC	30.2	4693
A-707-WC	A-707-SC	35.7	5332
A-708-WC	A-708-SC	41.1	5929
A-709-WC	A-709-SC	46.9	6545
A-710-WC	A-710-SC	52.5	7209
A-711-WC	A-711-SC	58.4	7817
A-712-WC	A-712-SC	64.1	8506
A-713-WC	A-713-SC	69.9	9182
A-714-WC	A-714-SC	75.6	9886
hand-fired			
A-705-W	A-705-S	33.5	4466
A-706-W	A-706-S	38.8	5181
A-707-W	A-707-S	45.1	5921
A-708-W	A-708-S	51.0	6601
A-709-W	A-709-S	57.0	7334
A-710-W	A-710-S	62.9	8077
A-711-W	A-711-S	68.3	8767
A-712-W	A-712-S	72.7	9529

furnished equipment

standard equipment for A-7 boilers and boiler-burner units

steam: steam gauge, A.S.M.E. safety valve, gauge glass and trimmings.

water: pressure and temperature gauge, A.S.M.E. relief valve for 50 lbs.

controls furnished for A-7 boiler-burner units

steam: PA404A Pressuretrol, nozzles.

water: L4080 Aquastat limit control, nozzles.

AMERICAN STANDARD

oil burner specifications

boiler number	burner number • (1) with cad cell standard equipment	(2) with electronic equipment	(3) with F.M. electronic equipment	I=B=R burner capacity (gph)	80° solid cone nozzles are furnished with A-7 units: nozzle data — number required	nozzle data — gph each	diameters (inches) — choke	diameters (inches) — disc	diameters of chokes (inches) — outer	diameters of chokes (inches) — inner	motor h.p.
A-705	96-7508-1	96-7508	96-7509	8.15	two	4.00	5	3 1/16	—	—	1/3
A-706	96-7508-1	96-7508	96-7509	9.55	two	(1)-4.50 (1)-5.00	5	3 1/16	—	—	1/3
A-707	96-7508-1	96-7508	96-7509	11.25	two	5.50	5	3 1/16	—	—	1/3
A-708	97-7606-1	97-7606	97-7607	12.90	three	(1)-4.00 (2)-4.50	—	—	6	—	1/2
A-709	97-7606-1	97-7606	97-7607	14.65	three	(1)-4.50 (2)-5.00	—	—	6	—	1/2
A-710	97-7606-1	97-7606	97-7607	16.30	three	(1)-5.00 (2)-5.50	—	—	6	—	1/2
A-711	98-7706-1	98-7706	98-7707	18.00	three	6.00	—	—	7	4 1/2	3/4
A-712	98-7706-1	98-7706	98-7707	19.65	three	6.50	—	—	7	4 1/2	3/4
A-713	—	97A Hi-Lo 7668-E4	97A Hi-Lo 7668-E4	21.45	three	(2)-5.00 (1)-11.00	—	—	6 1/2	—	3/4
A-714	—	97A Hi-Lo 7668-E4	97A Hi-Lo 7668-E4	23.20	three	(2)-5.50 (1)-12.00	—	—	6 1/2	—	1

• (1) 96, 97 and 98 burners are furnished with factory installed cad cell (15-second safety switch timing), bracket and leads for use with R4184B light sensing constant ignition primary control.

• (2) 96, 97 and 98 burners are available at extra cost with optional electronic flame safeguard equipment: RA89CE Protectorelay, Q270A base and C7013A photocell. Provides 15-second trial-for-ignition and 15-second flame-failure-shutdown.

• (3) 96, 97 and 98 burners are available at extra cost with optional electronic flame safeguard equipment for installations requiring Factory Mutual Approval and in states and municipalities with regulations more stringent than Underwriters' Laboratories, Inc.: RA89CE Protectorelay, W415A control panel (includes Q270A base and R48EF switching relay), C7013A photocell. Provides 15-second trial-for-ignition and 2- to 4-second flame-failure-shutdown.

Note: R4150A Flameguard relay on 97A Hi-Lo burner meets Factory Mutual Approval. Provides 10-second trial-for-ignition and 2- to 4-second flame-failure-shutdown.

APPROVAL: American-Standard Models 96, 97, 98, and 97A Hi-Lo oil burners 115 volt/60 cycle (motor for 97A Hi-Lo-P is 230 volt/60 cycle) are listed with Underwriters' Laboratories, Inc. for No. 1 and No. 2 grades of fuel oil, whether obtained by distillation or by the catalytic cracking process. They are approved by the New York City Board of Standards and Appeals, the State Fire Marshal of the Commonwealth of Massachusetts, and the Department of State Police, State of Connecticut.

sample specification for A-7

Contractor shall furnish and install, as indicated on plans .....(oil fired, stoker fired, coal hand fired) boiler(s) having a firing rate of.....and an I=B=R rating of .....Btuh. Boiler(s) shall be constructed of cast iron in accordance with A.S.M.E. requirements for low pressure heating boilers and bear the A.S.M.E. symbol. Each section shall be factory tested at 2½ times maximum working pressure of 50 lbs. for water. Boiler(s) shall have I=B=R ratings. Contractor shall furnish 8" or 10" channel steel pedestal base under regular 12" cast iron base as manufactured and recommended by boiler manufacturer for oil (or stoker) firing. Boiler sections shall be constructed so that the water line for steam boilers shall be above the bottom of top nipple ports to insure proper water circulation between sections. Rear section shall have external water heater tappings as provided by boiler manufacturer. Boiler flue passages shall be horizontal, finned type, baffled as recommended by manufacturer, with flue travel along both side passages from rear to front and back through center passages to rear and smoke collar connection. Oil burner (or stoker) shall include controls as herein described. (Note: include description of controls as required and other burner or stoker features). Combustion chamber will be hand built on the job site in accordance with burner manufacturer's recommendations.

AMERICAN STANDARD

PLUMBING / HEATING

P.O. BOX 2003 NEW BRUNSWICK, N. J. 08903

Form No. 778-2 (4/68)

Litho in U.S.A.