MONS 081606

Effects of PCB on Interspecific Competition in Natural and Gnotobiotic Phytoplankton Communities in Continuous and Batch Cultures[1]

NICHOLAS S. FISHER,[2] EDWARD J. CARPENTER,[3] CHARLES C. REMSEN,[3] AND CHARLES F. WURSTER[4]

[2]*Ph.D. candidate, Marine Biology Program, SUNY at Stony Brook*
[3]*Biology Department, Woods Hole Oceanographic Institution, Woods Hole, Massachusetts 02543*
[4]*Marine Sciences Research Center, State University of New York Stony Brook, New York 11790*

Abstract

The toxicity of polychlorinated biphenyls (PCB) to the diatom *Thalassiosira pseudonana* (formerly *Cyclotella nana*), grown in pure and mixed cultures, was greatest when in competition with other species. Continuous cultures were superior to batch cultures for studying competitive interactions, and PCB caused greater alteration of species composition in continuous cultures than it did in batch cultures. Natural phytoplankton communities from Vineyard Sound, maintained in continuous culture, responded to PCB stress the same as did gnotobiotic communities, with *T. pseudonana* showing similar responses in both communities.

A PCB concentration of 0.1 μg/liter (0.1 part per billion), a level not uncommon in natural waters, did not affect algal growth in pure cultures but caused substantial disruption of continuous culture communities. The possible impact of PCB pollution on natural phytoplankton communities is discussed.

Introduction

In recent years, the sensitivity of marine and freshwater algae to various chlorinated hydrocarbon pollutants has been investigated, most frequently including the ubiquitous DDT [1,1,1-trichloro-2,2-bis(*p*-chlorophenyl)ethane] and PCB (polychlorinated biphenyls). Unicellular algae exhibit a wide range of sensitivity. Ukeles [40], Wurster [43], and Menzel *et al.* [23], for example, demonstrated varying sensitivity to DDT by several species of diatoms and green algae. The toxicity of PCB parallels that of DDT [24], probably due to their similar chemical and physical properties [31].

---

[1]Contribution No. 3181 from the Woods Hole Oceanographic Institution.

MICROBIAL ECOLOGY, Vol. 1, 39-50 (1974)
©1974 by Springer-Verlag New York Inc.

It has been postulated that the differential sensitivity of algae to these pollutants might result in alterations in species composition of phytoplankton communities [43] and interfere with normal successional patterns, particularly in heavily polluted waters. In batch culture experiments, Mosser *et al.* [25] caused an imbalance with PCB or DDT, showing that a sensitive species in a mixed culture can be significantly inhibited by low organochlorine concentrations that had no apparent effect in pure culture. This competitive interaction with the chlorinated hydrocarbons demonstrates the importance of the culture conditions in determining the sensitivity of an organism. Such environmental conditions as salinity [2], light intensity [21], and temperature [13] can also significantly affect sensitivity to chlorinated hydrocarbons, as can the evolutionary history of the organism [12].

Batch culture techniques are generally employed to study the responses of organisms to toxic chemicals, but continuous culture methods may be better for studying the long-term effects of low sublethal concentrations of such materials. Theoretically, at least, continuous cultures maintain constant, steady-state conditions allowing algal growth to continue indefinitely. Batch cultures, by contrast, support growth only until conditions become unfavorable, usually because one or more nutrients have been depleted. Since competition (as defined below) occurs only when a resource is limiting, the batch culture method seems inappropriate for its study because, unlike continuous cultures, initial nutrient concentrations are in excess and competition cannot occur until the onset of stationary phase. Continuous cultures may be more suitable for the study of competition than batch cultures because a resource is always limiting in continuous cultures and their longer growth period permits competitive displacement. In batch culture systems, without a constant inflow of fresh medium and outflow of spent medium, competitive displacement cannot occur. (We are using Tinnin's [39] definition of competition as a "deletion process" by which plants "interfere" with one another.)

We have therefore investigated the use of the continuous culture as a tool for studying competition and for assessing the toxicity of stable pollutants to algae. We examined the effects of PCB on interspecific competition in two-species phytoplankton communities maintained in continuous culture and compared the results to those from batch cultures. To evaluate the applicability of the responses of simple gnotobiotic (species defined) [8] phytoplankton communities to the natural situation, we compared them with natural planktonic communities maintained in continuous culture.

Materials and Methods

Organisms. *Dunaliella tertiolecta* (W.H.O.I. clone "Dun"), an estuarine green alga [11], and *Thalassiosira pseudonana* (W.H.O.I. clone 3H), an estuarine centric diatom [15], were used in all batch culture and gnotobiotic community continuous culture experiments. *Dunaliella tertiolecta* is resistant to high concentrations of chlorinated hydrocarbons, whereas the growth of *T. pseudonana* is inhibited by these compounds [24].

Gnotobiotic Community Continuous Cultures. The apparatus, as shown in Fig. 1, consisted of two reservoirs (20-liter glass carboys) from which medium flowed through silicone tubing via a peristaltic pump (Harvard Apparatus No. 1202) to eight culture vessels. The culture vessels were 1-liter silicone-stoppered Ehrlenmeyer flasks, each containing 750 ml of medium and stirred rigorously by a Teflon-coated magnet. Air was pumped into each culture flask through activated charcoal (to remove organic materials), a sterile cotton plug, and a sterile 0.22 μm Millipore filter; the air inflow permitted an exchange of gases and forced the medium out of the culture flask when its level exceeded that of the outflow tube. The entire apparatus was autoclaved before each experiment and kept sterile throughout. The medium contacted only silicone, Teflon, and glass to minimize adsorbtion of PCB to the apparatus.

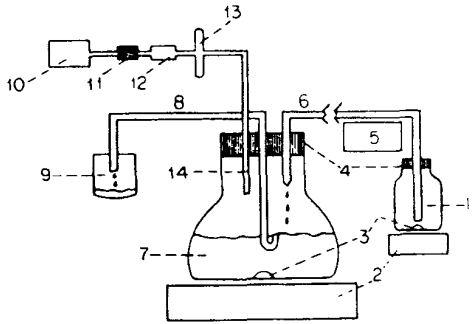

Fig. 1. Schematic representation of a continuous culture, showing (1) reservoir, (2) magnetic stirrers, (3) Teflon-coated magnets, (4) silicone-rubber stoppers, (5) peristaltic pump, (6) medium inflow, (7) culture flask, (8) medium outflow, (9) overflow beaker, (10) air pump, (11) activated charcoal, (12) sterile cotton plug, (13) sterile 0.22 μm Millipore filter, and (14) air inflow.

Natural Community Continuous Cultures. The apparatus was identical to that used for gnotobiotic community continuous culture, except that the culture vessels were 2.8-liter Fernbach flasks, each containing 2 liters of medium.

Batch Culture Apparatus. Batch culture experiments were run in sterilized 220-ml glass bottles with sealed, Teflon-lined screw caps. Each bottle contained 200 ml of medium.

MONS 081607

Culture Conditions. The natural community continuous cultures were maintained at room temperature (24° ± 1.5°C) and received 3250 lumens/m² for 16 hr/day. The other continuous cultures were maintained at 16° ± 0.5°C and received 3250 lumens/m² for 14 hr/day. Batch cultures were run at 12°, 14°, 18°, and 25°C, receiving 3250 lumens/m² for 14 hr/day. Cool-white fluorescent lamps provided the light for all experiments.

Media. The batch culture experiments run at 12°, 18°, and 25°C used f/2 medium [15] made from artificial seawater (salinity = 25 °/00) which was prepared by adding salts to double-distilled water to yield an ionic composition equivalent to that of Instant Ocean (Aquarium Systems, Eastlake, Ohio). The media used for the 14°C batch cultures and the gnotobiotic community continuous cultures were prepared from Woods Hole seawater (salinity = 28 °/00) passed through a precleaned Amberlite XAD-2 resin to remove chlorinated hydrocarbons from the water [16]. Nutrients were added to the seawater to form f/2, except for nitrate, which was added at f/1766 (1 μM). The pH was adjusted to 7.8 and the $NaHCO_3$ concentration was adjusted to 200 mg/liter for all batch culture and gnotobiotic community continuous culture experiments. The medium for the natural community continuous cultures was prepared from Vineyard Sound seawater (June 1972; salinity = 28 °/00) filtered through glass fiber filters and autoclaved (pH = 8.19). Nutrients were added to yield f/20, except for nitrate which was added at f/80 (22 μM).

Experimental Procedure. Batch cultures run at 12°, 18°, and 25°C started with 5000 *D. tertiolecta* and 5000 *T. pseudonana* log-phase cells/ml. Batch cultures at 14°C started with 5000 log-phase cells/ml, mixed cultures receiving 2500/ml of each species. At the start of the experiments, methanolic solutions of PCB (Aroclor 1254) were injected using the technique of Mosser *et al.* [24] to give initial concentrations of 0.1 part per billion (ppb) of PCB in the medium. Control cultures received equal volumes of methanol.

Gnotobiotic community continuous culture reservoirs contained either PCB (0.1 ppb) or an equal volume of methanol (for control cultures). At the beginning of the experiments, each culture flask received 750 ml of sterile medium inoculated with 5000 log-phase cells/ml and either methanol or 0.1 ppb of PCB. The dilution rate was fixed at 21 ± 2% of the volume/24 hr, or 11% of *T. pseudonana's* maximum growth rate and 36% of *D. tertiolecta's* maximum growth rate under the experimental conditions.

The natural community continuous culture reservoirs were treated as above. Culture vessels each received 2 liters of Vineyard Sound seawater passed through a 45-μm mesh net (to remove grazers) and either methanol or 0.1 ppb of PCB. The dilution rate was 47 ± 4% of the volume/24 hr. The experiment was repeated with another summer phytoplankton community taken 2 weeks later from the same location but with a dilution rate of 33 ± 3% of the volume/24 hr.

Sampling and Counting. One-milliliter samples were periodically taken from the batch cultures and fixed with 0.05 ml of Lugol's solution. Continuous culture samples consisted of 2 ml taken at the same time of day from the overflow of each culture flask and fixed with 3% formaldehyde. Little or no wall growth occurred. All samples were counted with a Speirs-Levy counting chamber.

Check for Nitrate Limitation. At the termination of the gnotobiotic community continuous culture experiments, 500 ml were transferred aseptically from each pure culture flask to two batch culture flasks, with or without nitrate addition (at the f/2 level). Subsequent growth was monitored. Culture conditions and sampling procedures were the same as the batch culture experiment run at 14°C.

PCB Analysis. At the end of a gnotobiotic community continuous culture experiment (τ = 381 hr), 1.8 liters were taken from each reservoir and extracted twice with 50 ml of redistilled hexane. The hexane solution was washed with 25 ml of distilled water, dried by passage through a column containing sodium sulfate and glass wool, concentrated, and analyzed by electron-capture gas chromatography [16].

Results

Batch Cultures. In the batch culture experiments, 0.1 ppb of PCB did not appreciably affect growth of either species in pure or mixed culture at any temperature. Figure 2 presents a typical batch culture response to the PCB. The batch culture tests employing f/2 medium compared favorably to the low nitrate batch culture experiment performed at 14°C. The data suggest that the competitive ability of *T. pseudonana* was slightly affected by PCB as the cells entered stationary phase. Minor changes in the species composition therefore occurred at this point.

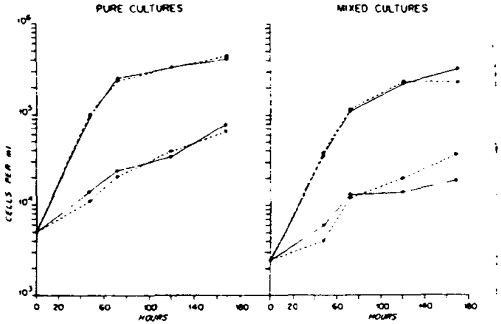

Fig. 2. Growth in 14°C batch cultures of *T. pseudonana* (•——•) and *D. tertiolecta* (○——○) with (- - -) or without (——) 0.1 ppb of PCB. Data points are means from triplicate cultures. The ranges of values of the final mixed culture data points are shown.

Gnotobiotic Community Continuous Cultures. In continuous pure culture, both species maintained steady-state levels and remained unaffected by the PCB (Fig. 3). In control mixed cultures, *T. pseudonana* was a better competitor than *D. tertiolecta* and reached cell densities generally 8 - 10 times that of the green alga (Fig. 4), although *D. tertiolecta* was never completely eliminated from the

MUNS 081608

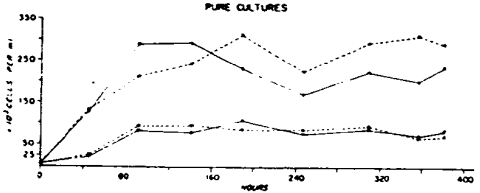

Fig. 3. Growth in continuous pure culture of *T. pseudonana* (●———●) and *D. tertiolecta* (○———○) with (- - -) or without (———) 0.1 ppb of PCB. Data points are means from duplicate cultures. A single classification analysis of variance [37] showed that treated and control culture values did not differ significantly for either species.

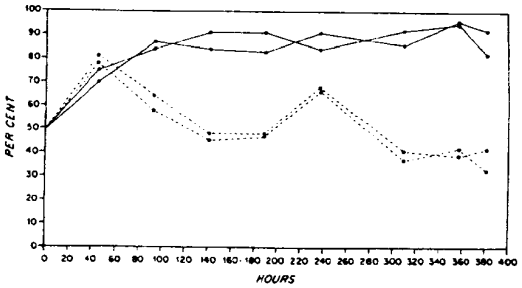

Fig. 4. Continuous cultures of gnotobiotic communities containing *T. pseudonana* and *D. tertiolecta*, showing percent of total cell counts represented by *T. pseudonana* growing with (- - -) or without (——) 0.1 ppb of PCB. Duplicate values are shown.

cultures. The decline in the *D. tertiolecta* population followed an initial rise until both species achieved maximum cell density under the culture conditions. The responses of the species to its addition showed that nitrate was the limiting resource (no growth without addition; exponential growth following addition). Thus the competitive effect was manifested only when nitrate became limiting. In the PCB-treated cultures, the diatom population was reduced to approximately that of the green alga (Fig. 4), which had increased above its control culture level. The competitive effect was again most evident when cell growth was limited by nitrate. As the *T. pseudonana* population declined, the *D. tertiolecta* population increased, indicating the organisms were competing for a limiting resource.

The PCB concentration in the reservoir medium decreased from 0.1 μg/liter at $t = 0$ hr to 0.042 μg/liter at $t = 381$ hr. Thus about 4% of the PCB was lost per day, probably due to adsorbtion onto the reservoir glass. Södergren [36] reported an almost identical loss rate for the DDT under similar conditions and showed that the loss was linear with time.

Natural Community Continuous Cultures. In the natural community continuous cultures, a small centric diatom, which under the light microscope was identified as *T. pseudonana*, maintained a larger population in control cultures than in PCB-treated cultures where it was substantially reduced (Table 1). A small species of *Chaetoceros* (probably *C. simplex* or *C. gracilis*) and *Skeletonema costatum*, the other dominant organisms, remained largely unaffected by the PCB. Other species in the inoculum, listed in Table 2, were either eliminated or grew to very low cell densities. Shannon species diversity indices [27], computed for the natural communities in continuous culture, are shown in Table 3. The control cultures showed a modest decline in diversity from $t = 0$ hr to $t = 146$ hr, whereas the PCB-treated cultures showed a much larger decline.

Table 1
Growth of the Three Dominant Species in Natural Phytoplankton Communities in Continuous Culture[a]

	Hours	*T. pseudonana* (X 10^3 cells/ml)		*Chaetoceros* sp. (X 10^3 cells/ml)		*S. costatum* (X 10^3 cells/ml)	
		0 ppb	0.1 ppb	0 ppb	0.1 ppb	0 ppb	0.1 ppb
A	0	4.0 ± 1	4.0 ± 0	5	4	3	1
	146	23.5 ± 0.5	2.5 ± 1.5	195	335	23	12
B	41	2.0 ± 0.5	2.3 ± 1.3	32	12	4	3
	184	11.5 ± 5.5	3.0 ± 2	469	378	7	7

[a] Initial and final cell densities are means from duplicate treated and control cultures. The dilution rate for experiment A was 33 ± 3% of the volume/24 hr, for experiment B was 47 ± 4% of the volume/24 hr.

MONS 081609

Table 2
Minor Species in the Natural Community Continuous Cultures

Diatoms
Cerataulina bergonii
Chaetoceros didymus
Cylindrotheca closterium
Leptocylindrus danicus
Navicula sp.
Phaeodactylum tricornutum
Rhizosolenia delicatula
Rhizosolenia fragilissima
Rhizosolenia setigera
Thalassionema nitzschioides
Loricate flagellate
Calycomonas gracilis
Dinoflagellate
Prorocentrum sp.

Table 3
Species Diversity of Natural Community Continuous Cultures at the Start and the Finish of an Experiment[a]

	t = 0 hr	t = 146 hr
Control	$H' = 1.2 \pm 0$	$H' = 0.85 \pm .05$
Treated	$H' = 1.0 \pm .2$	$H' = 0.25 \pm .15$

[a] H' was calculated as $H' = -\Sigma P_i \ln P_i$, where P_i = importance probability for each species. The values shown are the means from duplicate cultures and are based only on the three dominant species shown in Table 1.

Discussion

Concentrations of PCB as low as 0.1 ppb in the medium were toxic to *T. pseudonana* when interspecific competition occurred. This is one of the lowest chlorinated hydrocarbon levels reported to be toxic to algae, and it approaches or equals the PCB concentrations found in rivers [28, 41], coastal waters [9, 35], and the open ocean [16].

It was evident from our experiments that the continuous culture system was superior to the batch culture technique for studying interspecific competition. PCB-induced alterations of the species composition in continuous cultures were far greater than they were in the batch cultures, as shown in Figs. 2 and 4.

This probably reflected the extent of competition in each culture system, for the continuous cultures did not appear more sensitive than batch cultures in detecting pollutant effects on pure cultures of algae. The principal value of continuous culture systems in evaluating the effects of sublethal levels of pollutants on population dynamics therefore lies in dealing with competitive interactions. Other reports have also shown the value of continuous cultures as aids for studying competition [14, 19].

Although neither batch nor continuous cultures closely resemble natural environments, which are far more complex and irregular, each typifies, to some extent, a stage in natural phytoplankton succession. Batch cultures, with their rapid increase in biomass caused by high initial nutrient concentrations, and then a stationary phase, can be likened to spring phytoplankton blooms. Continuous cultures with their steady-state nutrient levels and biomass are more typical of summer phytoplankton communities [34]. Our results suggest that in nature phytoplankton undergoing a bloom may not be greatly affected by low levels of pollutants because, as shown in batch cultures, nutrient supplies are initially in excess and competition occurs only as the biomass stops increasing. The great increase in biomass during blooms may further serve to dilute the toxic pollutant dosage per cell. Summer or other steady-state phytoplankton communities, where nutrients are often limiting, may well be affected by persistent pollutants due to competition [17, 18].

Polychlorinated biphenyls had the same effect on the growth of *T. pseudonana* in the natural phytoplankton communities as it did in simple, artificial communities. Thus a species maintained in the laboratory for 15 years [5] and known to be sensitive to PCB [24] was similarly affected by PCB in freshly collected, natural phytoplankton communities with initially a normal balance of algal species, bacteria, yeasts, and fungi. It should be noted that *T. pseudonana* is an abundant species in nature [15] as well as an excellent food source for shellfish [38].

Polychlorinated biphenyls decreased diversity in the natural communities, as have other stable pollutants [3, 4, 10, 29, 30, 42]. By reducing species diversity, toxic pollutants might help initiate or aggravate such undesirable conditions as the eutrophication of natural waters. Alterations in species composition of algal communities could shift the abundance of resident animal populations if the herbivores graze or digest selectively. Grazing selectivity is well known among many marine animals, particularly the zooplankton [1, 6, 20, 22, 32, 33] and oyster and clam larvae [7]. Seemingly unimportant effects, such as the decline of one or a few prominent phytoplankton species, might therefore have important consequences for higher trophic levels.

The toxicity of PCB to algae may be greatly enhanced under certain environmental conditions as discussed above. Other pollutants in concert with

MONS 081610

PCB may further augment its toxicity to algae, as was shown with DDE [26]. These complexities make tenuous the prediction of safe environmental concentrations of stable chlorinated hydrocarbon pollutants.

Acknowledgments

We thank Dr. R.R.L. Guillard for helpful discussions and for supplying the algae; Dr. G.R. Harvey for use of his gas chromatograph; and Drs. R.H. Backus, V.T. Bowen, J.C. Goldman, J.F. Grassle, G.R. Harvey, and J.H. Ryther for criticizing the manuscript. This research was supported by U.S. National Science Foundation Grant No. GB-11902 and by a grant to W.H.O.I. from the Sarah Mellon Scaife Foundation.

References

1. Bainbridge, V. 1958. Some observations on *Eredne nordmanni* Loven. *J. Mar. Biol. Ass. U.K.* 37: 349-370.
2. Batterton, J.C., Boush, G.M., and Matsumura, F. 1972. DDT: Inhibition of sodium chloride tolerance by the blue-green alga *Anacystis nidulans*. *Science* 176: 1141-1143.
3. Borowitzka, M.A. 1972. Intertidal algal species diversity and the effect of pollution. *Aust. J. Mar. Freshwat. Res.* 23: 73-84.
4. Brandt, C.J., and Rhoades, R.W. 1972. Effects of limestone dust accumulation on composition of a forest community. *Environ. Pollut.* 3: 217-225.
5. Carpenter, E.J., and Guillard, R.R.L. 1970. Intraspecific differences in nitrate half-saturation constants for three species of marine phytoplankton. *Ecology* 52: 183-185.
6. Curl, H.J., and McLeod, G.C. 1961. The physiological ecology of a marine diatom, *Skeletonema costatum* (Grev.) Cleve. *J. Mar. Res.* 19: 70-88.
7. Davis, H.C., and Guillard, R.R.L. 1958. Relative value of ten genera of microorganisms as foods for oyster and clam larvae. *U.S. Fish Wildlife Serv. Fish. Bull.* 58: 290-304.
8. Dougherty, E.C. 1959. Introduction to axenic culture of invertebrate metazoa: a goal. *Ann. N.Y. Acad. Sci.* 77: 27-54.
9. Duke, T.W., Lowe, J.I., and Wilson, A.J., Jr. 1970. A polychlorinated biphenyl (Aroclor 1254) in the water, sediment, and biota of Escambia Bay, Florida. *Bull. Environ. Contam. Toxicol.* 5: 171-180.
10. Edwards, P. 1972. Benthic algae in polluted estuaries. *Mar. Pollut. Bull.* 3: 55-60.
11. Eppley, R.W., Rogers, J.N., and McCarthy, J.J. 1969. Half-saturation constants for uptake of nitrate and ammonium by marine phytoplankton. *Limnol. Oceanogr.* 14: 912-920.
12. Fisher, N.S., Graham, J.B., Carpenter, E.J., and Wurster, C.F. 1973. Geographic differences in phytoplankton sensitivity to PCBs. *Nature (London)* 241: 548-549.
13. Fisher, N.S., and Wurster, C.F. 1973. Individual and combined effects of temperature and polychlorinated biphenyls on the growth of three species of phytoplankton. *Environ. Pollut.* 5: 205-212.

14. Goldman, J.C. 1972. The kinetics of inorganic carbon-limited growth of green algae in continuous culture. Its relationship to eutrophication. Ph. D. Thesis. University of California, Berkeley.
15. Guillard, R.R.L., and Ryther, J.H. 1962. Studies of marine planktonic diatoms. I. *Cyclotella nana* Hustedt, and *Detonula confervacea* (Cleve) Gran. *Can. J. Microbiol.* 8: 229-239.
16. Harvey, G.R., Steinhauer, W.G., and Teal, J.M. 1973. Polychlorobiphenyls in North Atlantic ocean water. *Science* 180: 643-644.
17. Hulburt, E.M. 1970. Competition for nutrients by marine phytoplankton in oceanic, coastal, and estuarine regions. *Ecology* 51: 475-484.
18. Hutchinson, G.E. 1967. A Treatise on Limnology. Vol. 2. Wiley, New York.
19. Jannasch, H.W. 1968. Competitive elimination of *Enterobacteriaceae* from seawater. *Appl. Microbiol.* 16: 1616-1618.
20. Lee, J.J., McEnery, M., Pierce, S., Freudenthal, H.D., and Muller, W.A. 1966. Tracer experiments in feeding littoral foraminifera. *J. Protozool.* 13: 659-670.
21. MacFarlane, R.B., Glooschenko, W.A., and Harriss, R.C. 1972. The interaction of light intensity and DDT concentration upon the marine diatom *Nitzschia delicatissima* Cleve. *Hydrobiol.* 39: 373-382.
22. Marshall, S.M., and Orr, A.P. 1952. On the biology of *Calanus finmarchicus*. VII. Factors affecting egg production. *J. Mar. Biol. Ass. U.K.* 30: 527-547.
23. Menzel, D.W., Anderson, J., and Randtke, A. 1970. Marine phytoplankton vary in their response to chlorinated hydrocarbons. *Science* 167: 1724-1726.
24. Mosser, J.L., Fisher, N.S., Teng, T.-C., and Wurster, C.F. 1972. Polychlorinated biphenyls: Toxicity to certain phytoplankters. *Science* 175: 191-192.
25. Mosser, J.L., Fisher, N.S., and Wurster, C.F. 1972. Polychlorinated biphenyls and DDT alter species composition in mixed cultures of algae. *Science* 176: 533-535.
26. Mosser, J.L., Teng, T.-C., Walther, W.G., and Wurster, C.F. Organochlorine toxicity interactions in a marine diatom. (*unpublished*).
27. Odum, E.P. 1971. Fundamentals of Ecology. W.B. Saunders Co., Philadelphia.
28. Oloffs, P.C., Albright, L.J., and Szeto, S.Y. 1972. Fate and behavior of five chlorinated hydrocarbons in three natural waters. *Can. J. Microbiol.* 18: 1393-1398.
29. Palmer, C.M. 1963. The effect of pollution of river algae. *Ann. N.Y. Acad. Sci.* 108: 389-395.
30. Patrick, R. 1963. The structure of diatom communities under varying ecological conditions. *Ann. N.Y. Acad. Sci.* 108: 359-365.
31. Peakall, D.B., and Lincer, J.L. 1970. Polychlorinated biphenyls—another long-life widespread chemical in the environment. *BioScience* 20: 958-964.
32. Provasoli, L., Shiraishi, K., and Lance, J.R. 1959. Nutritional idiosynchrasies of *Artemia* and *Tigriopus* in monoxenic culture. *Ann. N.Y. Acad. Sci.* 77: 250-261.
33. Rukman, S., and Rogers, J.N. 1969. The feeding of *Calanus helgolandicus* on synchronously growing populations of the marine diatom *Ditylum brightwellii*. *Limnol. Oceanogr.* 14: 701-709.

MONS 081611

34. Riley, G.A. 1966. Comments. *In*: Marine Biology. C. H. Oppenheimer, editor, Vol. 2. N.Y., Academy of Science, New York. pp. 321-335.

35. Schmidt, T.T., Risebrough, R.W., and Gress, F. 1971. Input of polychlorinated biphenyls into California coastal waters from urban sewage outfalls. *Bull. Environ. Contam. Toxicol.* 6: 235-243.

36. Södergren, A. 1968. Uptake and accumulation of C^{14}-DDT by *Chlorella* sp. (Chlorophyceae). *Oikos* 19: 126-137.

37. Sokal, R.R., and Rohlf, F.J. 1969. Biometry. Freeman, San Francisco.

38. Tenore, K.R., and Dunstan, W.M. 1973. Comparison of rates of feeding and biodeposition of the American oyster, *Crassostrea virginica*, fed different species of phytoplankton. *J. Exp. Mar. Biol. Ecol.* 12: 19-26.

39. Tinnin, R.O. 1972. Interference or competition? *Amer. Natur.* 106: 672-675.

40. Ukeles, R. 1962. Growth of pure cultures of marine phytoplankton in the presence of toxicants. *Appl. Microbiol.* 10: 532-537.

41. Veith, G.D., and Lee, G.F. 1971. Chlorobiphenyls (PCBs) in the Milwaukee River. *Water Res.* 5: 1107-1115.

42. Woodwell, G.M. 1970. Effects of pollution on the structure and physiology of ecosystems. *Science* 168: 429-433.

43. Wurster, C.F. 1968. DDT reduces photosynthesis by marine phytoplankton. *Science* 159: 1474-1475.

MONS 081612