AMERICAN STANDARD

OIL BURNER INSTALLATION INSTRUCTIONS AND BURNER SPECIFICATIONS FOR FRA-5 AND FRA-7 BOILERS

PLAINTIFF'S EXHIBIT
ASI-545
tabbies

FORM NO. BP-31130-01

GENERAL INFORMATION

This manual is to be used in conjunction with the appropriate FRA-5, and FRA-7 boiler manuals. The boiler should be assembled, tested, and the boiler controls installed before the burner is unpacked and serviced for installation. All electrical and oil lines should be run adjacent to the boiler-burner installation. It is important that the serviceman and installer have the following instruments available for proper testing, adjustments, and servicing the burner:

CO_2 Test Instrument
Smoke Tester
Draft Gauge (Inclined tube .0 to 1.0 inch)
Oil Pressure Gauge
Oil Vacuum Gauge
Combination Voltmeter and Ammemeter
Flame Mirror

The "90" series burners covered by this book have been specifically designed and tested for the boiler-burner units involved. At the rear of this manual are specific charts showing "Air Handling Data", "Burner Data", and various parts data. For proper burner operation the dimensions shown should be strictly adhered to.

AIR FOR COMBUSTION

It is necessary to have sufficient outside air for combustion to be supplied at all times to the Boiler Room. A permanent opening or duct should be provided such that the boiler input will not exceed 5000 Btuh/square inch of free area. The air inlet opening should be located at a point where it cannot be covered with snow or where it cannot be obstructed by any other means. Movable louvers should not be used. Never depend on an open door that can be closed for the air inlet, or rely on cracks under doors or around loose windows.

PREPARATION OF BURNER FOR INSTALLATION ON BOILER

1. Where involved, attach pedestal mount to burner (Pedestal packed in burner box)
2. Insert proper nozzle(s). (See "Nozzle Data" in charts of this manual.)
3. Check nozzle settings as shown in this manual.
4. Check electrode settings as shown in this manual.
5. Be sure all parts and settings agree with those shown in this manual.
6. Burner is now ready for installation on boiler mounting plate.

ELECTRICAL POWER CONNECTION

Check burner, this manual, and wiring diagrams for the proper power supply to be connected to burner and oontrols. Note that all burners are factory wired, eliminating field wiring as much as possible.

START-UP AND FINAL ADJUSTMENTS

1. CAUTION Make sure there is water in the boiler and that there is oil in the oil line to prevent burn-out of Fuel Unit.
2. Connect oil lines to burner.
3. Connect electrical power wiring to burner and boiler controls.
4. Set air adjustments on burner to half open position. (These adjustments are temporary and will probably have to be changed to achieve proper smoke and CO_2 readings.
5. Turn on power to burner.
6. Set limit and operating controls to desired settings. Burner should start.
7. Check smoke characteristics immediately. Adjust air to get No. 2 smoke or less.
8. Check oil pressure. Should be 100 p.s.i. (Except 95A-300 burner which requires 200 p.s.i.)
9. Check CO_2 reading (should be 11.0 to 12.5 percent).
10. Check Out Operation of:

Limit Control	Ignition Characteristics
Operating Control	Burner Safety Circuit
Low Water Cut-Off	Recheck CO_2 and Smoke Readings

SERVICE TIPS

The following information has been compiled to assist the installer and serviceman in locating and correcting service problems with our "90" series burners. These burners are equipped with 3450 r.p.m. motors and pumps and are supplied in three categories as listed below.

#1 Models 92A, 95A, 95A-300, and 96A with one stage firing and with flame retention.

#2 Models 96A-T and 97A-T with two stage firing and with flame retention. These models provide a low fire start and high fire operation without a change in combustion air between the first and second stages.

#3 Models 96A Hi-Lo, 97A Hi-Lo, and 98A Hi-Lo with two-stage firing and flame retention. These models provide a low fire start and high fire operation with an increase of combustion air for the second stage. In addition, these can be operated on either high or low fire by the use of a high fire controller. The high fire controller is used in some installations where some heat is needed in the boiler at all times. The burner is started with the main switch and the low fire comes on. A limit control (high fire controller) in the second stage or high fire circuit will then operate the high fire as required. If more heat is required, then the low fire will supply, the high fire will come on until the limit control is satisfied. The high fire will then shut down and the burner will operate on low fire until the high fire limit control again calls for heat.

AIR FOR COMBUSTION

If lack of combustion air is suspected, close the door to the boiler or furnace room and operate the burner for at least 30 minutes. If the flame appears to become gassy and tends to snuff out, insufficient combustion air is the cause and corrective measures must be taken to provide the proper amount of air.

AIR SHUTTER ADJUSTMENT FOR HI-LO BURNERS

The first stage is set first. De-energize the second stage (high fire) by moving the toggle switch to the "off" position before making the first stage air adjustments. This switch is located either on the control panel or on the junction box.

The first stage (low fire) air on 97A Hi-Lo and 98A Hi-Lo burners is adjusted with the lower shutter by means of the adjustment lever on the air inlet housing. The first stage air on Model 96A Hi-Lo burners is adjusted with a screw in the upper shutter.

The second stage (high fire) air for all of these models is adjusted by moving the hydraulic cylinder up or down as required to obtain a flame that is stable and spinning approximately 1/2" ahead of the spinner (check this by use of a flame mirror) and with a CO_2 reading of 11.0% to 12.5%.

Too much air on the first stage will occasionally cause hard (rough) lighting. Adjust the first stage (low fire) shutter until the lighting becomes smooth. Check the smoke at this time and if the smoke spot is darker than #2 on the Bacharach scale, loosen the set screw that locks the drawer assembly in position and move the assembly forward slightly until the fire is spinning about 1/2" ahead of the spinner. In some units it is impossible to observe this, and it is necessary to rely on the CO_2 instrument and the smoke tester. The CO_2 on the first stage fire should be 10.5 to 12.0 percent and the smoke should be no darker than #2 on the Bacharach scale.

After setting the first stage to a satisfactory fire, energize the second stage by moving the toggle switch to the "on" position. Adjust the hydraulic cylinder up or down for the second stage combustion air to a smoke test sample between zero and #1. At this setting the CO_2 reading should be between 11.0 and 12.5 percent.

After satisfactory combustion and lighting are achieved, make sure that the screws securing the cylinder for the second stage and the lock nuts on the first stage adjustment are tight.

BLOWER WHEELS (FANS) - VIBRATION

If undue vibration is detected in the burner, it could be caused by the blower wheel being out of balance. Check to determine if any foreign matter has been drawn into the burner and lodged in the blower wheel. If not, replace the blower wheel. Remove the motor from the burner and run it without the blower wheel to determine if there is any undue vibration. Replace the motor if the operation is not smooth. When installing a new blower wheel in the burner, it is very important that it be secured tightly to the motor shaft.

The 1/4 H.P. motor on Model 92A has one flat on the shaft. The 1/3 H. P. motors on Models 95A-300, and 96A have two flats. The 1/2 H. P. motors on Models 97-0, 96A-T, 96A Hi-Lo, the 1 H.P. motors on Models 97A-T and 97A Hi-Lo, and the 2-3/4 H. P. motors on Model 98A Hi-Lo have one flat and a keyway.

The replacement blower wheel must be located on the motor shaft so that the set screws bear on the center of the flat on the 1/4 and 1/3 H. P. motors. On the 1/2, 1, and 2-3/4 H. P. motors the key will locate the blower wheel on the shaft. Make sure that the set screws on blower wheels are securely tightened. There should be adequate clearance on both sides of the blower wheel in the housing.

The blower wheels used in the 90 series burners are dynamically balanced for operation at 3450 r.p.m. and any replacement should be an exact duplicate of the original.

DRAFT

The 90 series burner are designed for firing against pressure in the firebox, but operate just as satisfactorily in a natural draft installation. If the draft loss in the heating unit is so high that it is impossible to obtain .02" of draft over the fire with a CO_2 reading of 10.0 to 11.0 percent, check the unit manufacturers data for correct chimney height,

firing rate and draft loss. High draft loss (if not built into the unit) may indicate soot in the flue ways, low CO_2, or air leaks in the unit.

It is important that the vent or chimney be located so as to be free of downdrafts. Forced draft burners can operate with back pressure in the boiler and flue pipe, but strong surges of down draft can cause the fire to become smoky and erratic. After a shut-down the heat in the combustion area could damage the burner if it is forced back through the burner by down-drafts. It may be necessary to increase the height of the vent or chimney above the building and in some instances install a dutch cap or similar appliance to prevent down-drafts.

FUEL SYSTEM

All Hi-Lo burners must be installed with two oil lines to the oil tank. The A-T burners, which are low fire start burners and all of the one stage firing burners can be installed with a single line if no lift from the oil tank is involved. If a long single line is used, it should be large enough in diameter so that the vacuum reading on the fuel unit is no more than 10 inches. If the oil tank is below the level of the burner, use a two-line system.

If two or more burners are piped to a common suction line, each burner must have its own check valve.

On Model 95A-300 burners the pressure is usually set at 200 p.s.i. but this can vary from 150# to 250# p.s.i.

If the pressure gauge on the fuel unit shows the 100 p.s.i. cannot be obtained, the fuel unit should be replaced. The quick cut off pumps used on Model 92A should never be adjusted above 100 p.s.i.

A pressure gauge and a vacuum gauge should be used if a fuel unit problem is suspected. If the pressure is excessive, such as 125# to 150# (except on 95A-300) check the flame base at the "A" head spinner. The base of flame should spin approximately 1/2" off the spinner. Excessive pressure may cause the flame to lift away from the spinner. The pressure should be maintained between 100# and 125# except on the 95A-300.

Refer to the fuel unit manufacturers data for the proper vacuum for the installation. If the vacuum reads higher than the calculated vacuum (see manufacturers instructions) check for restrictions in the oil line, excessively long lines, closed tank valve, kinked copper tubing, plugged oil filter, frozen oil line, undersized oil line, excessive oil lift or a restricting check or foot valve. If the vacuum reads low, look for air leaks in the suction line, valve fittings or fuel unit. On a gravity flow installation, no vacuum will be shown on the gauge except where there are restrictions caused by a closed valve, plugged oil filter, kinked, undersized, or excessively long suction line.

All restrictions must be eliminated and undersized or excessively long lines replaced with lines of a greater diameter so that the vacuum reading will be no more than 10 inches.

A singing sound in the fuel unit may indicate air in the suction line. Excessively high vacuum can also cause noise in the fuel unit. Air in the suction line can cause delayed lighting. This condition will in time coat the photocell with carbon and safety shut-downs may result.

If it is suspected that the oil is returning to the tank after shut-down, inspect for leaks in the suction line and check valve. If the check valve is not seating properly and there is a slight air leak in the suction line, the oil will flow back to the oil tank. On the next start up of the burner, there will be a delay in the oil delivery while the pump is lifting the oil from the tank. Repair any air leaks and replace the check valve if necessary.

IGNITION PROBLEMS

Hard (rough) lighting can be caused by ignition problems. Check the transformer for adequate spark. Check for a spark by momentarily short circuiting the transformer across the terminals by use of a screwdriver with an insulated handle. A 3/4" long spark should be obtained. If there is no spark or if the spark was weak (less than 1/2") replace the transformer. Check the spark gap with the dimensions in the installation manual. Start the burner and check the spark at the same time by using a flame mirror.

With standard control systems (where pre-purge is not used) the spark should appear immediately when the burner starts. If a delay is detected, check the power supply to the burner. When a condition of this type is suspected, the best check is to have a voltage recorder connected to the burner for a period of 48 hours. This will indicate any voltage drop during that period. Voltage drops are usually caused by undersized wiring or a long run from the burner to the source of power. If delayed ignition is not corrected, it could cause an explosion.

Check the drawer assembly for possible high voltage leaks in the insulators. If in doubt, change the electrode assemblies. Check the electrode springs and points for adequate clearance to the ground. Check for carbon on the electrode points. Check all dimensions on the drawer assembly according to the dimensions shown in the manual and reset if necessary.

Some burners will be supplied with a set of wide arc electrodes. The gap between the bends in the electrode tips should be 1/16 to 3/32. The flared out portion of the tips should be set at 1/8 to 3/16.

If the spinner is not correctly positioned in relation to the stabilizer ring, hard lighting could occur. This is usually caused when the spinner is positioned too far back inside the stabilizer ring. To correct this condition, loosen the set screw that locks the drawer assembly in place and move the assembly forward in steps of 1/16 of an inch until the lighting is smooth and the flame is spinning approximately 1/2" ahead of the spinner.

Be sure to tighten the set screw after making this adjustment and check the electrode springs from the electrodes to the transformer, making sure there is adequate clearance to a ground and there is no possibility of a short circuit.

If a Hi-Lo burner is in question, make sure that the oil lines from the valve cluster to the drawer assembly are in the proper positions. The first stage is always connected to the lower oil pipe. The oil line from the normally closed port on the three way valve is connected to the upper oil pipe (second stage).

If the fire tends to blow out and hard lighting persists, check the setting of the air shutters. See air shutter adjustment for Hi-Lo burners for details -- section #2 of this manual.

If the fire is clean with no smoke while in operation, but the heating unit continues to become coated with soot, check for short cycles on the burner. A delay valve will act as an instantaneous valve while hot. Short cycling will eventually cause hard lighting due to carbon on the spinner and nozzles. Under these conditions the limit control on the heating unit should be set with a greater differential to allow the delay valve to cool enough for proper operation.

INSTRUMENTS

Instruments must be used to properly adjust the flame.

Do not attempt to obtain a higher percentage of CO_2 than a clean fire will give. Keeping the heating surface of the unit clean is more important than securing a higher percentage of CO_2 . Set the flame at no more than #2 on the Bacharach scale.

NOZZLES

Use only the nozzles recommended for they are of the proper type, capacity and spray angle, and these nozzles should give the best performance in each burner and unit combination under normal conditions.

However, because of the great variation in fuel oils in different localities, normal conditions do not always apply. Nozzles will not always deliver the gallons per hour or the spray angle with which they are marked, and in some instances nozzles other than those furnished as original equipment could give better performance.

The nozzles used should give smooth lighting and be able to produce a CO_2 reading of 11.0 to 12.5 percent with no more than a #2 smoke.

It is recommended on Hi-Lo burners that 2/3 of the total input of the boiler or furnace be installed on the first stage. On A-T burners use 75% of the total input on the first stage.

Do not attempt to install the nozzles through the choke (end cone). It is impossible to get a tight joint between the nozzles and the adapters unless two wrenches are used. Remove the drawer assembly from the burner and then remove the spinner before installing the nozzles.

VALVE CLUSTER AND HYDRAULIC CYLINDER ON HI-LO BURNERS

If the piston in the oil cylinder will not retract, loosen the 3/16 flare nut at the bottom of the cylinder. This will relieve the oil pressure in the cylinder. If the piston does not retract, replace the cylinder. If the piston does retract, replace the 3-way valve.

If the first stage fails to operate, check the first stage valve. This is the valve adjacent to the burner housing. This can be checked by removing the cover from the junction box to which the valves are attached and checking the electric circuit to the valve. If checking with the voltmeter or a test lamp shows that current is goint to the valve coil, and the valve does not open after 10 seconds, replace the valve.

If the second stage fails to operate, make sure that the toggle switch (high fire) is in the "on" position and that the circuit is completed through the switch. Determine if the three-way valve is in the proper position with the N. C. (normally closed) port connected to the second stage oil pipe. With the burner operating on the first stage, check the electric circuits in the junction box, to the two-way valve and the three valve on the second stage. If checking with the voltmeter or a test lamp shows that current is going to the valve coils loosen the flare nut on the discharge side of the two-way valve. If no oil is discharged after 10 seconds, the valve must be replaced. If oil is discharged, tighten the flare nut and loosen the flare nut at the N. C. (normally closed) port of the three-way valve. If no oil is discharged, replace the three-way valve. If oil is discharged, check for a plugged nozzle.

On standard control systems where pre-purge is not required, the two-way valves are of the delay type. If controls providing pre-purge are used, an instantaneous valve is used on the first stage.

If safety shut downs are common with an installation of Hi-Lo or A-T burners check the timing of the delay on the first stage valve. On burners with one stage firing check the timing of the delay on the valve. If the delay amounts to more than 10 to 12 seconds under normal temperature conditions of 60 to 80 degrees F, replace the valve. Low ambient temperature at the burner can cause unusually long delays in the opening of the valve. High ambient temperature at the burner will shorten the delay in the opening of the valve and may cause hard starting.

If the low ambient and high ambient temperature conditions cannot be corrected by the proper ventilation of the boiler or furnace room, the burner should be replaced with one having a programming control that is not affected by temperature.

ATTACHMENTS

Webster literature on fuel units showing the pump model numbers and oil line and vacuum data.
Sundstrand pump data.

AIR HANDLING DATA

Boiler No.	Standard Burner No. & Spec. No.	Burner Rating	IBR Boiler Rating GPH	Choke Data I.D.	Choke Data Part No.	12 Blade Spinner O.D.	12 Blade Spinner Part No.	Stabilizer Ring Part No.	Disc Data O.D.	Disc Data Part No.	Qty. Used	Size G.P.H.	Spray Angle	Typ
FRA-504	92A-7240-D	8	3.55	3-9/16	10523*	3-1/2	11037	---	---	---	2	1.75	80	H
FRA-505	92A-7242-D	8	4.30	3-9/16	10523*	3-1/2	11037	---	---	---	1	2.00	80	H
											1	2.25	80	H
FRA-506	95A300-7468-D	4	5.10	3-9/16	10523*	3-1/2	11037	---	---	---	1	4.00	70	S
FRA-507	95A300-7468-D	4	5.90	3-9/16	10523	3-1/2	11037	---	---	---	1	4.50	70	S
FRA-508	96AM-7498-D	2	6.70	4	11793	3-1/2	11037	---	3	12016	1	3.25	70	S
											1	3.50	70	S
FRA-509	96AM-7546-B	4	7.45	4-1/2	10447	3-1/2	11037	10454	3	12016	1	3.50	70	S
											1	4.00	70	S
FRA-510	96AM-7548-B	5	8.25	5	10465	3-1/2	11037	10454	3	12016	2	4.00	70	S
FRA-511	96AM-7548-B	5	9.05	5	10465	3-1/2	11037	10454	3	12016	2	4.50	70	S
FRA-706	96AM-7543-B	1	10.55	5	9065	3-1/2	11037	9477 turb.	3	12016	1	5.00	80	S
											1	5.50	80	S
FRA-707	96AM-7543-B	1	12.30	5	9065	3-1/2	11037	9477 turb.	3	12016	2	6.00	80	S
FRA-708	96AT-7935-K	3	14.15	5-1/4	10471	3-1/2	11037	10454	3	12016	2	6.00	90	S
											1	2.00	90	S
FRA-709	96AT-7937-K	---	16.35	---	10829**	3-1/2	11037	10828	---	---	2	6.50	90	S
											1	3.00	90	S
FRA-710	970-8111-B	2	18.15	6-1/2	10475	4-1/4 3-3/16	12107 11463	11957	---	---	2	9.00	70	S
FRA-711	970-8111-B	2	20.20	6-1/2	10475	4-1/4 3-3/16	12107 11463	11957	---	---	2	10.00	70	S
FRA-712	97A-HiLo-7673-E	6	21.95	6-1/2	10475	3-1/2	11037	10449	3	12016	2	6.00	80	S
											1	10.00	80	S
FRA-713	97A-HiLo-7673-E	6	24.10	6-1/2	10475	3-1/2	11037	10449	3	12016	2	6.00	80	S
											1	12.00	80	S
FRA-714	98A-HiLo-7773-E	1	26.30	7-1/2	10617	4-1/4	10628	10622	4	11131	2	9.00	80	S

*Recessed 7/8" from end of Air Tube. **10829 External Air Tube Ring.

* 95A-300-7468 furnished with 200 p.s.i. fuel unit.

08021

BURNER ADJUSTMENT SETTINGS

American-Standard Boiler No.	Standard Burner Model No. & Spec. No.	"A" Nozzle to Face of Choke	"B" Nozzle To Spinner	"C" Nozzle to End of Air Tube	"D" Welded Burner Mounting Flange To Face of Choke	"D" Welded Burner Mounting Flange To End of Air Tube	"E" Nozzle To Point	ELECTRODE SETTING "F" Center Line Vertical	ELECTRODE SETTING "G" Spark Gap
FRA-504	92A-7240-D	---	1/8"	1-5/8"	---	3-3/8"	3/16"	1/2"	1/8"
FRA-505	92A-7242-D	---	1/8"	1"	---	3-3/8"	3/16"	1/2"	1/8"
FRA-506	95A300-7468-D	---	1/8"	5/8"	---	3-3/8"	1/16"	5/16"	3/32" to 3/16"
FRA-507	95A300-7468-D	---	1/8"	5/8"	---	3-3/8"	1/16"	5/16"	3/32" to 3/16"
FRA-508	96AM-7498-D	3/4"	1/4"	---	3-3/8"	3-1/4"	1/4"	1/2"	3/32" to 3/16"
FRA-509	96AM-7546-B	7/8"	1/8"	---	3-3/8"	3-1/4"	1/4"	1/2"	3/32" to 3/16"
FRA-510	96AM-7548-B	7/8"	1/8"	---	3-3/8"	3-1/4"	1/4"	1/2"	3/32" to 3/16"
FRA-511	96AM-7548-B	7/8"	1/8"	---	3-3/8"	3-1/4"	1/4"	1/2"	3/32" to 3/16"
FRA-706	96AM-7543-B	1-7/8"	1/8"	---	---	---	1/4"	1/2"	3/32" to 3/16"
FRA-707	96AM-7543-B	1-7/8"	1/8"	---	---	---	1/4"	1/2"	3/32" to 3/16"
FRA-708	96AT-7935-K	9/16"	1/8"	---	---	---	5/16"	1/4"	3/32" to 3/16"
FRA-709	96AT-7937-K	9/16"	1/8"	---	---	---	5/16"	1/4"	3/32" to 3/16"
FRA-710	970-8111-B	1-3/16"	5/16"	---	---	---	5/16"	3/8"	3/32" to 3/16"
FRA-711	970-8111-B	1-3/16"	5/16"	---	---	---	5/16"	3/8"	3/32" to 3/16"
FRA-712	97A-HiLo-7673-E	1-3/4"	1/8"	---	---	---	5/16"	1/4"	3/32" to 3/16"
FRA-713	97A-HiLo-7673-E	1-3/4"	1/8"	---	---	---	5/16"	1/4"	3/32" to 3/16"
FRA-714	98A-HiLo-7773-E	2-1/8"	3/16"	---	---	---	5/16"	1/4"	3/32" to 3/16"

08022

* THE DRAWINGS SHOWN BELOW ARE USED TO ILLUSTRATE THE ADJUSTMENT SETTINGS ONLY. THESE DRAWINGS DO NOT REFER TO ANY SPECIFIC BURNER MODELS IN THIS BOOKLET. (SEE PAGE 12)

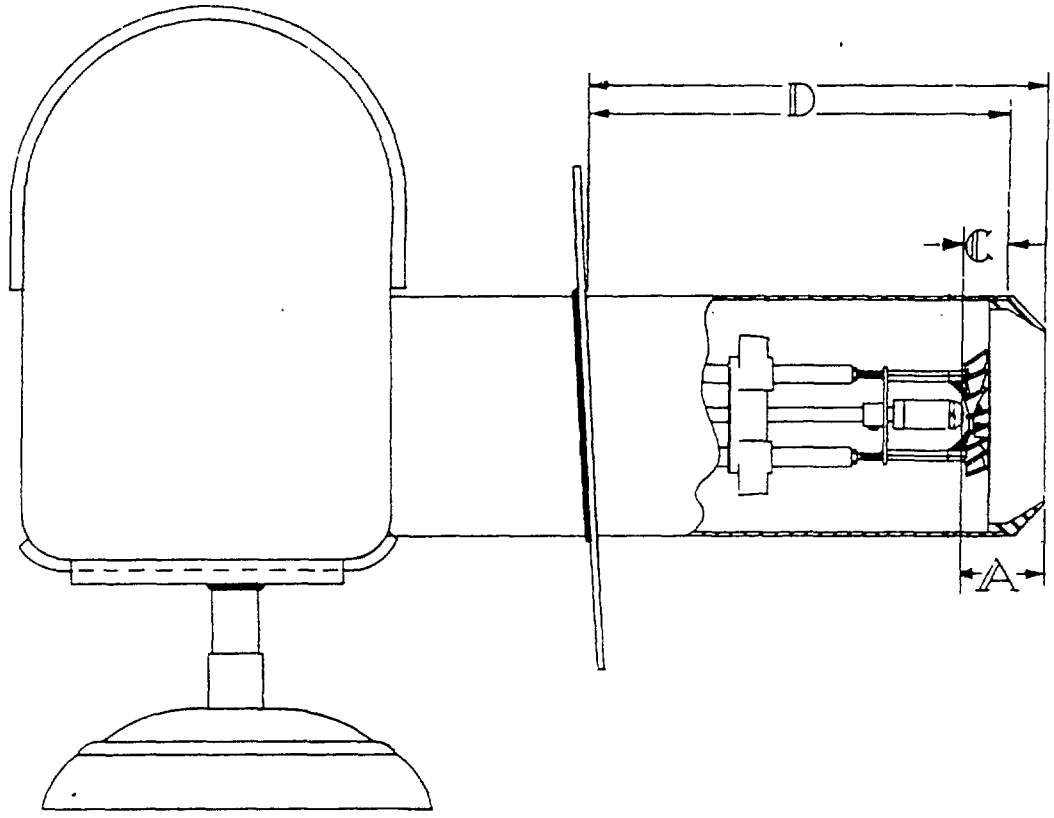

* TYPICAL OIL BURNER & DRAWER ASSEMBLY DRAWINGS

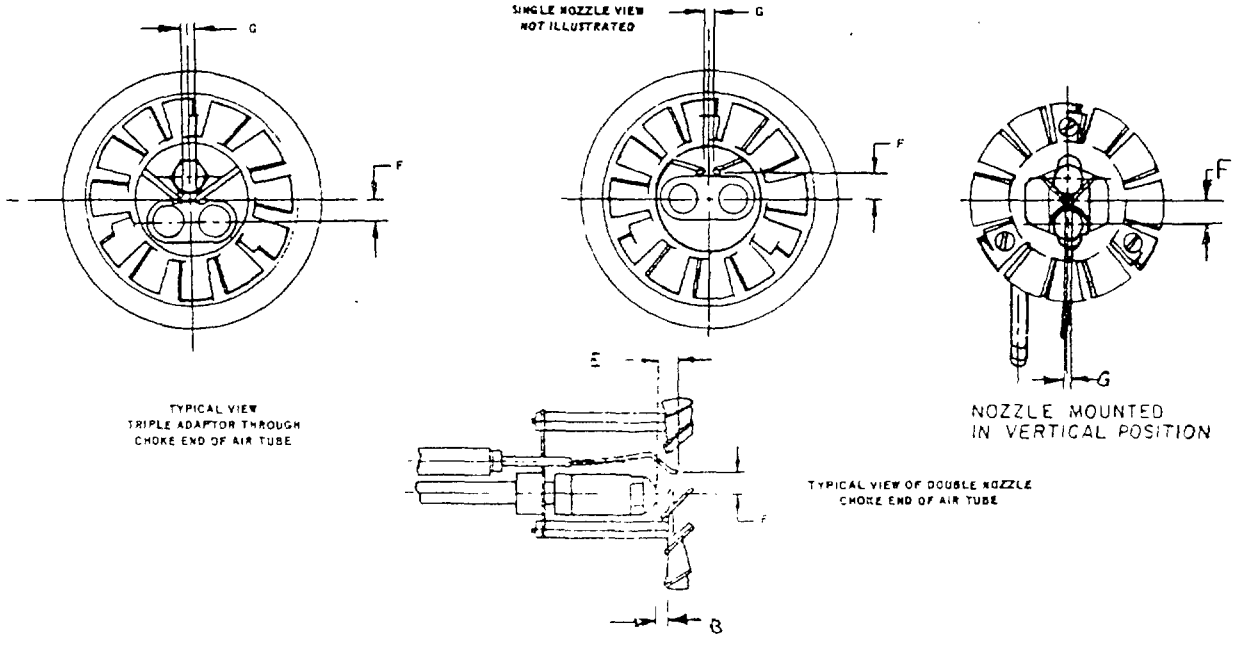

BURNER MOUNTINGS

PARTS INFORMATION

American-Standard Boiler No.	Standard Burner Model No. and Spec. No.	Air Tube Part No.	Welded Flange & Air Tube Assembly Part No.
FRA-504	92A-7240-D	---	A11724-S-7-3/4"-3-3/8"
FRA-505	92A-7242-D	---	A11724-S-7-3/4"-3-3/8"
FRA-506	95A300-7468-D	---	A11733-S-7-3/4"-3-3/8"
FRA-507	95A300-7468-D	---	A11733-S-7-3/4"-3-3/8"
FRA-508	96AM-7498-D	---	A10339-10-1/8"-3-1/4"
FRA-509	96AM-7546-B	---	A10339-10-1/8"-3-1/4"
FRA-510	96AM-7548-B	---	A10339-10-1/8"-3-1/4"
FRA-511	96AM-7548-B	---	A10339-10-1/8"-3-1/4"
FRA-706	96AM-7543-B	11236-10-1/8"	--------
FRA-707	96AM-7543-B	11236-10-1/8"	--------
FRA-708	96AT-7935-K	11236-10-1/8"	--------
FRA-709	96AT-7937-K	11236-10-1/8"	--------
FRA-710	970-8111-B	SA10251-10-1/4"	--------
FRA-711	970-8111-B	SA10251-10-1/4"	--------
FRA-712	97AHiLo-7673-E	SA10251-10-1/4"	--------
FRA-713	97AHiLo-7673-E	SA10251-10-1/4"	--------
FRA-714	98AHiLo-7773-E	SA10258-12-1/4"	--------

* #8445 adjustable flange mounting used on 92A-7244-A burner.

**These burner models are furnished with pedestal mounting. When a replacement pedestal is ordered, always specify burner model number and boiler model number.

BURNER RATING CAPACITY CHART

Boiler Number	Standard Burner No. & Spec. No.	Burner Rating	Gallons Per Hour Min.	Gallons Per Hour Max.
FRA-504	92A-7240-D	8	3.25	4.50
FRA-505	92A-7242-D	8	3.25	4.50
FRA-506, FRA-507	95A-300-7468-D	4	3.00	7.00
FRA-508	96A-M-7498-D	2	3.00	7.00
FRA-509	96A-M-7546-B	4	6.00	8.00
FRA-510, FRA-511	96A-M-7548-B	5	7.00	11.00
FRA-706, FRA-707	96A-M-7543-B	1	6.00	14.00
FRA-708	96A-T-7935-K	3	10.00	13.00
FRA-709	96A-T-7937-K	4	13.00	16.00
FRA-710, FRA-711	970-8111-B	2	15.00	20.00
FRA-712, FRA-713	97A-HiLo-7673-E	6	20.00	24.00
FRA-714	98A-HiLo-7773-E	1	22.00	26.00

MOTORS FOR A.B.C. OIL BURNERS

Marathon Electric Mfg. Corp., Wausau, Wisconsin

Standard Burner Model	ABC Part No.	MFRS. Part No.	H. P.	Frame	Voltage and Cycles	Type	Shaft DIA.	Shaft FLAT
92A-7244		SPD56S						
92A-7240		34T						1
92A-7242	6848	62AWCW	1/4	56-5	115-60	SS	1/2"	1-3/8"
95A-300-7468								
96A-M-7498								
96A-M-7546								
96A-M-7548		151F84			115-230			2
96A-M-7543	6781	CW	1/3	56-5	60	SCS	5/8"	2-3/8"
96AB-8316								
96AB-8317								
96AB-8318-JC-T								
96A-T-7935								2
96A-T-7937		P56C34			115-230			3-1/4"
970-8111	11404	D322A	1/2	56-8	60	SCS	5/8"	1 Keyway
								2
97A-HiLo-7668-E4		P56C34			115-230			3-1/4"
97A-HiLo-7673-E	10932	D265D	1	56-12	60	SCS	5/8"	1 Keyway
		182TCDR						2
98A-HiLo-7773-E	10948	7005AA CW	2-3/4	182-T	230-60	SCS	5/8"	3-1/4" 1 Keyway

*Type: SS/Split Phase; SCS/Split Phase Capacitor Start.

Motors for all "90" Series Burners -- 3,450 R.P.M.

TWO-STAGE FUEL UNITS FOR A.B.C. OIL BURNERS

Sundstrand Hydraulics - Rockford, Illinois

Webster Electric - Racine, Wisconsin

Standard Burner Model	A.B.C. Part No.	Manufacturer Name	Manufacturer Part No.	Shaft DIA.	Shaft FLAT
92A-7244, 92A-7240 92A-7242	12135	Sundstrand	HA2PB100	7/16"	1 1-3/16"
95A-300-7468	10524	(200 Psig Fuel Unit) Sundstrand	H4PBC100H	7/16"	1-3/16"
96A-B-8316-JC-T 96A-B-8317-JC-T 96A-B-8318-JC-T 96-7506, -7; 96-7508, -9; 96A-M-7498, 96A-M-7546, 96A-M-7548, 96A-M-7543, 96A-T-7935, 96A-T-7937, 970-8111, 97-7606, -7; 98-770, -7; 97A-HiLo-7668-E4 97A-HiLo-7673-E, 98A-HiLo-7773-E	9758	Webster	22R211D*1A3	7/16"	1 2-1/8"
98A-HiLo-7773-E	10612	Webster	22R613D*1A3	7/16"	1 2-1/8"

Other Listed Fuel Units, Sundstrand And Webster 3,450 R.P.M.

*Manufacturer's Part Number: Asterisk (*) in part number indicates by-pass plug will be in the left inlet port when the fuel unit is mounted with the valve shown. Fuel units carrying a similar part number with a dash (-) instead of an asterisk (*) will have the by-pass plug in the right inlet port when the fuel unit is mounted with the valve shown.

TRANSFORMERS FOR A.B.C. BURNERS:

France Mfg. Co. - Cleveland, Ohio
Webster Electric - Racine, Wisconsin
Allanson Mfg. Corp. - Niagara Falls, New York

Standard Burner Model	A.B.C. Part No.	Manufacturer Name	Manufacturer Part No.	Type	Burner
All "90" Series Burners	6850	France	LEEW-2	Stud	1
	6937	Webster	312-27ABE174		
	6949	Allanson	421-410		