OPERATING MANUAL
AMS EMERGENCY KILL SYSTEM
ABERDEEN PVC PLANT

September 1, 1981

FINAL ISSUE

Richard D. Melling

Work by: Richard D. Melling
Senior Process Engineer
Chemicals Division
Phocess Engineering Department

conoco

Interoffice Communication

To C. L. Miller, Aberdeen, Mississippi

From R.D. Melling, Ponca City, Oklahoma

Date September 1, 1981

Subject Emergency Kill System Operating Manual

The final issue of the Emergency Kill System Operating Manual is attached. This issue incorporates comments and suggestions from the August 18 plant review meeting.

Richard D. Melling

Richard D. Melling
Senior Process Engineer
Chemicals Division
Process Engineering Department

ms
Enc

CC:
RAF:SJV:PEM:JAD:MPB
CRM:JAB:JLW:JHM

File: A-20.3

TABLE OF CONTENTS

OPERATING MANUAL

AMS EMERGENCY KILL SYSTEM

ABERDEEN PVC PLANT

		Page No.
I.	INTRODUCTION	1
	A. PURPOSE	1
	B. OPERATOR RESPONSIBILITIES	1
	C. PROCESS INFORMATION	1
II.	GENERAL PROCESS DESCRIPTION	3
III.	SAFETY	5
IV.	OPERATING PROCEDURES	8
	A. INJECTION PROCEDURES	8
	B. ROUTINE OPERATION	12
	C. TESTING PROCEDURES	15
V.	APPENDIX	17
VI.	P&I DIAGRAMS	26

I. INTRODUCTION

A. Purpose

The purpose of the Emergency Kill System is to increase the reliability and effectiveness of equipment and procedures used to safely and quickly stop the polymerization reaction in the reactors. Stopping the reaction prevents excessive pressure buildup which can cause emergency releases through the reactor relief valves. This system allows any or all reactors to be shut down in an orderly and safe manner. This manual describes the system and the operator's responsibilities for operating and maintaining the system.

B. Operator Responsibilities

The operator is responsible for producing quality products in a safe and efficient manner. He fulfills his responsibilities by knowing the following and passing a written exam:

1. Understanding how his equipment functions.
2. Understanding what role each piece of equipment plays in the process.
3. Keeping a close and regular check on equipment.
4. Knowing how to spot malfunctions and correct them.
5. Keeping his area of responsibility safe and clean.
6. Keeping complete and accurate records.

C. Process Information

The polymerization reaction of VCM to form PVC gives off heat and accelerates as temperature increases. As the temperature increases, the reactor pressure also increases. It is therefore necessary to remove the heat of reaction with cooling

I. INTRODUCTION (CONTINUED)

C. Process Information (Continued)

water in the reactor jacket and condenser. Reactor agitation is also required to maintain uniform reactor mixing and efficient heat removal.

If reactor cooling and/or agitation is lost, the reaction must be stopped. Failure to do so would result in a runaway reaction with increasing temperature and pressure. The reactor pressure could increase until the rupture disk/safety valve assemblies would vent the reactor contents to the atmosphere. The new Emergency Kill System provides the capability of injecting up to 25 gallons of killing agent into each reactor either remotely from the control room or manually at the reactor top head platform. Killing agent can be injected into a reactor as soon as agitation is lost to take advantage of mixing caused by residual swirling motion. Maintaining cooling water flow after loss of agitation will also help mixing by refluxing in addition to removing heat of reaction.

II. GENERAL PROCESS DESCRIPTION

Refer to the attached P&I diagrams for the complete system layout for each reactor area.

Emergency kill injection pots are provided at grade level for each reactor. All injection pots are to be maintained at 300 psig pressure using high pressure nitrogen cylinders. A separate nitrogen cylinder and spare are provided for each injection pot. Level gauges and pressure gauges are provided on each pot in addition to board-mounted low pressure alarms and low level indicators. The A operator should check the appropriate injection pot level and pressure before starting each reactor charge sequence. Killing agent can be injected into the reactor either remotely by the lead operator or locally by the A operator. Normally, the emergency kill system will be activated from the board to minimize time and maximize mixing. One switch for each reactor operates automatic double block valves at the reactor top head level. Placing the switch in automatic mode opens the valves and allows a low level switch in the injection pot to close the valves. Placing the switch in the momentary-contact manual mode also opens the valves but the valves close when the switch is released. Each injection pot low level switch also activates a local light at the manual injection point at the reactor top head level. The automatic closure of the remote injection valves and the local low level indicator light are provided to prevent nitrogen from being injected into the reactor, blanketing the condenser and reducing cooling efficiency.

II. GENERAL PROCESS DESCRIPTION (CONTINUED)

Emergency injection headers are provided at the reactor top head level in each reactor area. These headers will allow any injection pot to be used to kill any reactor in each area or to inject additional killing agent if needed. The procedure requires two hoses, one to connect an injection pot to the header, and one to connect the header to the reactor. Killing agent can then be injected locally by the A operator or remotely by the lead operator. It should be noted that when the emergency injection header is used, the injection pot low level switch will neither automatically close the remote injection valves nor light the appropriate local indicator light. Caution should be taken to prevent charging nitrogen into the reactor.

The remote injection automatic valves will be operated by nitrogen supplied by a high pressure nitrogen cylinder and spare. A board-mounted low pressure alarm is provided for each area to alert the board operator when the cylinder in use has dropped below 600 psig. A cylinder with less than 600 psig pressure does not contain enough nitrogen to operate the control valves and should be immediately changed out with a full cylinder.

III. SAFETY

The operation of the emergency kill system does not present any extremely hazardous situations. In fact, it's main purpose is to reduce the potential for having hazardous situations in the reactor area. However, some potential hazards are present and precautions should be taken to prevent serious incidents.

A. The killing agent AMS has been in use for some time in the plant and the operators should already be familiar with the corresponding safety hazards and proper handling procedures. The attached vendor literature describes chemical properties and safe handling procedures. It should be emphasized that AMS is highly reactive in the presence of the peroxide initiators used in the plant. AMS AND INITIATOR SHOULD NEVER BE MIXED UNDER ANY CIRCUMSTANCES.

B. The new AMS injection pots will be maintained at 300 psig by high pressure nitrogen cylinders. Due caution should be exercised in the handling of nitrogen cylinders. Operators should avoid damaging the outlet valves on these cylinders. The AMS injection pots will contain AMS under 300 psig pressure, so proper safety precautions should be taken while working with or near these vessels.

The injection pots must be depressurized before the block valves on the pot funnel or AMS fill line are opened. The nitrogen supply to a pot should be turned off at the pot prior to venting the pot. The pots should only be vented through the bleed valve on the pressure gauge/pressure switch piping on the top of the pots. POTS SHOULD NEVER BE VENTED THROUGH THE FUNNELS ON THE SIDE OF THE POTS.

III. SAFETY (CONTINUED)

C. The rupture disk and relief valve assemblies for each injection pot are set to relieve at 400 psig, the vessel design pressure. Since nitrogen bottle regulators occasionally leak through, a potential exists for overpressuring the injection pots and causing the rupture disk to burst. Even if the killing agent didn't spray out when the relief devices opened, it is probable the relief valve would not completely reseat and the nitrogen bottle would slowly depressure through the pot and relief valve to atmosphere. The outside operator should routinely check injection pot pressures to insure it is neither too low nor too high.

D. The AMS killing agent is a volatile hydrocarbon, and thus fire and explosions are theoretically possible. Precautions should be taken to prevent spills and excessive accumulation of flammable vapors.

E. Since the injection pots are connected to the reactors, a potential exists for backing VCM into the pots. This poses no serious immediate problem since the AMS would kill any reaction that was occurring. However, it could present an exposure problem later when the injection pot is opened. The injection pots should be maintained at 300 psig pressure except when refilling.

F. Finally, operators should keep in mind that this system will be used when the plant is in an upset condition, i.e., power failure, loss of cooling water, reactor runaway, etc. It is

III. SAFETY (CONTINUED)

critical that this system must operate properly in such an emergency. System maintenance and operator familiarity with this system are equally important factors ensuring the dependability of this system.

IV. OPERATING PROCEDURES

A. Injection Procedures

1. The emergency kill system should be activated under the following circumstances:

   a. Extended loss of cooling water to a reactor in polymerization mode.

   b. Extended loss of agitation to a reactor in polymerization mode. When agitation is lost, it is important to kill the reaction as soon as possible. The reactor contents will continue to swirl for about four minutes after agitator shutdown, and AMS injection during this period is much more effective.

   c. A runaway reaction with increasing temperature and pressure which is not responding to small AMS injections (short stop) from the initiator charge pot.

   d. Any other circumstance considered by the operator to represent a significant chance of over pressuring the reactor or affecting safe operation of the plant.

2. The emergency kill system must be activated if the reactor reaches the following pressures for the following products:

a. 5305 with CTA	155 psig
b. 5305 without CTA	165 psig
c. All other products	145 psig

3. Lead Operator Duties

   a. The lead operator should remotely inject AMS into the polymerizing reactors which require killing by placing the appropriate hand switches in the AUTO mode.

IV. OPERATING PROCEDURES (CONTINUED)

A. Injection Procedures (Continued)

2. Lead Operator Duties (Continued)

b. The lead operator should then check for confirmation of AMS injection from the board-mounted low level indicating lights, and from the A operator via radio. Injection time should be about 30 seconds. The board-mounted injection pot low pressure alarms will normally be tripped during AMS injection. If the pressure and level alarms are not tripped, the automatic AMS injection line may be plugged requiring manual injection.

c. After AMS injection, the lead operator should closely monitor the reactor temperature and pressure. If cooling water has been lost, he should take steps to restore cooling as soon as possible.

d. If additional killing is required, the momentary-contact manual switch can be used. Caution should be exercised to prevent nitrogen from entering the reactor and blanketing the condenser.

e. If excess nitrogen does enter the reactor, the condenser should be vented to the recovery system.

3. A Operator Duties

a. The A operator is responsible for field-checking AMS injection to each of the reactors to be killed. He should confirm that the injection pot level is at the low level mark on the level gauge. Too high a level

IV. OPERATING PROCEDURES (CONTINUED)

A. Injection Procedures (Continued)

3. A Operator Duties (Continued)

means not enough AMS was injected. No level may mean nitrogen has entered the reactor.

b. The A operator should also check the pressures of the nitrogen cylinders used for AMS injection. Any cylinder with a pressure lower than 750 psig should be changed out to allow for a second AMS injection.

c. After checking the injection pot and nitrogen cylinders, the A operator should proceed to the reactor top level to confirm that the automatic injection valves are closed. If the valves are open, he should manually block in the line and inform the lead operator that nitrogen has entered the reactor. It may be necessary to vent nitrogen to the recovery system to maintain reactor cooling.

d. If the automatic injection system failed to work, the A operator should manually inject AMS to the reactor. He should open the manual double block injection valves, wait for the injection pot low level indicator light to light, then immediately close the double block valves. The valves should also be immediately closed if the line begins to vibrate from flowing nitrogen.

IV. OPERATING PROCEDURES (CONTINUED)

A. Injection Procedures (Continued)

3. A Operator Duties (Continued)

e. If additional injection is required, the A operator should prepare the emergency injection header for use. This header is supplied to allow any injection pot to be used for any reactor. This is accomplished by connecting one hose from a full and pressurized pot to the header and connecting a second hose from the header to the appropriate reactor. Injection can then proceed either locally or from the board. Caution should be exercized when using this header since the injection pot low level switches will not work correctly and nitrogen may enter the reactor.

f. As soon as possible after injection, the A operator should refill the empty AMS pots and prepare for a second injection if needed.

1. Close the block valve on the nitrogen supply line at the pot.

2. Depressure the pot through the pressure gauge vent valve.

3. Refill the pot with AMS from a 55-gallon drum using the air operated drum pump supplied with the system. An alternate filling procedure is to manually pour AMS into the funnel on the side of the injection pot.

IV. OPERATING PROCEDURES (CONTINUED)

A. Injection Procedures (Continued)

3. A Operator Duties (Continued)

f. (Continued)

4. Block in the pot and repressure with nitrogen from the nitrogen bottles.

g. Radio communication between the lead operator and the A operator should be maintained. The A operator should inform the lead operator how the system is operating and what is being done in the field. The lead operator should keep the A operator informed of reactor pressures and any apparent need for additional AMS injection.

B. Routine Operation

1. A reactor should not be charged unless its AMS injection system is in proper operating condition. It is the responsibility of the A operator to check this in the field and notify the lead operator prior to each reactor charge. The following items should be checked immediately before each charge:

a. The AMS level in the injection pot should be at the full mark on the level glass.

b. The pressure in the injection pot should be 300 psig. This should be checked both on the injection pot pressure guage and on the nitrogen cylinder regulator outlet pressure guage.

IV. OPERATING PROCEDURES (CONTINUED)

B. Routine Operation (Continued)

c. The block valve in the AMS line near the injection pot should be fully open.

d. The block valve in the AMS line at the reactor top head level near the hose connection should be fully open.

e. Both block valves on the manual AMS injection line should be fully closed.

If any of the above conditions are not met, they should be corrected before the reactor is charged.

2. To insure proper operation of the system, the following items should be checked by the A operator at the beginning of each shift:

a. The pressure of the nitrogen cylinders being used for AMS injection should be at least 1200 psig. Cylinders with lower pressures should be changed out with full cylinders. EMPTY BOTTLES ARE NOT TO BE LEFT IN THE BOTTLE RACKS.

b. The pressure of the nitrogen cylinder being used to actuate the automatic AMS injection valves should be at least 600 psig. Cylinders with lower pressures should be changed out with full cylinders. The pressure on the outlet of the regulator for this cylinder should be 100 psig.

IV. OPERATING PROCEDURES (CONTINUED)

B. Routine Operation (Continued)

c. The pressure gauges between the double block valves on both the automatic and the manual injection lines should routinely be bled to 0 psig. If pressure subsequently builds up on these guages, it indicates that one or both of the double block valves are leaking.

Note: These gauges will have pressure on them after AMS injection.

d. All spare nitrogen cylinders in the racks should be full, i.e., cylinder seals are intact.

The above items are vital to the proper operation of the emergency kill system. If any of these conditions are not met, they should be immediately corrected.

3. Other items which should be checked on a routine basis are:

a. The automatic AMS injection line reactor nozzles should be checked for plugging. This can be done while the reactor is being rinsed. Full port ball valves have been provided on this line so that a rod or long wire brush can be run through the line to knock out plugging. This line should be checked once a week when the system is being tested.

b. The manual AMS injection line reactor nozzles should also be checked for plugging on a weekly basis. This should be done in a manner similar to that used for checking the automatic injection line.

IV. OPERATING PROCEDURES (CONTINUED)

C. Testing Procedures

1. The AMS injection system for each reactor will be tested weekly on a schedule set up by the process superintendent. Each system will be checked for line pluggage and valve operation. The testing procedure is outlined below:

a. The A operator should perform a complete visual check of the system to be tested both at grade level and at the reactor top head level.

b. He should then contact the lead operator on the radio and confirm that the reactor and Emergency Kill System are ready to be tested.

c. He may then manually inject approximately one gallon of AMS to the reactor by opening the manual injection valves for approximately two seconds.

d. After AMS has been injected manually, the A operator should close the block valve near the hose connection and notify the lead operator that the automatic system is ready for testing. The lead operator may then remotely cycle the injection valves using the momentary-contact MANUAL mode of the control valve hand switch.

e. During automatic AMS injection testing, the A operator should be checking for proper operation of the system, i.e., control valves, actuators, and solenoids.

IV. OPERATING PROCEDURES (CONTINUED)

C. Testing Procedures (Continued)

f. After automatic injection testing, the A operator should rod out the vertical sections of line at both reactor injection nozzles to confirm the nozzles are not plugged.

3. The following must be done following a test prior to charging the reactor:

a. The pot should be refilled with AMS.

b. The pot should be pressurized to 300 psig.

c. The AMS injection nitrogen cylinder pressure should be checked (above 1200 psig).

d. The pressure of the nitrogen cylinder used to supply instrument air to the automatic AMS injection control valves should be checked (above 600 psig).

e. The manual block valve at the reactor top head level near the hose connection should be reopened.

V. APPENDIX

STORAGE AND HANDLING OF ALPHA-METHYL STYRENE

Alpha-Methyl styrene is usually stored and handled in steel equipment. It is also compatible with stainless steel, aluminum, and galvanized iron. Copper and copper alloys are not recommended for this service.

This product has a fairly low freezing point (about -10°F) and low viscosity. Underground storage tanks and lines should be considered, as their use will prevent freezing in winter and keep the product cool in summer. Storage temperature should not exceed 100°F. Storage under a nitrogen blanket is preferred; exclusion of air (oxygen) will reduce the chances of polymerization, peroxide formation, and fire.

Piping can be of the materials listed above. A centrifugal pump is suggested for transfer service. "Teflon" is suitable for gaskets and packing.

An inhibitor, para-tertiary butyl catechol (10-20 ppm), is used in alpha-methyl styrene to inhibit polymerization. If storage time is prolonged, the inhibitor concentration should be checked occasionally and more inhibitor added, if needed. Alpha-Methyl styrene is a toxic chemical; contact with liquid or vapors should be avoided.

α-METHYLSTYRENE

REACTIVE CHEMICALS

CHEMICAL NAME: α-Methylstyrene

SYNONYMS: Isopropenylbenzene, alpha-methylstyrene, 2-phenylpropene, 1-methyl-1-phenylethylene

CHEMICAL FORMULA: C_9H_{10}

CHEMICAL STRUCTURE:

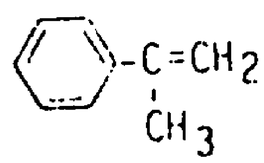

PHYSICAL PROPERTIES

Appearance	Water-white liquid
Molecular weight	118.18
Flammability limits, vol %, upper	6.1
lower	1.9
Flash point, open cup, °C (Tag)	52 (126°F)
closed cup, °C (Tag)	44 (112°F)
Autoignition temperature in air, °C	575 (1066°F)
Boiling point at 760 mm Hg, °C	165.4
at 10 mm Hg, °C	48.5
Freezing point, °C	-23.2
Vapor pressure, mm Hg at 20°C	1.9
Solubility, wt % in water (20°C)	<0.1
water in	<0.1
Specific gravity at 20/4°C	0.9106
Heat of vaporization at 1 atm, Btu/lb	140
Heat of combustion at 25°C, Btu/lb	17,748
Coefficient of expansion at 20°C, vol/°C	0.00096
Viscosity at 20°C, cps	0.94

Revised 3/15/76

Some significant reactions with the more common chemicals are briefly discussed below:

Oxidation - Forms aldehydes and peroxides if exposed to air (oxygen). Can be epoxidized and is attacked by strong oxidizing agents.

Hydrogenation - Can be hydrogenated catalytically in the presence of metals. The unsaturated vinyl group and the aromatic ring can both be hydrogenated under selective conditions.

Halogenation - Characteristic addition to the vinyl group and substitution on the aromatic ring can occur with halogens such as chlorine or bromine.

These exothermic addition reactions generally require catalysts and/or elevated temperatures and are not considered hazardous if properly controlled. However, reaction with chlorine which occurs at ambient temperatures can be violent in the presence of light. Accidental contact of α-methylstyrene with halogens or halogen-containing compounds must be prevented.

Acids - Under special conditions, the aromatic ring may be attacked by concentrated nitric or sulfuric acids. These reactions must be carefully controlled to avoid hazardous consequences. Also, hazardous oxidation may occur by contact with concentrated nitric acid.

Methoxylation - α-Methylstyrene can be reacted under special conditions with formaldehyde or CO-H_2 in the presence of a catalyst to yield an aldehyde or alcohol. This reaction is considered to be nonhazardous as it is unlikely to occur accidentally.

The above discussed reactions other than oxidation, halogenation, and polymerization are generally considered to be nonhazardous. However, when conducted in the plant or laboratory, all of the reactions of α-methylstyrene should be properly controlled to avoid hazardous consequences.

Revised 3/15/76

If the UCC customer wants to use rubber hoses for unloading tank trucks, the recommended materials are Viton A or polyethylene lining and steel or 304 SS fittings. Both Uniroyal and Goodyear manufacture rubber hoses with a Viton A or polyethylene liner. [redacted]. Other elastomers such as neoprene, butyl, buna-N, etc., are not recommended for handling AMS because they will be chemically attacked by the AMS. Another type of hose that can be used is 304 SS flexible metal hose. or Teflon-lined.

A-METHYL STYRENE

This is a summary of single exposure studies on animals. The data indicate the relative degree of hazard in handling the product. Increasing degrees of hazard are expressed by these terms: slight, moderate, definite, serious. It must be remembered that results of experiments on animals cannot be numerically translated to probable human response.

The National Research Council defines toxicity as the capacity of a substance to produce injury. Hazard is the probability that injury will result from the handling or use of the substance in the quantity, frequency and manner proposed.

Toxicity is only one factor important in determining the degree of hazard in handling a chemical or in a proposed use. Physical properties of the chemical together with extent and frequency of exposure are equally important.

The term LD_{50} has been adopted as a uniform expression of single dose toxicity for comparing one chemical with another. It refers to that quantity of chemical which kills 50 per cent of exposed animals. For further uniformity, quantities are expressed in grams or milliliters of chemical per kilogram of animal body weight.

Single skin penetration refers to a covered 24-hour skin contact with the liquid chemical.

Single inhalation refers to continuously breathing a certain concentration of chemical vapors for a specified period of time.

Primary irritation refers to the skin response following uncovered skin contact. A covered contact can be expected to have a more severe effect.

Eye injury refers to surface damage produced by contact of the eye with the chemical.

Legal responsibility is assumed only for the fact that all studies reported here, and all opinions, are those of qualified experts.

Single oral dose in rats: moderate hazard.
LD_{50} = 6.50 ml per kilogram of body weight.
For comparison, isopropanol has an LD_{50} of 5.84 grams/kg.

Single skin penetration in rabbits: slight hazard.
16.0 ml/kg body weight killed 3 of 7 animals from a 24 hour covered exposure.
This result suggests that skin penetration in harmful amounts is not apt to occur.

Single inhalation by rats: slight hazard.
Breathing vapors in a state approaching saturation in room air for 8 hours killed 2 of 6 animals.

Skin irritation, rabbit belly: moderate hazard.
The undiluted chemical caused redness of short duration on the tender skin of the rabbit belly.

Eye injury, rabbits: slight hazard.
The undiluted chemical caused no irritation when an excess was instilled in the rabbit eyes.

TYPED
5/24/77

A-METHYL STYRENE

TLVs — Threshold Limit Values (for 1979)

Substance	TWA ppm[a]	TWA mg/m³[b]	STEL ppm[a]	STEL mg/m³[b]
[illegible]	750	1760	1000	2375
[illegible] acid (liquid)	—	5	—	—
[illegible] Acid	10	30	—	—
[illegible]ylonitrile	A1b	A1b	—	—
[illegible] and homologues — Skin	2	10	5	20
[illegible]timony, soluble salts (as Sb)	—	2	—	—
[illegible]timony trioxide production	—	—, A2	—	—
[illegible]enic (soluble), as As	—	0.2	—	—
[illegible]enic trioxide production	—	—, A2	—	—
[illegible]stos	—	0.1	—	0.3
[illegible]dane	800	1900	—	—
Butoxyethanol (Butyl Cellosolve)-Skin	25	120	75	360
n-Butyl alcohol	100	305	150	455
Butyl glycidyl ether (BGE)	25	135	—	—
sec Butylphenol — Skin	5	—	—	—
[illegible]dmium oxide production	—	—, A2	—	—
[illegible]arbon disulfide	10	30	—	—
[illegible]arbon tetrachloride — Skin	5, A2	30, A2	20	125
[illegible]rbonyl fluoride	2	5	5	15
[illegible]loroacetyl chloride	0.05	0.2	—	—
[illegible]loromethyl methyl ether	A1b	A1b	—	—
[illegible]-Chloro-1-nitropropane	2	10	—	—
[illegible]lorodiphenyl (42%)	1000	6320	—	—
[illegible]-Chloroprene — Skin	10	45	—	—
[illegible]romium metal	—	0.5	—	—
[illegible]romium (II) compounds (as Cr)	—	0.5	—	—
[illegible]romium (III) compounds (as Cr)	—	0.5	—	—
[illegible]romium (VI) compounds (as Cr) Water soluble Cr VI compounds	—	0.05	—	—
Certain water insoluble Cr VI compounds	—	0.05, A1a	—	—
Chrysene	A2	A2	—	—
Cobalt metal, dust & fume (as Co)	—	0.05	—	0.1
Cyanogen chloride	0.3	0.6	—	—
Cyclohexanone	25	100	100	400
Cyclopentane	600	1,720	900	2,580
Dalapon	1	—	—	—
1, 2-Dibromoethane — Skin	A1b	A1b	—	—
[illegible]	[illegible]	[illegible]	[illegible]	60

Substance	TWA ppm[a]	TWA mg/m³[b]	STEL ppm[a]	STEL mg/m³[b]
† 1, 1-Dichloro-1-nitroethane	2	10	10	60
Dichloropropene	1	5	10	50
Diethanolamine	3	15	—	—
† Diethylamine	10	30	25	75
† Diethyl ketone	200	705	—	—
† Diglycidyl ether (DGE)	0.1	0.5	—	—
† Dioxane, tech. grade — Skin	25	90	100	360
† Diprepyl ketone	50	235	—	—
Divinyl benzene	10	50	—	—
Epichlorhydrin — Skin	2	10	5	20
† 2-Ethoxyethanol — Skin	50	185	100	370
† 2-Ethoxyethyl acetate (Cellosolve acetate) — Skin	50	270	100	540
† Ethyl acrylate — Skin	5	20	25	100
Ethylene dibromide, see 1, 2-Dibromoethane	A1b	A1b	—	—
Ethylene dichloride, see 1, 2-Dichloroethane	10	40	15	60
†C Ethylene glycol, vapor	50	125	—	—
† Ethylene glycol dinitrate	0.02	0.2	0.04	0.4
† Ethylene oxide	10	20	—	—
† Furfural — Skin	2	8	—	—
† Glycidol (2, 3-Epoxy-1-propanol)	25	75	100	300
Hexachlorobutadiene	A2	A2	—	—
† Hexane (n-hexane)	25	90	100	350
(other isomers)	500	1,800	—	—
† Hexone (Methyl isobutyl ketone) — Skin	50	205	75	300
C Hydrogen cyanide — Skin	10	10	—	—
2-Hydroxypropyl acrylate — Skin	0.5	3	—	—
† Isopropoxyethanol	25	105	75	320
n-Isopropylaniline — Skin	2	10	5	20
† Mesityl oxide	15	60	25	100
† Methacrylic acid	20	70	—	—
† Methyl n-amyl ketone (2-Heptanone)	50	235	100	465
† Methyl bromide — Skin	5	20	15	60
† Methyl n-butyl ketone	5	20	—	—
† Methyl chloride	50	105	100	205
Methylene chloride (dichloromethane)	100	350	500	1,700
4, 4-Methylene dianiline	0.1	0.8	0.5	4
† Methyl iodide — Skin	2, A2	10, A2	5	30
† Methyl isopropyl ketone	200	705	—	—
† Methyl silicate	1	6	5	30
α-Methyl styrene	50	240	100	485
† Nitrogen dioxide	3	6	5	10
† Nitroglycerin	0.02	0.2	0.04	0.4
† 1-Nitropropane	15	55	25	90

Substance	TWA ppm[a]	TWA mg/m³[b]	STEL ppm[a]	STEL mg/m³[b]
† Phenyl ether — Diphenyl mixture (vapor)	0.5	4	2	[illegible]
Phosphorous pentachloride	0.1	1	—	—
† Platinum metal	—	1	—	—
† β-Propiolactone	0.5, A2	1.5, A2	1	[illegible]
Propionic acid	10	30	15	[illegible]
† Propylene glycol dinitrate	0.02	0.2	0.04	[illegible]
† Propylene oxide	20	50	—	—
Silver, metal	—	0.1	—	—
† Silver, soluble compounds (as Ag)	—	0.01	—	—
Sodium bisulfite	—	5	—	—
Sodium metabisulfite	—	5	—	—
† Styrene, monomer (phenylethylene)	50	215	100	[illegible]
Sulfur dioxide	2	5	5	[illegible]
C Terphenyls	0.5	5	—	[illegible]
Tetrasodium pyrophosphate	—	5	—	—
† Toluene-2, 4-diisocyanate (TDI)	0.005	0.04	0.02	0.1
† Tributyl phosphate	0.2	2.5	0.4	[illegible]
Trichloroacetic acid	—	1	—	—
† Trichloroethylene	50	270	150	[illegible]
† Trimellitic anhydride	0.005	0.04	—	—
† Vanadium (V_2O_5), as V, dust & fume	—	0.05	—	—
Vinyl bromide	5, A2	20, A2	—	—
Vinyl chloride	5, A1a	10, A1a	—	—
† Vinyl toluene	50	240	100	[illegible]
† Wood dust, hard wood (as in furniture making)	—	1	—	—

NOTICE OF INTENDED CHANGES
MINERAL DUSTS

Substance	TLV
Asbestos	
Amosite	0.5 fiber/cc, A1a
Chrysotile	2 fibers/cc, A1a
Crocidolite	0.2 fiber/cc, A1a
Tremolite	0.5 fiber/cc, A1a
Other forms	2 fibers/cc, A1a
Diatomaceous earth, natural	1.5 mg/m³, Respirable dust
Silica, amorphous	6 mg/m³, Total dust (all sampled sizes)
	3 mg/m³, Respirable dust (< 5 μm)
Talc (fibrous)	0.5 fiber/cc

VAB.0001132724

MATERIAL SAFETY DATA SHEET

(Approved by U.S. Department of Labor "Essentially Similar" to Form LSB-OOS 4)

PRODUCT NAME: *alpha*-METHYLSTYRENE

CHEMICAL NAME: ---

CHEMICAL FAMILY: Aryls

FORMULA: $C_6H_5C(CH_3):CH_2$

MOLECULAR WEIGHT: 118.18

SYNONYMS: Isopropenylbenzene; α-methylstyrene; 2-phenylpropene; 1-methyl-1-phenylethylene

I. PHYSICAL DATA

BOILING POINT, 760 mm. Hg	165.4°C.(329.7°F.)	FREEZING POINT	−23.2°C.
SPECIFIC GRAVITY (H_2O = 1)	0.9116 at 20/20°C.	VAPOR PRESSURE AT 20°C.	1.9 mm. Hg
VAPOR DENSITY (air = 1)	4.1	SOLUBILITY IN WATER, % by wt.	0.06
PER CENT VOLATILES BY VOLUME	~100	EVAPORATION RATE (Butyl Acetate = 1)	0.22
APPEARANCE AND ODOR	Colorless liquid; characteristic odor.		

II. HAZARDOUS INGREDIENTS

MATERIAL	%	TLV (Units)
Methylstyrene	~100	100 ppm. ceiling
(See Sections III through VIII)		See 1979 Notice of Intended Ch.

III. FIRE AND EXPLOSION HAZARD DATA

FLASH POINT (test method(s))	112°F., Tag closed cup ASTM D 56 126°F., Tag open cup ASTM D 1310

FLAMMABLE LIMITS IN AIR, % by volume	LOWER	1.9	UPPER	6.1

EXTINGUISHING MEDIA	Use carbon dioxide or dry chemical for small fires. Use foam (alcohol, polymer, or ordinary) for large fires.
SPECIAL FIRE FIGHTING PROCEDURES	Self-contained breathing apparatus should be available to firemen.
UNUSUAL FIRE AND EXPLOSION HAZARDS	None

EMERGENCY PHONE NUMBER

304/744-3487

This number is available days, nights, weekends, and holidays.

While Union Carbide Corporation believes that the data contained herein are factual and the opinions expressed are those of qualified experts regarding the results of the tests conducted, the data are not to be taken as a warranty or representation for which Union Carbide Corporation assumes legal responsibility. They are offered for consideration, investigation and verification. Any use of these data and information must be determined by the user to be in accordance with applicable Federal, State, and local laws and regulations.

IV. HEALTH HAZARD DATA

THRESHOLD LIMIT VALUE	100 ppm. -- not to be exceeded. Value from ACGIH (1976)
EFFECTS OF OVEREXPOSURE	Vapors cause irritation of eyes, nose, and throat. Headache, nausea, and vomiting may occur. Eyes are irritated by the liquid.
EMERGENCY AND FIRST AID PROCEDURES	Remove to fresh air and call a physician. In case of contact, flush skin or eyes with plenty of water for at least 15 minutes. Call a physician for eyes.

V. REACTIVITY DATA

STABILITY			
UNSTABLE	STABLE	CONDITIONS TO AVOID	Avoid heat and open flame.
--	√		
INCOMPATIBILITY (materials to avoid)		Avoid contamination with oxygen, strong acids, chlorine.	
HAZARDOUS DECOMPOSITION PRODUCTS		Burning can produce carbon monoxide and/or carbon dioxide.	
HAZARDOUS POLYMERIZATION			
May Occur	Will not Occur	CONDITIONS TO AVOID	Avoid contamination with peroxides, strong mineral acids, metal halides, and similar polymerization catalysts. Para-tertiary butyl catechol is used as inhibitor; maintain its concentration at 10-20 ppm.
√	--		

VI. SPILL OR LEAK PROCEDURES

STEPS TO BE TAKEN IF MATERIAL IS RELEASED OR SPILLED	Wear suitable protective equipment. Collect for disposal. Toxic to fish; avoid discharge to natural waters. See Section VIII.
WASTE DISPOSAL METHOD	Incinerate in a furnace where permitted under appropriate Federal, State, and local regulations. Absorb on paper, evaporate on glass dish, then burn paper.

VII. SPECIAL PROTECTION INFORMATION

RESPIRATORY PROTECTION (specify type)		Air-supplied mask in confined areas		
VENTILATION	LOCAL EXHAUST	May be needed	SPECIAL	—
	MECHANICAL (general)	✓	OTHER	—
PROTECTIVE GLOVES		Rubber	EYE PROTECTION	Monogoggles
OTHER PROTECTIVE EQUIPMENT		Eye bath and safety shower		

VIII. SPECIAL PRECAUTIONS

alpha-METHYLSTYRENE

PRECAUTIONARY LABELING

DANGER! CAUSES BURNS
COMBUSTIBLE

Do not get in eyes, on skin, on clothing.
Keep away from heat and open flame.
Avoid breathing vapor.
Keep container closed.
Use with adequate ventilation.
Wash thoroughly after handling.

FIRST AID: In case of contact, immediately flush eyes or skin with plenty of water for at least 15 minutes while removing contaminated clothing and shoes. Call a physician. Wash clothing before reuse.

FOR INDUSTRY USE ONLY

OTHER HANDLING AND STORAGE CONDITIONS

Store under a nitrogen atmosphere; forms acetophenone, aldehydes, and peroxides if stored under air. Dangerous concentrations of peroxides are not expected to form in normal storage and handling, but storage under a nitrogen atmosphere is recommended.

This chemical floats on water, is resistant to rapid biodegradation, and is highly toxic to aquatic life. Spills should not be flushed to sewers or waterways. The preferred method of disposal is to dilute with a non-reactive solvent or fuel stream and incinerate.

Ground areas can be covered with sand or sawdust after most of the spilled material has been removed. Absorbing materials, after use on small spills, should be disposed of in an approved chemical landfill or by burning.

CAUTION: Do not use clays, micas, or acidic materials which might catalyze polymerization, as absorbents. Personnel engaged in disposal work should avoid contact of wastes by wearing proper protective clothing.

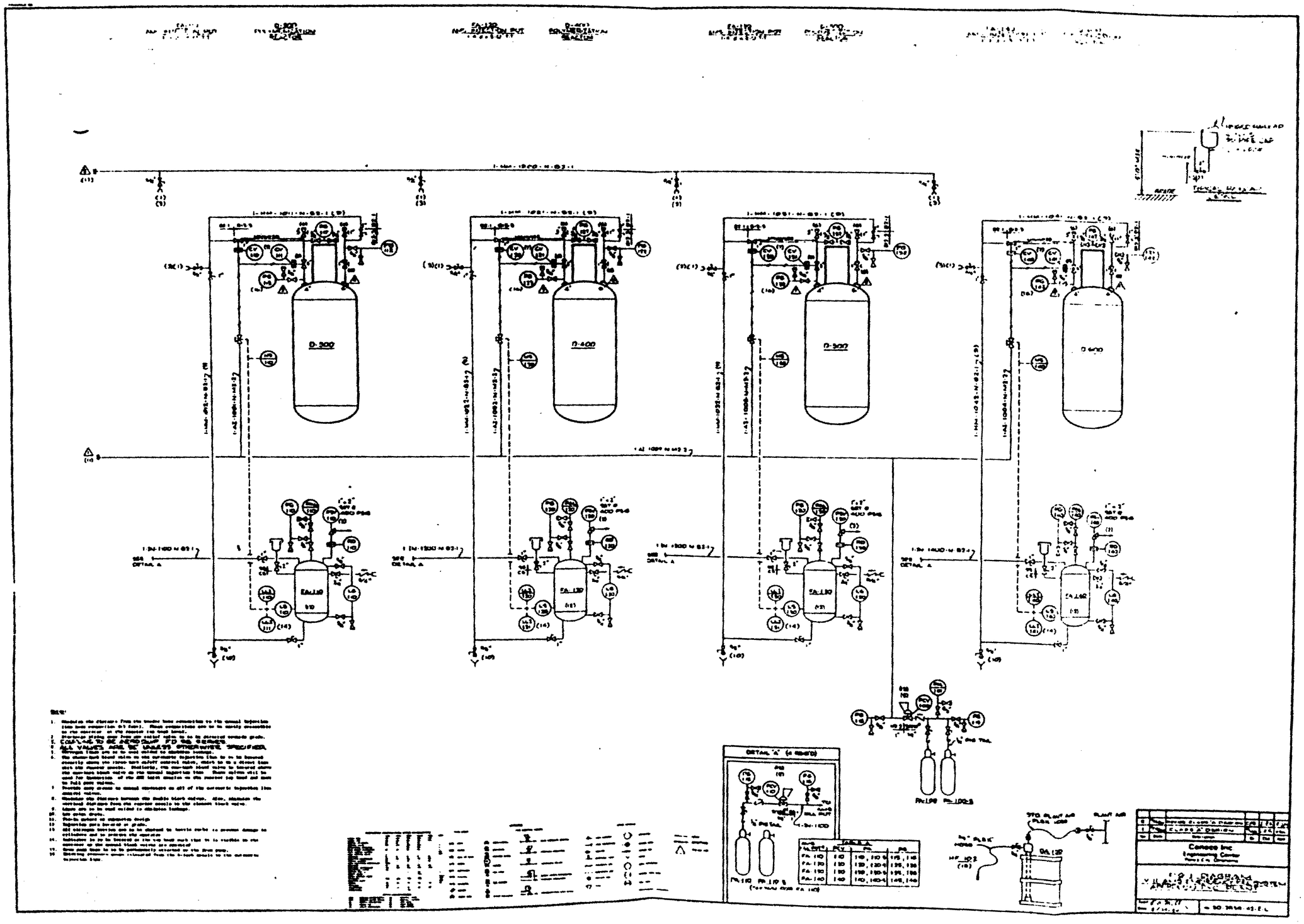

VAB.0001132728

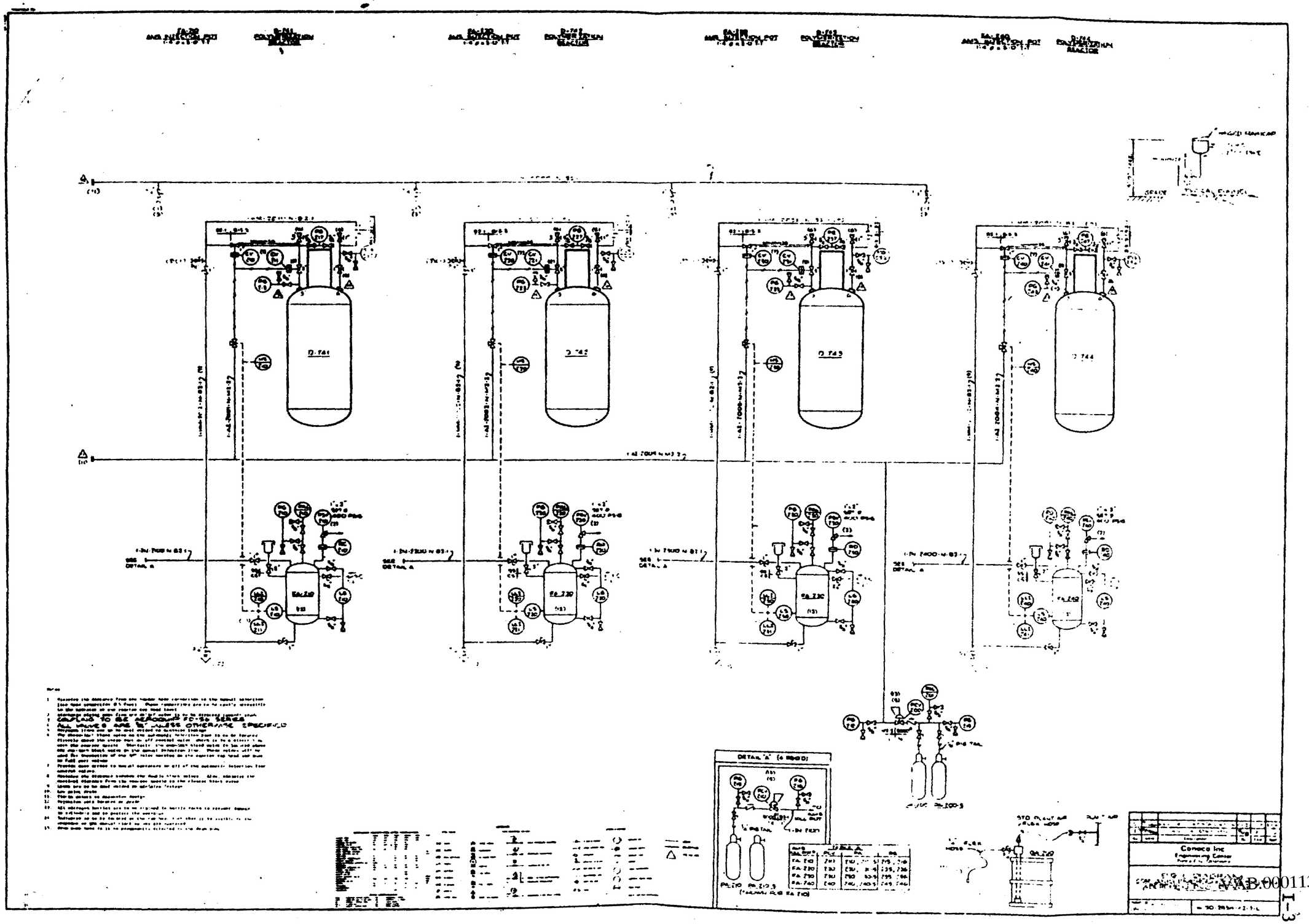
DETAIL "A" (4 REQD)
Conoco Inc
Engineering Center

VAB.00011327 30

REACTOR SECTION 45-742

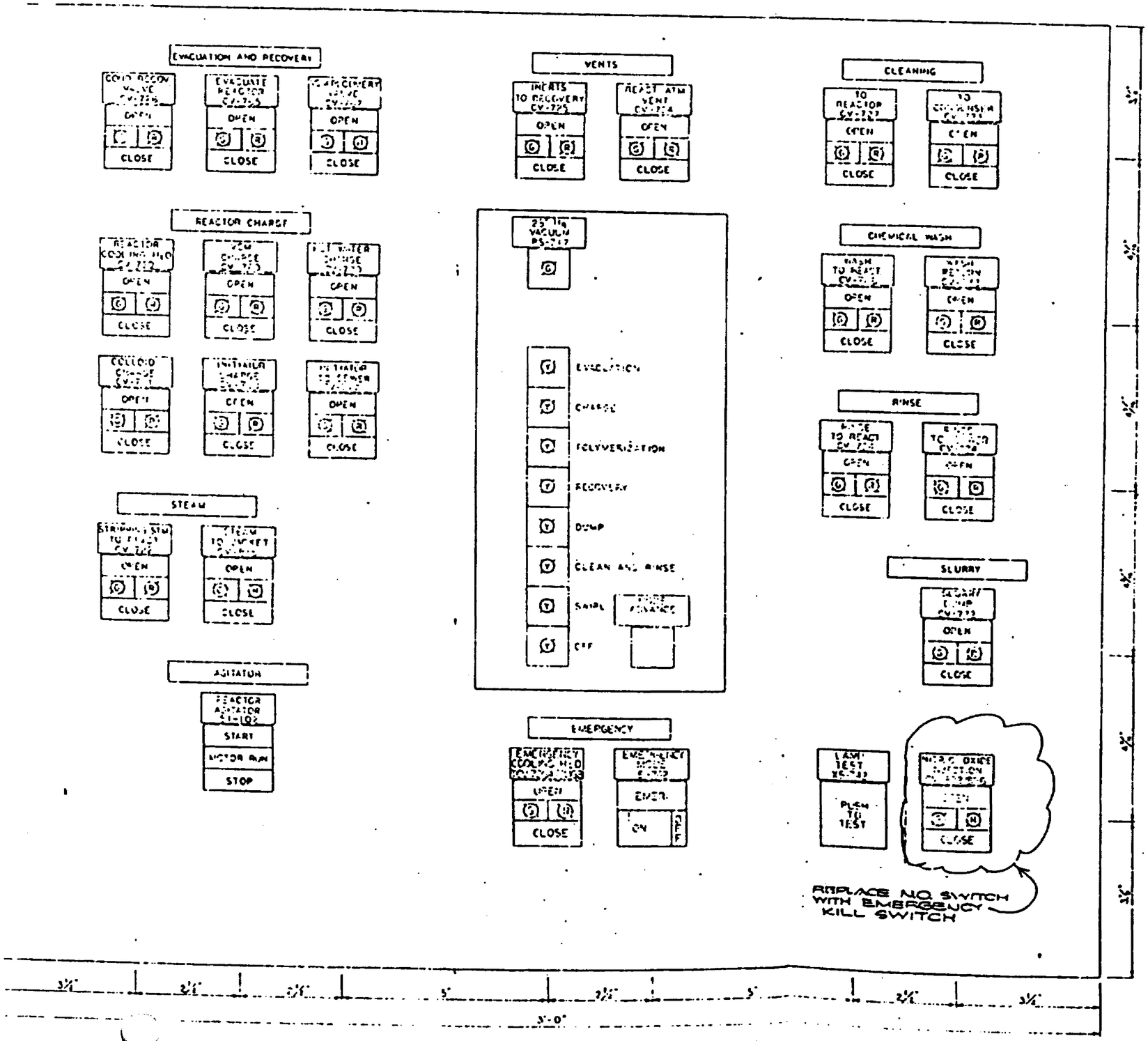

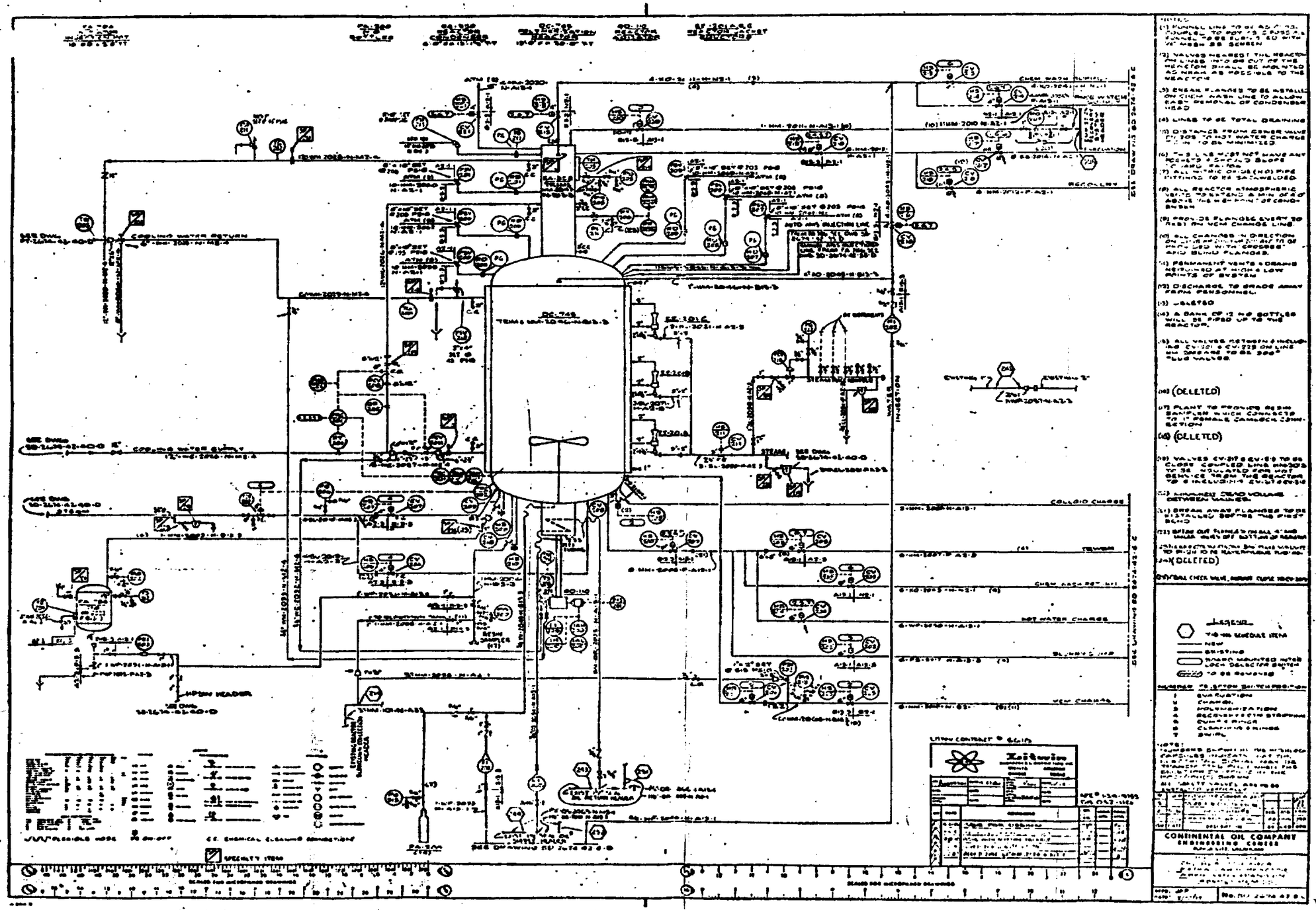

VAB.0001132731

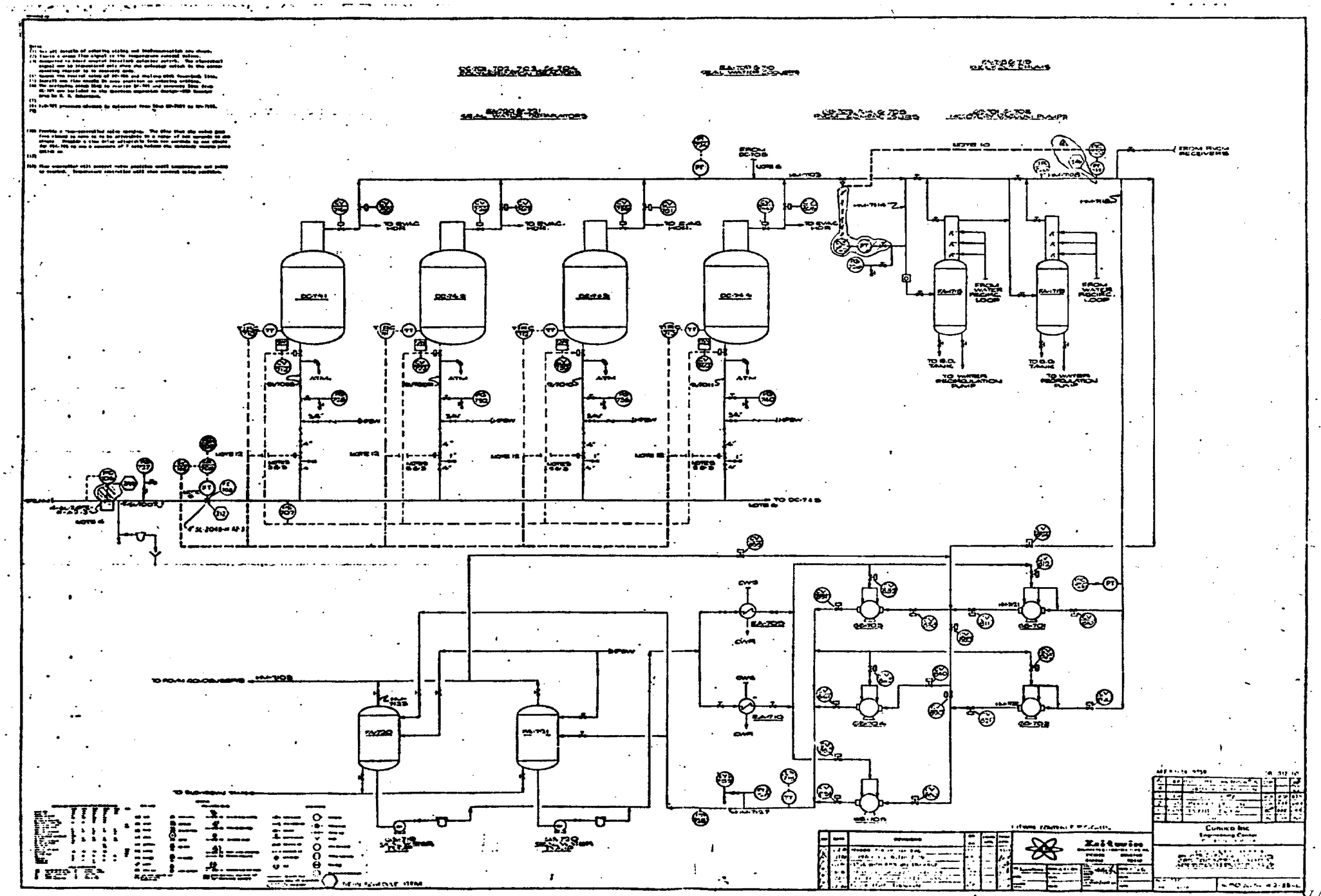

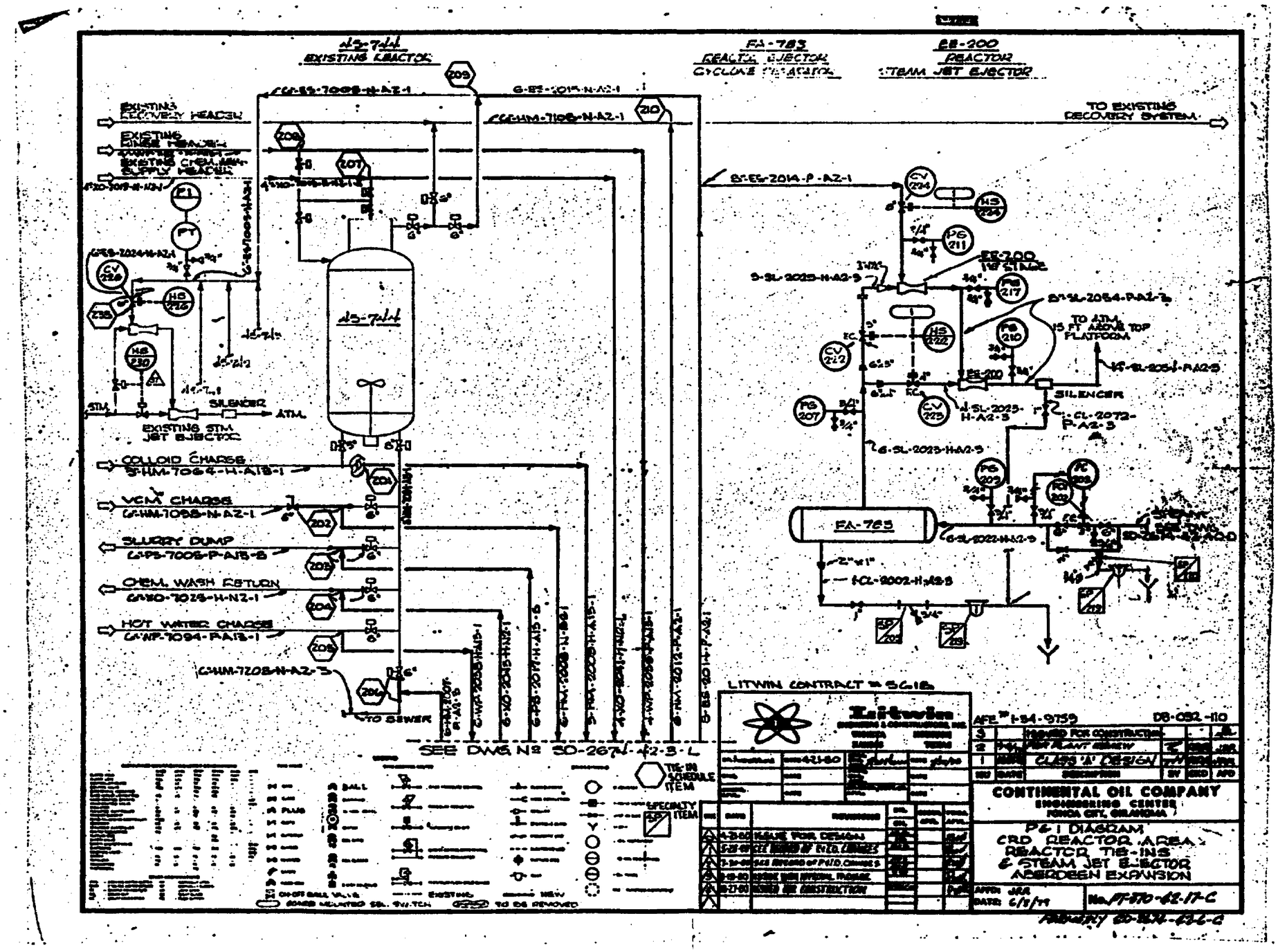
EXISTING REACTOR
FA-783
REACTOR EJECTOR
CYCLONE SEPARATOR
EE-200
REACTOR
STEAM JET EJECTOR
EXISTING RECOVERY HEADER
EXISTING LINER HEADER
EXISTING CHEM. WASH SUPPLY HEADER
TO EXISTING RECOVERY SYSTEM
EE-200 1½" SINGE
TO ATM. 15 FT ABOVE TOP PLATFORM
SILENCER
ATM.
EXISTING STM JET EJECTOR
COLLOID CHARGE
VCM CHARGE
SLURRY DUMP
CHEM. WASH RETURN
HOT WATER CHARGE
TO SEWER
SEE DWG Nº 50-267-42-3-L
LITWIN CONTRACT Nº 5G18
Litwin
AFE Nº 1-34-9759
DB-052-110
ISSUED FOR CONSTRUCTION
CLASS 'A' DESIGN
CONTINENTAL OIL COMPANY
ENGINEERING CENTER
PONCA CITY, OKLAHOMA
P & I DIAGRAM
CRD REACTOR AREA
REACTOR TIE-INS
& STEAM JET EJECTOR
ABERDEEN EXPANSION
APPR. JRA
DATE 6/1/79
No. 17-570-42-17-C

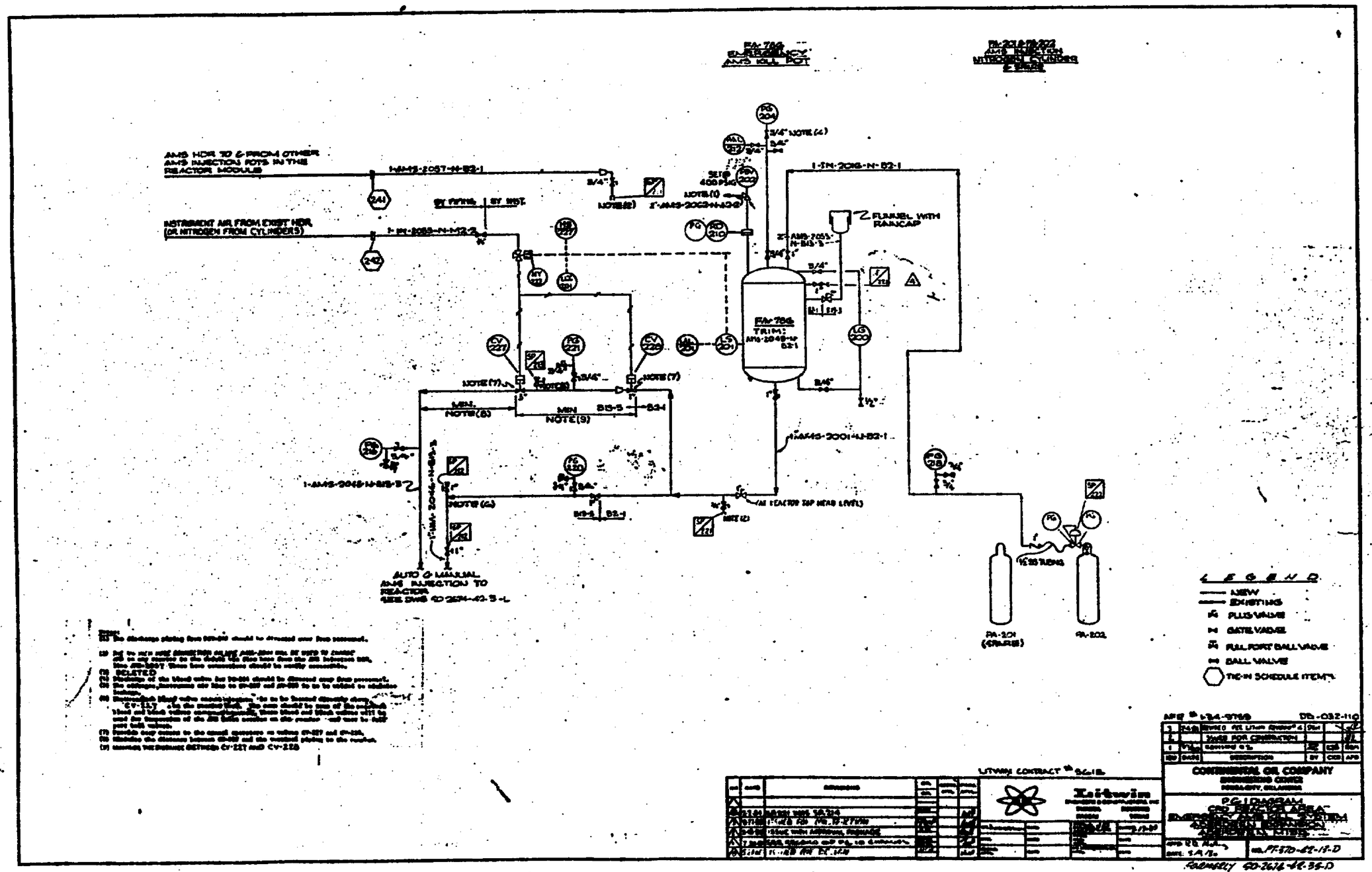
AMS HDR TO & FROM OTHER AMS INJECTION POTS IN THE REACTOR MODULE
INSTRUMENT AIR FROM EXIST HDR (OR NITROGEN FROM CYLINDERS)
FUNNEL WITH RAINCAP
MIN. NOTE(8)
MIN NOTE(9)
(AT REACTOR TOP HEAD LEVEL)
AUTO & MANUAL AMS INJECTION TO REACTOR
PA-201 (ON-LINE)
PA-202
LEGEND
NEW
EXISTING
PLUG VALVE
GATE VALVE
FULL PORT BALL VALVE
BALL VALVE
TIE-IN SCHEDULE ITEMS
CONTINENTAL OIL COMPANY
Leitwein

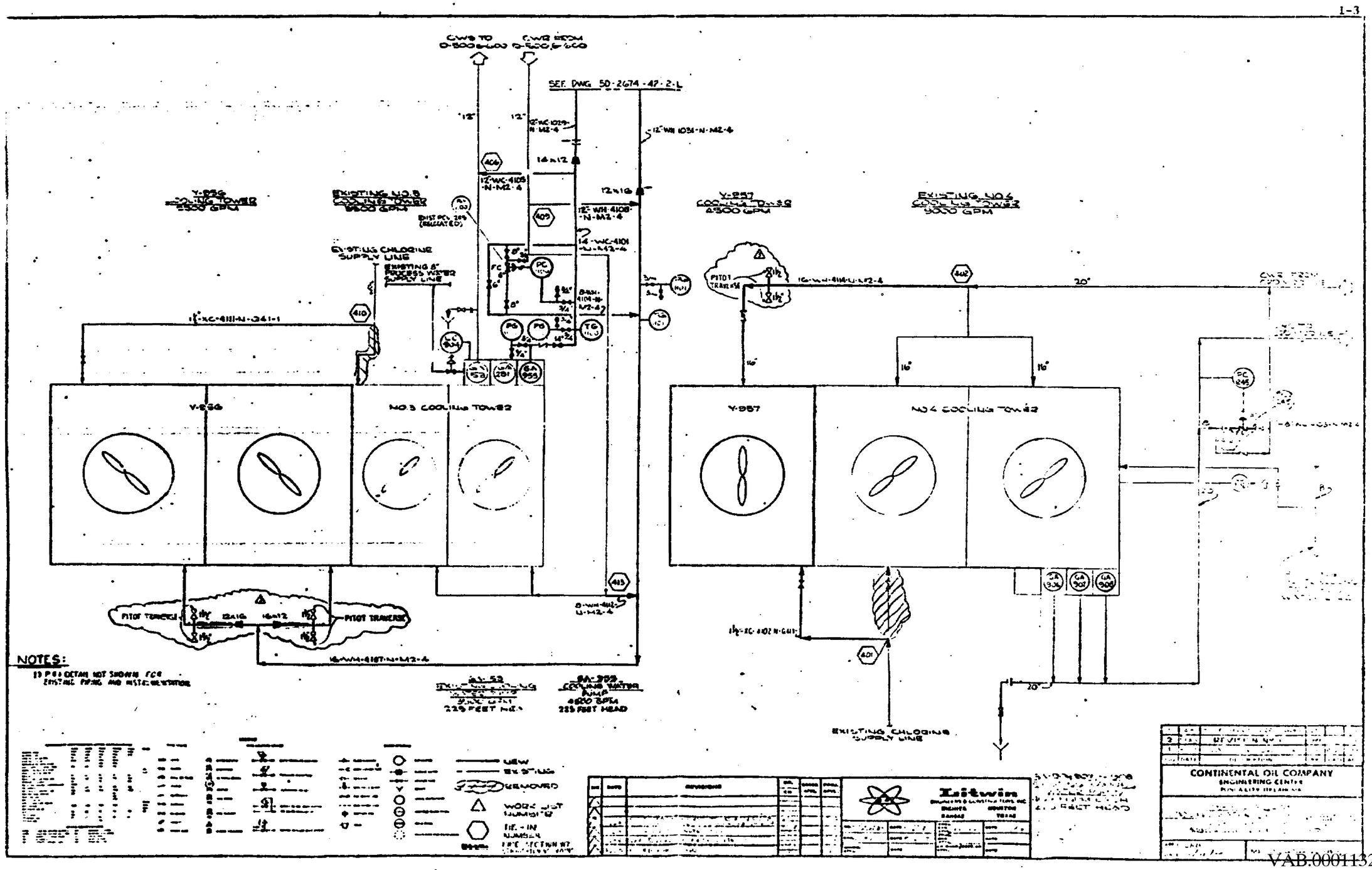

VAB.0001132735

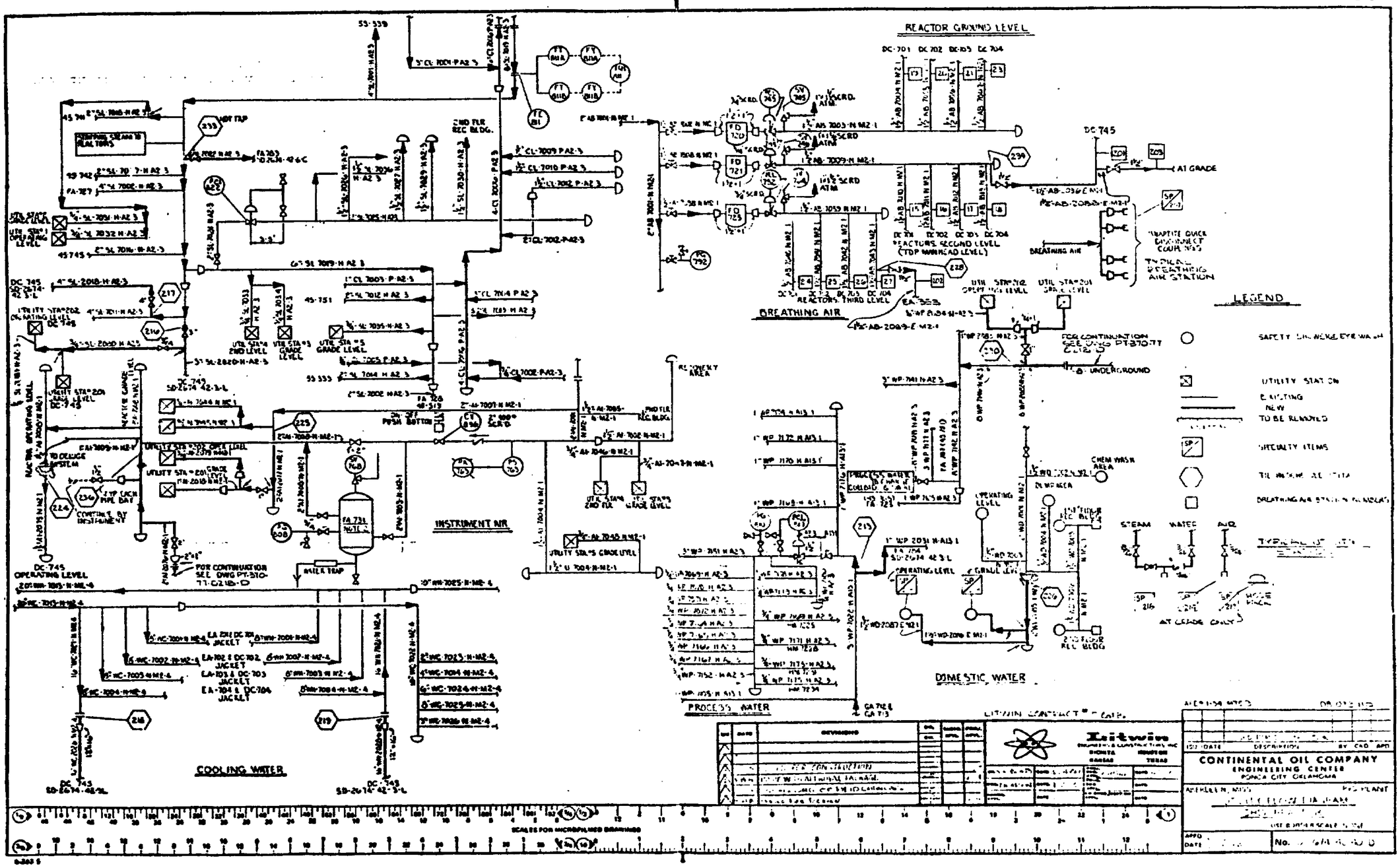
REACTOR GROUND LEVEL
BREATHING AIR
INSTRUMENT AIR
COOLING WATER
PROCESS WATER
DOMESTIC WATER
LEGEND
TYPICAL BREATHING AIR STATION
FOR CONTINUATION SEE DWG PT-370-77
FOR CONTINUATION SEE DWG PT-370-77
CONTINENTAL OIL COMPANY
ENGINEERING CENTER
PONCA CITY OKLAHOMA
Litwin

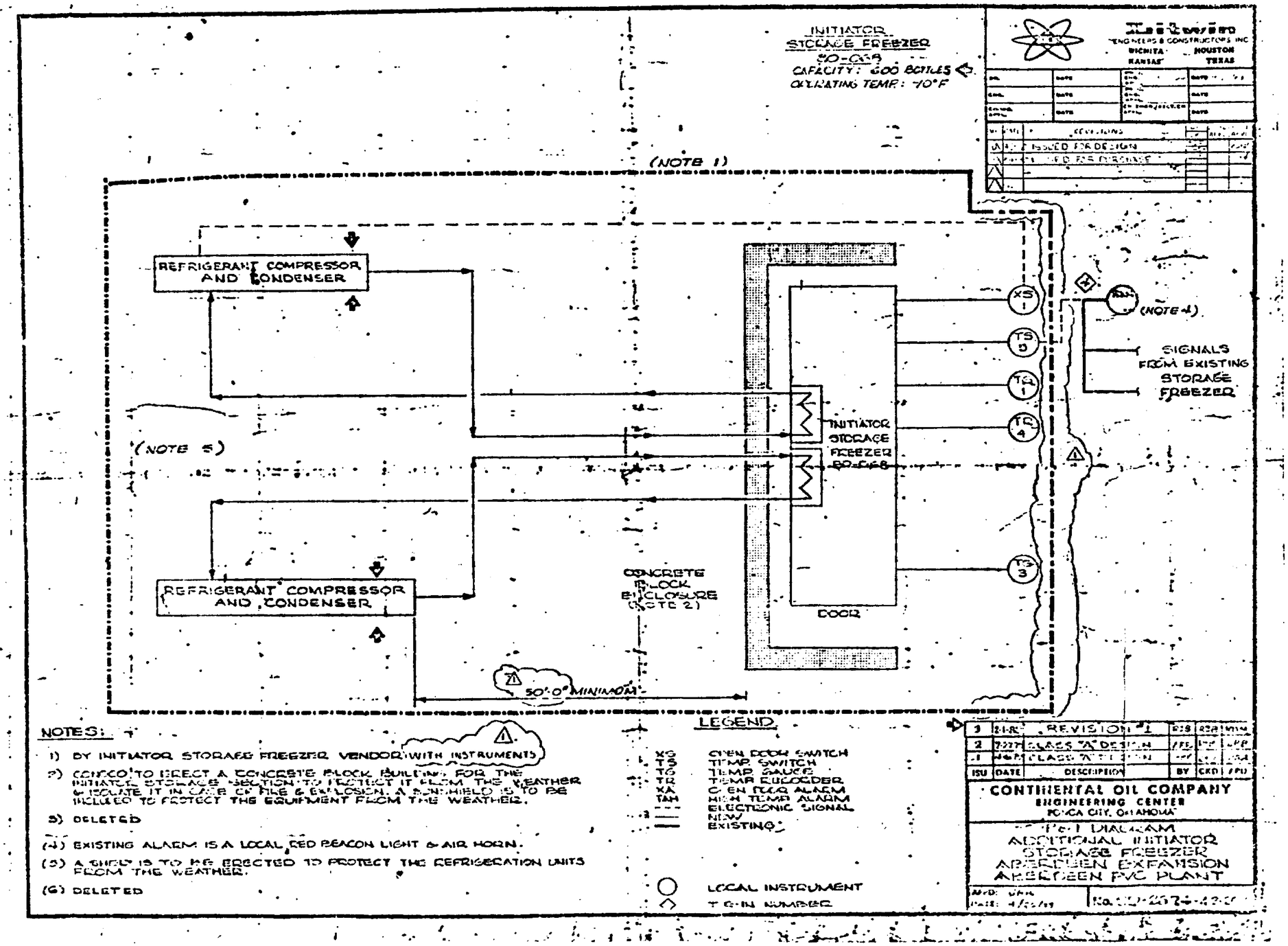
INITIATOR
STORAGE FREEZER
SO-C-C-9
CAPACITY: 600 BOTTLES
OPERATING TEMP.: -10°F
(NOTE 1)
REFRIGERANT COMPRESSOR AND CONDENSER
REFRIGERANT COMPRESSOR AND CONDENSER
(NOTE 5)
XS 1
TS 5
TG 1
TR 4
TG 3
(NOTE 4)
SIGNALS FROM EXISTING STORAGE FREEZER
INITIATOR STORAGE FREEZER
CONCRETE BLOCK ENCLOSURE (NOTE 2)
DOOR
50'-0" MINIMUM
NOTES:
1) BY INITIATOR STORAGE FREEZER VENDOR WITH INSTRUMENTS
2) CONCO TO ERECT A CONCRETE BLOCK BUILDING FOR THE INITIATOR STORAGE SECTION TO PROTECT IT FROM THE WEATHER & ISOLATE IT IN CASE OF FIRE & EXPLOSION. A SUNSHIELD IS TO BE INCLUDED TO PROTECT THE EQUIPMENT FROM THE WEATHER.
3) DELETED
(4) EXISTING ALARM IS A LOCAL RED BEACON LIGHT & AIR HORN.
(5) A SHED IS TO BE ERECTED TO PROTECT THE REFRIGERATION UNITS FROM THE WEATHER.
(6) DELETED
LEGEND
XS OPEN DOOR SWITCH
TS TEMP. SWITCH
TG TEMP. GAUGE
TR TEMP. RECORDER
XA OPEN DOOR ALARM
TAH HIGH TEMP. ALARM
ELECTRONIC SIGNAL
NEW
EXISTING
LOCAL INSTRUMENT
TAG-IN NUMBER
REVISION #1
CLASS "A" DESIGN
CLASS "A" DESIGN
ISSUED FOR DESIGN
CONTINENTAL OIL COMPANY
ENGINEERING CENTER
PONCA CITY, OKLAHOMA
FLOW DIAGRAM
ADDITIONAL INITIATOR
STORAGE FREEZER
ABERDEEN EXPANSION
ABERDEEN PVC PLANT

APPENDIX A

1-4 - 1-15

conoco

CONTINENTAL OIL COMPANY
CONOCO CHEMICALS
Aberdeen, Mississippi

MANUFACTURING PROCEDURE

Department: Vinyl Process Title: Large Reactor Operations

Procedure Section Title: Inerts Venting System

Issue Number: 1 Issue Date: 8-1-76

Reason For Issue: Original

Originated By: Gil Morgan

This procedure describes the operation of the refrigeration system which supplies the coolant to the two knock-back condensors on the north and south recovery receivers. It does not include the process involved in collecting the inerts in the recovery receivers. Included is a system description, operating parameters, trouble shooting and corrective measures and operating log to be completed by the shift supervisor and turned in weekly to the vinyl supervisor.

APPROVALS:

Department Operations Supervisor: _____ Date _____

Department Operations Superintendent: _____ Date _____

Plant Superintendent: _____ Date _____

GAM/lpb
1/27/75

INERTS VENTING SYSTEM

OPERATING PROCEDURES

SYSTEM DESCRIPTION:

The Inerts Venting System is designed to provide a refrigeration capacity of 100,000 BTU/Hr. at -10°F to two knock-back condensors located on top of the north and south recovery receivers. The purpose of the system is to facilitate removal of inert materials accumulated during reaction and recovery.

The coolant for the system is Freon 12. This refrigerant enters the suction of the Frick compressor as a gas where it is compressed to approximately 125 psig. It moves then to the discharge line oil separator which scrubs the oil picked up by the gas at the compressor and returns it to the compressor crankcase. The oil separator is equipped with a 250 watt heater to prevent any accumulation of condensed freon.

From the oil separator the gas enters the condensor or, depending on the inert load, may be diverted into the hot-gas by-pass circuit. If it enters the condensor it is cooled and liquified by the cooling water flowing around the tubes of the condensor. The amount of cooling water is regulated by the discharge pressure.

The liquified gas then falls into the receiver at approximately 105°F and 125 psig. From the receiver it passes thru a filter-drier which removes any foreign matter and entrained moisture. At the discharge of the filter-drier is a small sight-glass which indicates the Freon 12 level and moisture entrainment.

The liquid then passes thru the small heat exchanger where it is sub-cooled by gas returning from the knock-back condensors. The coolant then passes thru the selected solenoid valve (or both solenoid valves if both receivers are in service) to the inlet of the float valve which meters it into the knock-back condensor maintaining a constant level. A smaller float switch is located near the head of the condensor to detect an abnormally high level which will stop the compressor and shut the solenoid valves.

As the coolant absorbs the heat from the VCM vapors and inerts in the condensor tubes, it is vaporized and exits thru the return line. It then passes thru the return trap which removes any entrained liquid. The return trap also receives Freon 12 and oil which is removed from the condensor by the skimmers. The return traps are also equipped with heaters which vaporize any refrigerant. The oil which returns to the trap must be drained periodically by the utility mechanic in his daily unit check. The bulls eye on the side of the trap indicates the oil level.

The gas then passes thru the heat exchangers where it is heated by the warm liquid and moves back into the compressor inlet and starts the cycle over again.

OPERATING INSTRUCTIONS:

Following a lengthy shutdown, the following items must be checked:

1. Suction Trap

   Open Outlet Valves

2. Compressor

   a. Open Discharge Valve
   b. Check Oil Level - Site Glass should be 1/2 full
   c. Open Inlet Valve 2-3 Turns

3. Condensor

   a. Open Outlet Valve
   b. Open Cooling Water Valve
   c. Close Cooling Water By-Pass (in freezing weather leave this valve cracked open at all times)

4. Receiver

   a. Open valves before and after filter-dryer

5. Knock-Back Condensors

   a. Open Liquid Valves in Liquid Supply Line
   b. Close By-Pass Valve
   c. Open Valves to Float Switches (2)
   d. Open Float Switch Equalizing Valves (2)
   e. Liquid Valve Between Float Switch and Condensor - Open
   f. Open (2) Oil Drain Valves on each Condensor

6. Oil Drain Pot a. Close Oil Drain Valves

7. Turn "north" switch to on position
   Turn "south" switch to on position
   (Depending on recovery receiver being used)
   This switch opens:

   a. Liquid Line Solenoid
   b. Hot Gas Solenoid
   c. Oil Drain Solenoid activated for use

8. Check Condensor for cooling water flow.

9. Turn Hand-Off-Auto switch to Auto. If all controls are ok, system will start.

OPERATING INSTRUCTIONS - Continued

10. Immediately open suction valve while watching pressure. Suction pressure should be between 0-25 psig and discharge pressure should not exceed 160 psig.

11. After system has warmed up for about 3-5 minutes, open the oil drain line from the separator to the compressor crankcase.

12. The system should now control automatically.

Safety Controls

1. High-level cut-out float switch located at top of condensor will shut down when liquid level gets too high.

2. High pressure cut-out will shut unit down when compressor discharge pressure gets too high. 175 psig is the cut-out point.

3. Low suction pressure cut-out will shut unit down when suction pressure gets too low. 5 psig is the low pressure cut-out point.

4. Oil pressure cut-out will shut unit down when oil pressure gets too low. 20 psig is the low oil pressure cut-out point.

Trouble Shooting

1. Moisture in System - Element in liquid line sight glass at discharge side of filter-dryer turns yellow. Element will stay green when no moisture is present.

   Corrective Action: Have Maintenance change out filter element.

2. Low Coolant (Freon 12)

   a. Bubbles can be seen in sight glass at discharge of filter-dryer
   b. Compressor will run continuously
   c. Suction pressure will be low

   Corrective Action: Have Maintenance check freon level and recharge as necessary.

3. Filter Dryer Outlet icing over - filter is plugged and must be replaced.

   Corrective Action: Have Maintenance change out filter element.

4. Low Oil Level

   a. Return line from separator plugged.

Trouble Shooting - Continued

5. High Discharge Pressure

   a. Insufficient cooling water supply
   b. Coolant overcharge
   c. Air in system
   d. Condensor tubes fouled

   Corrective Action:
   a. Check water supply line for closed valve
   b. Have Maintenance check freon level
   c. Have Maintenance bleed off inerts
   d. Have Maintenance check condensor

6. Constant Cycling

   a. Not enough load - hot gas by-pass valves open
   b. Insufficient water supply
   c. Air in system

   Corrective Action:
   a. Shut unit down between recoveries
   b. Check cooling water supply
   c. Have Maintenance bleed inerts and check freon level

General

1. The refrigeration system is normally functioning properly when the float valves at the knock-back condenser liquid inlet are iced over.

2. To determine the true compressor oil pressure subtract the return pressure from the oil pressure.

3. The following table shows Freon 12 pressure at corresponding temperatures

4. Do not run the unit if the compressor overheats and kicks out until Maintenance has completely checked out the system.

Temperature Fahrenheit	Freon 12 Pressure
102°	121 PSIG
104°	125 PSIG
105°	127 PSIG
106°	128 PSIG
108°	132 PSIG
110°	136 PSIG
112°	140 PSIG
114°	144 PSIG
116°	149 PSIG
118°	153 PSIG
120°	157 PSIG
122°	162 PSIG
124°	167 PSIG

VAB.0001132744

Note: Attached is the suggested operating log.

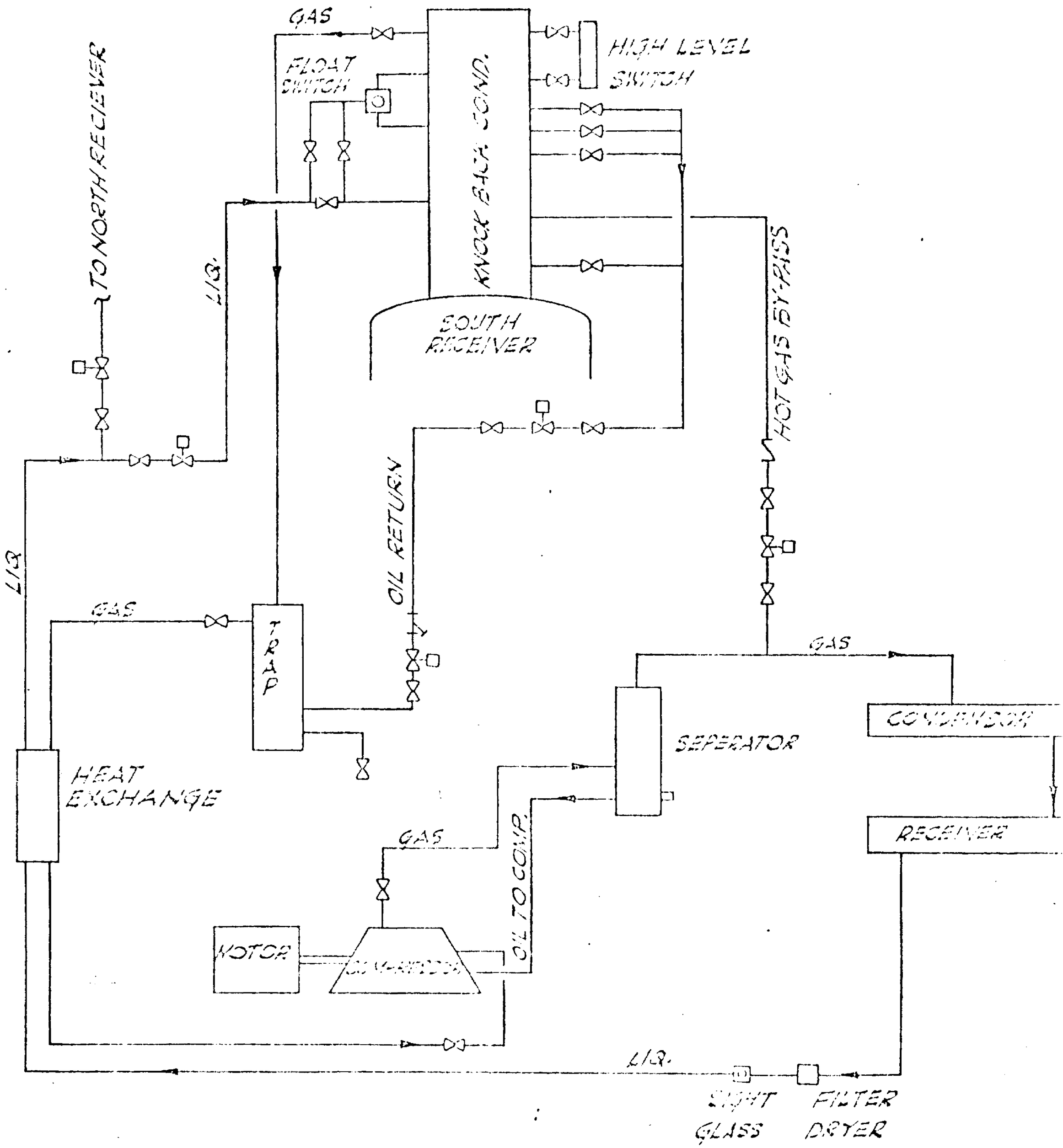

INERTS REMOVAL UNIT WITH ONE CONDENSOR SHOWN

INERTS REMOVAL — OPERATING LOG — STARTING — INIT.

		Mon.	Tues.	Wed.	Thur.	Fri.	Sat.	Sun.	
	Normal 105 - 155°								
00	Compressor Discharge Temp.								
00									
00									
	Normal 100-125 PSIG								
00	Compressor Discharge Press								
00	5 PSIG-Low Cut-Off								
00	175 PSIG Hi Cut-Off								
	Normal 45 PSIG ± 5 PSIG								
00	Compressor Oil Pressure								
00									
00									
	Normal 1/2 Site Glass								
00	Crankcase Oil Level								
00									
00									
	Unit Shut-Down/Reason								
00									
00									
00									
	Normal 100° ± 10°								
00	Condensor Water Temperature								
00	(Out)								
00									
	Normal 40 - 60 PSIG								
00	Recovered VCM Receiver								
00	Pressure								
00									

VAB.0001132746

conoco PLS Review

Interoffice Communication

FVU → [illegible] → AHS

To D. E. Michels, Aberdeen, Mississippi

From W. R. Finch, Ponca City, Oklahoma

Date June 21, 1978

Subject Incinerator Training Manual--Aberdeen PVC Plant

Attached are twenty copies of the Training Manual for your incinerator. The following changes have been made based on comments by Trane Thermal:

1. Trane state that normal water flow to the quench tank should be 40 gpm and minimum flow should be 30 gpm. This is to protect the downcomer tube.

2. Change fuel gas high pressure alarm and high pressure shutdown to 4.0 and 5.0 psig, respectively.

3. Trane also state that the radiation pyrometers indicate around 200°F low; and based on field experience, the incinerator temperature control, alarms, and shutdown off the pyrometers should be adjusted downward.

Walter R. Finch RAR

Walter R. Finch
Senior Process Engineer
Chemicals Division
Process Engineering Department

lkm
Enc
CC:
DEM(20)

File P-47.2

CONOCO CHEMICALS

ABERDEEN, MISSISSIPPI

TRAINING MANUAL/INCINERATION SYSTEM

TABLE OF CONTENTS

Page

I. EPA Standard 1

II. Safety Guidelines 2

III. General Description 4

Process Flow Diagram 7

IV. Instrumentation and Process Equipment Description 8

Schematic Diagram 14

V. Operating Procedures

A. General Information 15

B. Local Panel Alarms and Switches 17

C. Control Room Panel Alarms and Switches 19

D. Malfunctions 20

E. Shutdown Mode 24

F. Start-up Procedures 25

G. Venting Operation 30

Training Manual
Incineration System
Aberdeen, Mississippi

Page 1

I. EPA Standard

The Environmental Protection Agency (EPA) promulgated a vinyl chloride emission standard in October of 1976 which covers plants which manufacture ethylene dichloride, vinyl chloride and/or polyvinyl chloride. The EPA decided to regulate vinyl chloride because it had been implicated as a carcinogenic agent. The purpose of the standard was to minimize vinyl chloride emissions. This would have the effect of furthering the protection of the workers' and public's health by decreasing any risks associated with vinyl chloride exposure.

To be in compliance with the standard the plant has to meet the following regulation: "The concentration of vinyl chloride in all exhaust gases discharged to the atmosphere from each... holding container in vinyl chloride service...is not to exceed 10 ppm..." Inerts that collect in the VCM recovered monomer receivers have been manually vented to the atmosphere in the past. This is not permitted in the EPA standard. All of the equipment that is being installed to meet the EPA compliance requirements will eventually route the inerts in the reactor and recovery system to the receivers. The build-up of inerts will be eliminated by venting to the incineration system. The incinerator will reduce the concentration of VCM in the vent stream via combustion to be in compliance with EPA's standard.

II. Safety Guidelines

The operations and maintenance personnel will be responsible in adhering to all of the safety rules that have been previously set in the plant. They shall be familiar with the safe work procedures as outlined in the plant's "Engineering and Work Practice Control Program." Items which are of particular concern for working safely around the incineration system are as follows:

Hydrochloric Acid

One of the byproducts from the combustion of vinyl chloride is hydrogen chloride. The hydrogen chloride is absorbed in the quench water forming hydrochloric acid. Hydrochloric acid and hydrogen chloride are poisonous and very corrosive. Contact with either one causes burns and ulceration of the skin. A safety shower and eyewash basin are provided at the incinerator site. The eyes or skin should be flushed immediately with water for five minutes or more following contact with this acid.

When work is required around the quench chamber or scrubber during venting operations and where there is any possibility of coming in contact with the process streams, full face mask, protective rubber gloves (not cloth or leather) and clothing are required to avoid skin contact. The quench chamber and scrubber water shall be drained to the sewer and then flushed with city water prior to opening the units for maintenance or inspection

Hot Metal Temperature

The shell of the combustion chamber is not insulated. (If it was insulated, excessive high temperatures would be generated at the carbon

II. Safety Guidelines (Continued)

Hot Metal Temperature (Continued)

steel surface.) When the incinerator is operating, the outside surface temperature of the combustion chamber will exceed 300°F. Avoid contacting the combustion chamber with bare skin and clothing.

Explosive Mixtures

Whenever the fuel gas and combustion air control valves are being adjusted for proper firing rates, an oxygen analyzer should be used to determine the quantity of oxygen in the stack gases. To avoid producing explosive gaseous mixtures, there should always be oxygen present in the stack gases. Under all firing conditions the amount of oxygen in the stack gases should range from three to seven percent on a dry gas basis. The unit should never be run during oxygen deficient conditions (that is, no oxygen detected in the stack gases). If this were to happen, the unit should be shutdown and placed in the purge cycle to remove the flammable gases.

III. General Description

The incineration system is designed to reduce the concentration of VCM in the inert vent stream by means of combustion to be in compliance with EPA's standard. The concentration of vinyl chloride in the exhaust gases is not to exceed 10 ppm with less than ten percent oxygen in the stack gases at all design flow conditions. The incinerator is to burn the inert vent stream from the existing recovered monomer receivers.

The major pieces of equipment in the incineration system are the combustion air blower, combustion chamber, quench chamber, and packed scrubber. The destruction of the VCM will occur in the combustion chamber. The quench chamber is used to cool the combustion gases exiting the combustion chamber. The oxidation of VCM produces hydrogen chloride. Approximately ninety percent of the hydrogen chloride formed is absorbed in the quench water spray. The remaining hydrogen chloride is removed in the packed scrubber. The hydrochloric acid solution drains into a sewer line going to the holding ponds. The pH of the No. 1 pond effluent is presently basic because of the caustic in the chem wash solution and plasticizer production. The caustic will neutralize the hydrochloric acid. If there is more hydrochloric acid produced than what was projected for the normal vent rate, the pH of the pond effluent will decrease, yielding an acidic condition. If this occurs, caustic must be added to the No. 1 pond.

III. General Description (Continued)

The incinerator will receive a single plant vapor vent stream, the recovered monomer receiver inert purge. This stream will have been cooled to 20°F to recover the majority of contained VCM. Normal VCM concentration will be less than 40 volume percent, although during upset conditions, the VCM concentration can approach 100 volume percent.

Due to process conditions, the inerts will not be vented continuously but on an as "required" basis. However, the incinerator must remain in a "ready" condition at all times. During periods where no venting is required, the incinerator will maintain a preset firebox temperature to prevent damage to the refractory due to cyclic cooling. The incinerator will operate at an automatic "low-fire" position. The "low-fire" position is the lowest possible firing rate required to maintain a stable flame and keep the incinerator in a "ready" state.

The inert vent stream will be sent to the incinerator on an intermittent basis by activating a manual switch. The vent will be on burner inlet pressure control to prevent excess flow to the incinerator. When the inert vent flow switch is activated, the combustion air control valve will open to a preset "high-fire" position. After the design air flow rate has been established, a control valve will open to start the vent flow to the incinerator.

The incinerator will operate with temperature control of the firebox (combustion chamber). Normally there is insufficient VCM present to maintain firebox temperature and supplemental fuel gas will be added.

III. General Description (Continued)

When there is excessive amounts of VCM and high firebox temperature, steam will be added to decrease the temperature in the combustion chamber. There must be sufficient dead band between the temperature set points for steam or fuel gas additions to minimize system cycling.

Quench water to be used in the quench chamber, X-1, and the packed scrubber, W-1, will be the blowdown from the cooling towers. The expected blowdown rate is 60 gpm which is adequate for the cooling requirements for all of the firing positions. In case of a power outage or low water flow, city water will be used as the emergency source for the quench water.

The process flow diagram shows the process conditions that are expected for the normal vent case.

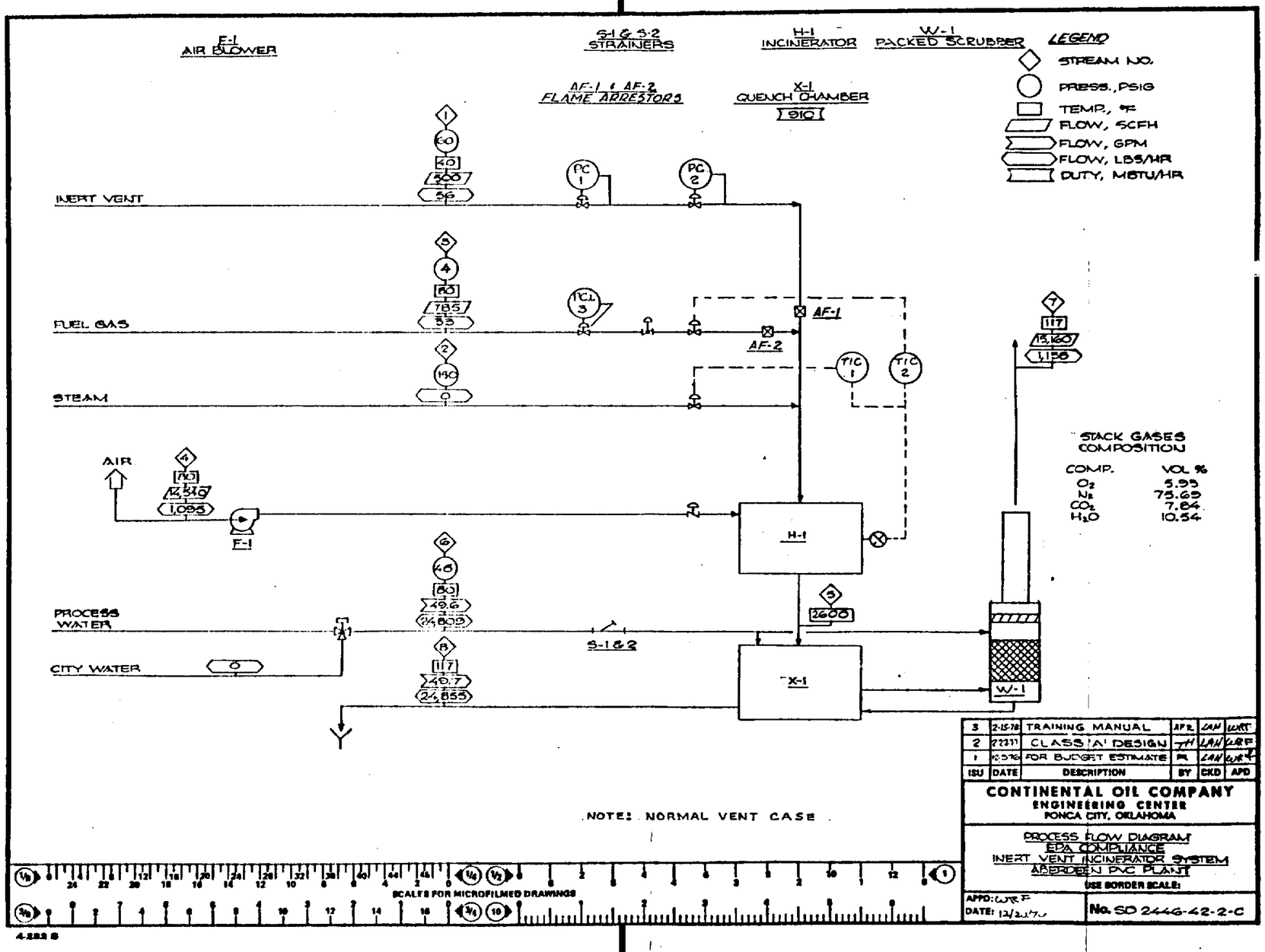
E-1
AIR BLOWER
S-1 & S-2
STRAINERS
H-1
INCINERATOR
W-1
PACKED SCRUBBER
LEGEND
STREAM NO.
PRESS., PSIG
TEMP., °F
FLOW, SCFH
FLOW, GPM
FLOW, LBS/HR
DUTY, MBTU/HR
AF-1 & AF-2
FLAME ARRESTORS
X-1
QUENCH CHAMBER
910
INERT VENT
FUEL GAS
STEAM
AIR
PROCESS WATER
CITY WATER
AF-1
AF-2
PC 1
PC 2
TCL 3
TIC 1
TIC 2
S-1 & 2
H-1
X-1
W-1
F-1
STACK GASES COMPOSITION
COMP. VOL %
O2 5.93
N2 75.69
CO2 7.64
H2O 10.54
NOTE: NORMAL VENT CASE
SCALES FOR MICROFILMED DRAWINGS
CONTINENTAL OIL COMPANY
ENGINEERING CENTER
PONCA CITY, OKLAHOMA
PROCESS FLOW DIAGRAM
EPA COMPLIANCE
INERT VENT INCINERATOR SYSTEM
ABERDEEN PVC PLANT
USE BORDER SCALE:
No. SD 2446-42-2-C

IV. Instrumentation and Process Equipment Description

The major pieces of equipment to be described in detail are the combustion chamber, quench chamber, and packed tower. How the feed streams are controlled and the rationale for the particular instrumentation scheme used will be outlined below.

The combustion chamber shell is built out of carbon steel. The chamber is cylindrical in shape and has an approximate diameter of three and one half feet and is ten feet in length. The combustion chamber is lined with seven and one half inches of firebrick. The firebrick is designed to withstand operating temperature up to 3000°F. If the firebrick is exposed to temperatures in excess of 2800°F for long periods of time, the firebrick will begin to decompose. For this reason the incinerator unit will shutdown if the operating temperature is higher than 2800°F. The shutdown can be initiated automatically by the dual thermocouple or the radiation pyrometers sensing the excessive temperature. During all modes of operation rapid changes in the operating temperature (more than a hundred degree change in several minutes) should be avoided. Any sudden fluctuations in temperature will generate thermal stresses in the firebrick and result in spalling of the firebrick. The combustion chamber's temperature is indicated both in the control room and out in the field on the local control panel. There is a warning alarm that will go off before the high temperature shutdown set point is reached.

IV. Instrumentation and Process Equipment Description (Continued)

The combustion chamber is a holding container for the reactants (oxygen, methane and VCM). The combustion chamber is designed with a minimum residence time of 1.5 seconds. The combustion of VCM is almost an instantaneous reaction at high temperatures though the added residence time is further assurance in allowing the oxygen time to oxidize the VCM to water, carbon dioxide, and hydrogen chloride.

The burner is located on top of the combustion chamber. The combustion air, fuel gas, and the inert vent streams are fired downward into the combustion chamber. The inert vent stream is regulated by two pressure controllers in series. The flow rate is governed by the burner inlet pressure. The normal burner pressure should be around 3 psig. There is a flow indicator in the control room for observing the inert vent flow during venting operations.
When the incinerator is in the "low-fire" position, the two safety shut-off valves are closed and the bleed vent is open to the atmosphere. The double block and bleed arrangement was installed as a safety item to isolate the VCM feed stream from the burner during the "low-fire" or shutdown mode of operation. When the manual "high-fire" switch is activated in the control room, the linked combustion air and fuel gas valves open to their "high-fire" postion and then the bleed closes and the two safety shut-off valves open. There is a control valve that slowly ramps open to initiate flow. The speed at which the valve opens will be slow enough for the fuel gas temperature controller to respond

IV. Instrumentation and Process Equipment Description (Continued)

and thus minimize upsetting the incinerator operation. If the burner inlet pressure for the inert vent exceeds 5 psig, the unit will automatically shutdown.

Oxygen has been detected in the RVCM receivers in the past and during winter a propane/air mixture is used as fuel gas. A flame arrestor has been installed on both the inert vent line and fuel gas line at the burner to prevent a flame front from propagating back in the lines.

The fuel gas flow is regulated by a temperature controller. The controller receives a signal from one of two radiation pyrometers. There is a switch in the control room for selecting which pyrometer to use. The signals from each of the pyrometers are recorded in the control room for detecting any drift or malfunction in the controlling pyrometer. An alarm will indicate when the combustion chamber temperature is too low or high.

Upstream of the temperature control valve are the linked combustion air and fuel gas valves. These valves are linked to provide the approximate fuel gas to air ratio required for the "low-fire" and "high-fire" positions. The temperature controller's fuel gas valve is used to trim the fuel gas flow in maintaining the proper operating temperature. The double block and bleed arrangement is also provided on the pilot and main fuel gas line. If the fuel gas regulator is malfunctioning or burner becomes plugged, the unit will shut down automatically on either low or high fuel gas pressure. There is

IV. Instrumentation and Process Equipment Description (Continued)

a warming alarm before the high fuel gas pressure shutdown setpoint is reached.

The combustion air is supplied by the air blower. If the motor fails or the blower discharge pressure is less than 1 psig, the incinerator will shut down automatically. There will be only two positions for the air control valve, "low-fire" and "high-fire". The "low-fire" is the lowest turndown position achievable for this particular burner. When the incinerator is in "low-fire", the incinerator is idling and there is no inert vent flow. At "high-fire" there is sufficient amount of air to burn 1000 SCFH of VCM. Hence, if all of the inerts were bled from the receiver, the incinerator would be able to handle the inert vent stream even if it were 100 percent VCM. There is a burner selector switch at either the local or control room panel which will activate the linked valves to shift from "low-fire" to "high-fire" or vice versa. However, only the burner selector switch in the control room can activate the on-off control valve in the inert vent line to open.

There are several lines which branch off of the main air supply header. There is a line used for the pilot air and another one which is used to supply the cooling air for the radiation pyrometers' sight tubes. Instrument air is used to keep the lens on the pyrometers clean.

Whenever the temperature in the combustion chamber rises, the fuel gas trim control valve should close. If the fuel gas valve is closed, and the temperature continues to rise, steam will be injected to cool

IV. Instrumentation and Process Equipment Description (Continued)

the flame on temperature control. At no time should the steam valve be open when the trim fuel gas control valve is also open. Flow indication is provided locally at the incinerator for the steam and fuel gas flows.

The combustion gases exit the combustion chamber thru a Hastelloy downcomer tube. The lower end of the tube is submerged in water and is sprayed on the outside of the tube to cool the gases. The downcomer tube is constructed from Hastelloy because it has a better resistance to corrosion attack by hydrogen chloride than other metals. The combustion gases should be cooled to less than 140°F by the time they leave the quench chamber. The quench chamber is constructed from carbon steel and has a Kynar liner. The Kynar lining is resistant to the acidic environment (hydrochloric acid) up to a temperature of 275°F. The spray nozzles are made from PVC and are accessible from the eight inch inspection ports on the quench tank.

The quench water used in the quench tank and packed scrubber is the cooling tower blowdown. The expected blowdown rate is 60 gpm. A globe valve is used as the means of setting the blowdown rate to the incineration system. Strainers are provided at the incinerator site to remove any debris which might clog the spray nozzles. There is a warning alarm indicating low water flow to the scrubber and the unit will shut down if the total water flow is too low. Prior to a shutdown due to low water flow, a three-way valve will switch to city water as a back-up source. If the temperature of the effluent gases from the

IV. Instrumentation and Process Equipment Description (Continued)

quench tank exceeds 180°F, the unit will automatically shut down.

The packed scrubber is made of fiberglass reinforced plastic (FRP). The FRP is good up to 190°F for continuous operating temperatures. The scrubber is packed with one-inch ceramic Intalox saddles. The water flow to the scrubber is adjusted manually with a globe valve. A wash connection is provided to rinse the demister section of the scrubber if it is deemed necessary. There is an equilization line between the scrubber and quench tank to drain the scrubber to the quench tank. An alarm will indicate when the water level is rising in the quench tank.

EPA requires that the stack gases be monitored continuously for VCM emissions. A heater and dryer sampling system is attached to the sample line off the scrubber stack. This sampling system contains a permeation tube which will remove the water vapor from the slip stream when dry instrument air is passed on the outside shell of the tube. If the water was not removed, the sample flow could become restricted due to the condensed water vapor plugging the line. The sample is withdrawn from the stack with the vacuum pump for the fixed point monitor system.

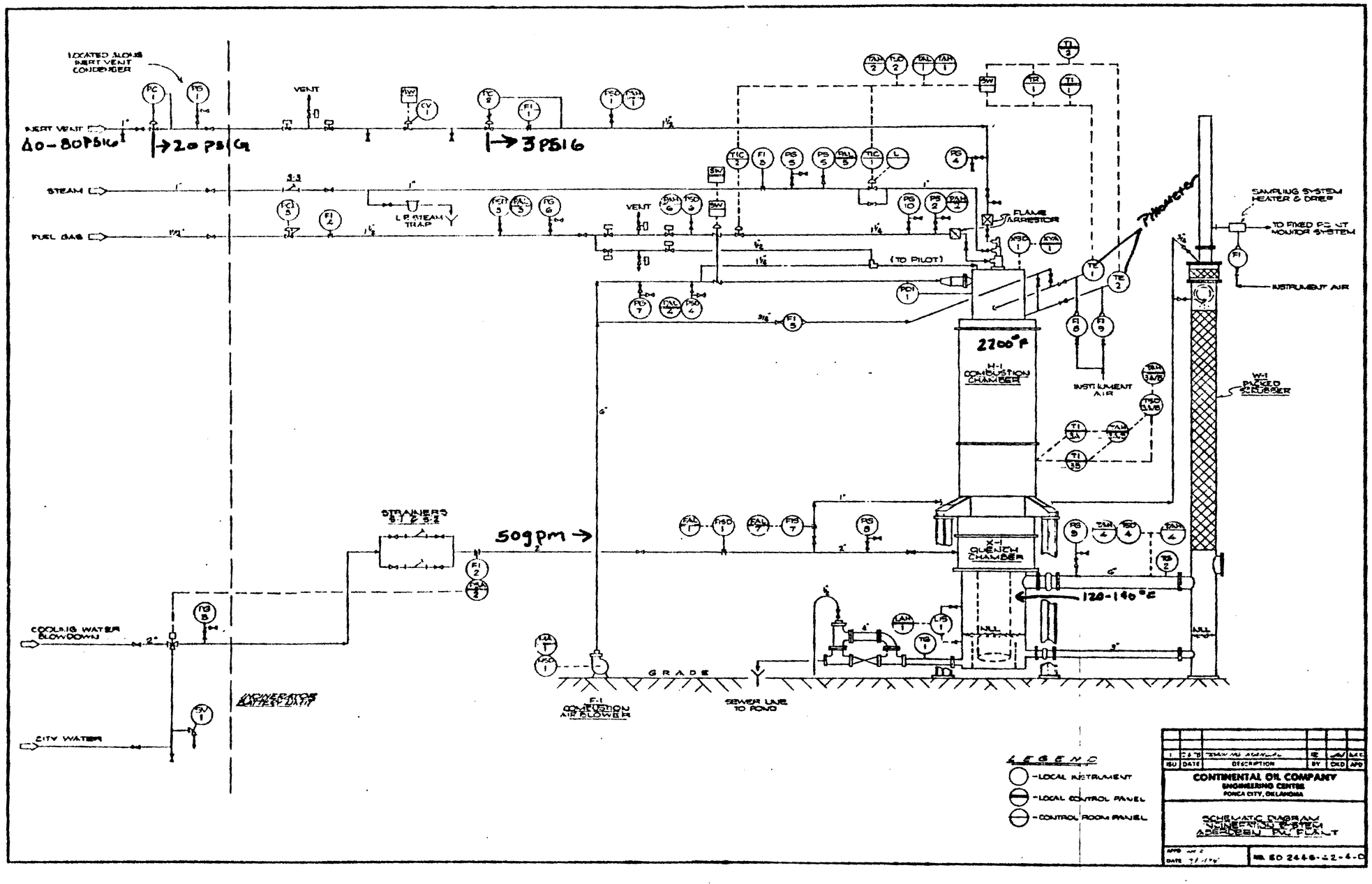
LOCATED ALONG INERT VENT CONDENSER
INERT VENT
40-80 PSIG
20 PSIG
3 PSIG
VENT
STEAM
FUEL GAS
L.P. STEAM TRAP
FLAME ARRESTOR
(TO PILOT)
PYROMETER
SAMPLING SYSTEM HEATER & DRIER
TO FIXED FG MONITOR SYSTEM
INSTRUMENT AIR
2200°F
H-1 COMBUSTION CHAMBER
W-1 PACKED SCRUBBER
STRAINERS
50 gpm
X-1 QUENCH CHAMBER
120-140°F
COOLING WATER BLOWDOWN
CITY WATER
GRADE
SEWER LINE TO POND
F-1 COMBUSTION AIR BLOWER
LEGEND
-LOCAL INSTRUMENT
-LOCAL CONTROL PANEL
-CONTROL ROOM PANEL
CONTINENTAL OIL COMPANY
ENGINEERING CENTER
PONCA CITY, OKLAHOMA
SCHEMATIC DIAGRAM
INJECTION SYSTEM
ABERDEEN PLANT

V. Operating Procedures

A. General Information

The incinerator, H-1, removes VCM from the recovered monomer (RVCM) receivers vent stream via combustion with air. The vinyl chloride emission standard limits the maximum concentration of vinyl chloride in atmospheric vents to 10 ppm. To achieve this low concentration the RVCM receiver vent stream is first cooled to 20°F to recover the majority of contained VCM and is then burned in a high efficiency burner at a high operating temperature (2400°F). Since one of the products of the combustion of vinyl chloride is hydrogen chloride, the combustion gases from the incinerator are scrubbed with water in the quench tank, X-1, and the packed scrubber, W-1. The incinerator's effluent gases are cooled and the hydrogen chloride is absorbed in the water, forming hydrochloric acid.

The major operating parameters of incinerator operation are as follows:

1. The incinerator will operate continuously.
   a. A "high-fire", or vent position is provided when venting the RVCM stream to the incinerator. This provides maximum combustion air flow to the incinerator's combustion chamber to insure that sufficient air is available.
   b. A "low-fire" position is provided when venting is not required. This reduces combustion air flow to the incinerator and thus reduces natural gas usage (energy conservation).

V. Operating Procedures (Continued)

A. General Information (Continued)

2. When the pressure has built up in the RVCM receivers, this is an indication that it may be time to vent the inerts from the receivers. However, the panel operator can use his discretion in determining when the receivers should be vented.

3. The incinerator's combustion chamber will operate at approximately 2400°F at all times via temperature controllers, TIC-1 and TIC-2. When there is insufficient amounts of VCM present to sustain the combustion chamber temperature, supplemental natural gas will be added. When there is excessive VCM present in the vent stream and a high combustion chamber temperature, steam will be added to decrease the temperature. Sudden changes in temperature can damage the combustion chamber firebrick and refractory.

4. The hot combustion gases flow out of the combustion chamber through a Hastelloy tube into the quench chamber. Water sprays on the outside of the Hastelloy tube, thus cooling both tube and combustion gases. This cooling is required to prevent "melting" of the quench chamber liner and the scrubber.

5. Hydrogen chloride is removed from the combustion gases by the quench chamber and scrubber water sprays. This produces a hydrochloric acid solution which overflows from the quench tank into the sewer. Hydrochloric acid can cause severe burns. In case of contact, wash the exposed area thoroughly with water and contact the shift supervisor immediately.

V. Operating Procedures (Continued)

A. General Information (Continued)

6. Special operating procedures must be followed during initial start-up of the incinerator to dry and cure the firebrick (Trane Thermal will assist in training the operators for this phase of operation and outline the proper guidelines to use). This procedure should also be followed if the incinerator has been shutdown for an extended period of time which resulted in the combustion chamber temperature dropping to less than 1000°F. Modified procedures can be used for short shutdowns.

7. Since the incinerator site is remote from any major process area, an outside operator should check the incinerator several times per shift. Attention should be given to flow, pressure, and temperature indications that are provided at the incinerator site.

8. A constant amount of quench/scrubber water is supplied to X-1 and W-1 from the cooling water blowdown. City water will be used as the emergency source for the quench water in case of a power outage or low water flow.

B. Local Panel Alarms and Switches

The panel and outside operators should be familiar with all of the alarms and switches at the local panel and control room panel. Care must be taken to assure that all switches are in their proper positions for safe incinerator operation. The following alarms and switches are located on the local panel at the incinerator:

V. Operating Procedures (Continued)

B. Local Panel Alarms and Switches (Continued)

1. Switches or Pushbuttons

a. Air Blower Start Button

b. Air Blower Stop Button

c. On-Off Switch (On, Off) (Can be used as emergency shutdown switch)

d. Purge Start Pushbutton

e. Burner Start Pushbutton

f. Burner Selector Switch (Low-Fire, High-Fire, Remote)

g. Operation Mode Switch (Warm-Up, Run)

h. Horn Silence Button

i. Annunciator Lamp Test Button

2. Indicating Lights

a. "Air Blower On"

b. "Purging"

c. "Purge Complete"

d. "Pilot On"

e. "Flame On"

3. Malfunction Alarms	Set Point
a. Scrubber Water Low Flow, FSL-7	(3.5 GPM)
b. Quench Tank High Level, LS-1	(10" W.C.)
c. Fuel Gas High Pressure, PSH-2	(4.0 psig)
d. Steam Low Pressure, PSL-5	(60.0 psig)

180°F

ANNUNCIATOR

1 PSIG PSL-4 COMBUSTION AIR LOW PRESSURE SHUTDOWN	PSL-3 FUEL GAS LOW PRESSURE SHUTDOWN	5 PSIG PSH-6 FUEL GAS HIGH PRESSURE SHUTDOWN	XY-1 FLAME FAILURE SHUTDOWN	TISH-3A/B INSTRUMENT FAILURE ALARM / TISH-3A/B REFRACTORY HIGH TEMP SHUTDOWN 2800°F	TSH-4 SCRUBBER HIGH TEMP ALARM / TSH-4 SCRUBBER HIGH-HIGH TEMP SHUTDOWN	60 PSIG PSL-5 STEAM LOW PRESSURE ALARM
LS-1 QUENCH TANK HIGH LEVEL ALARM 32"	PSL-6 TOTAL WATER LOW FLOW SHUTDOWN 30 GPM	AIR BLOWER FAILURE SHUTDOWN	PSH-1 WASTE GAS HIGH PRESSURE ALARM 5 PSIG Shutdown	PSH-2 FUEL GAS HIGH PRESSURE ALARM 4 PSIG	FSL-7 SCRUBBER WATER LOW FLOW ALARM	CITY WATER ON ALARM

COMBUSTION CHAMBER

TI-1 TI-2

REFRACTORY

TISH-3A TISH-3B

BLOWER ON

PURGE COMPLETE

BURNER LOW HIGH REMOTE

FLAME ON

BLOWER START

PURGING

(Pilot) WARM UP RUN

PILOT ON

ANNUNCIATOR TEST LAMP

BLOWER STOP

PURGE START

OFF ON

BURNER START

HORN SILENCE

LEGEND

SELECTOR SWITCH

PUSHBUTTON

LIGHT

ISU	DATE	DESCRIPTION	BY	CKD	APD
1	2-16-78	TRAINING MANUAL	RC	LAH	WRF

CONTINENTAL OIL COMPANY
ENGINEERING CENTER
PONCA CITY, OKLAHOMA

INCINERATION SYSTEM
LOCAL PANEL LAYOUT
ABERDEEN PVC PLANT

USE BORDER SCALE:

APPD: WRF
DATE: 3/9/78

No. 5D 2446-42-6-C

SCALES FOR MICROFILMED DRAWINGS

4-282 B

ing MUST be
W/ Controls in
fire position
3 minutes.

me on light
r operate w/in
sec. After pilot
it, all systems
go. If not
ge MUST be done
:

ot times out after 10 sec of flame on

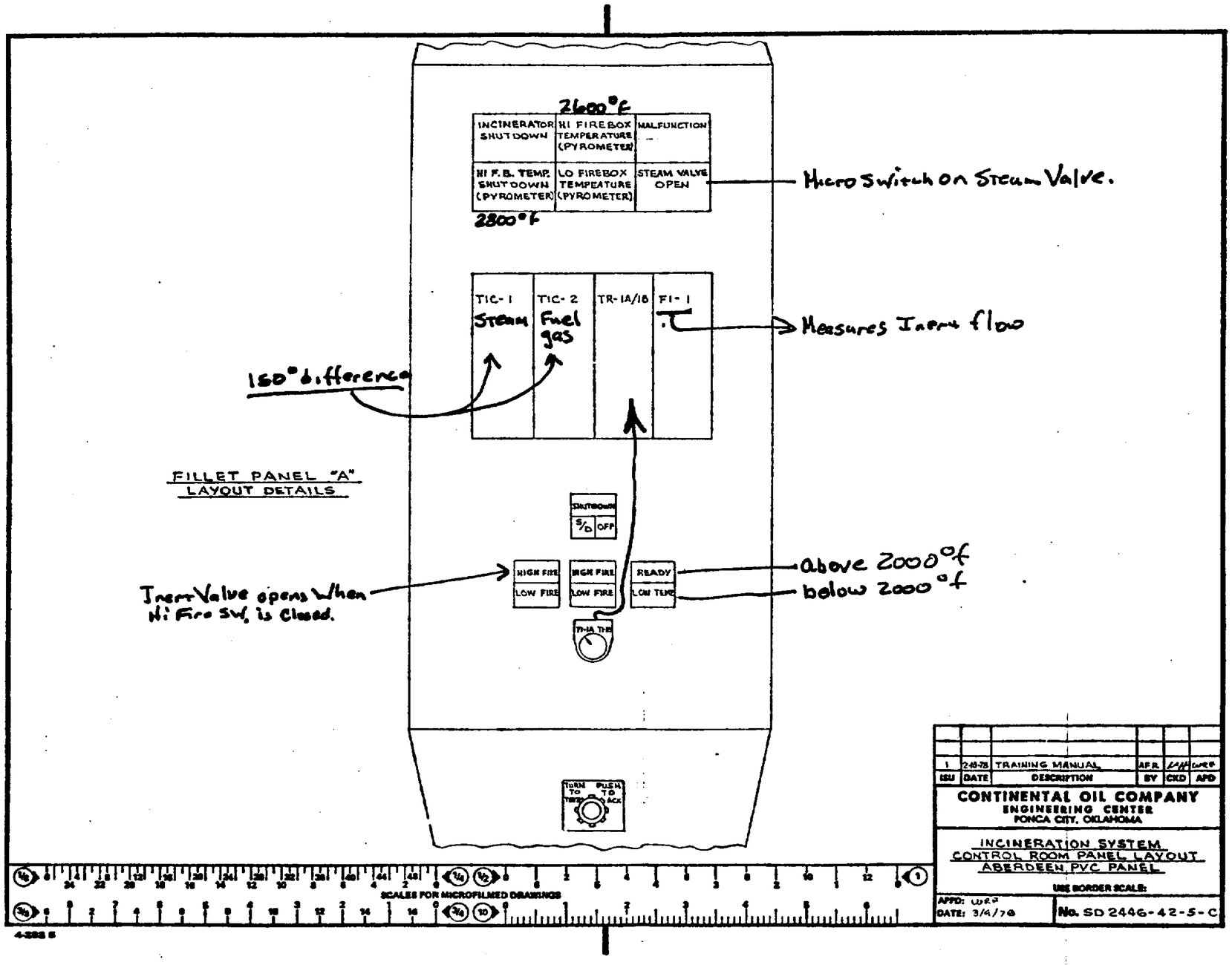
2600°F
INCINERATOR SHUTDOWN
HI FIREBOX TEMPERATURE (PYROMETER)
MALFUNCTION
HI F.B. TEMP. SHUTDOWN (PYROMETER)
LO FIREBOX TEMPERATURE (PYROMETER)
STEAM VALVE OPEN
2800°F
Micro Switch on Steam Valve.
TIC-1 Steam
TIC-2 Fuel gas
TR-1A/1B
FI-1
Measures Inert flow
160° difference
FILLET PANEL "A"
LAYOUT DETAILS
SHUTDOWN
S/D
OFF
HIGH FIRE
LOW FIRE
HIGH FIRE
LOW FIRE
READY
LOW TEMP
Inert Valve opens when Hi Fire SW. is Closed.
above 2000°f
below 2000°f
TURN TO TEST
PUSH TO ACK
1 2-13-78 TRAINING MANUAL AFR
ISU DATE DESCRIPTION BY CKD APD
CONTINENTAL OIL COMPANY
ENGINEERING CENTER
PONCA CITY, OKLAHOMA
INCINERATION SYSTEM
CONTROL ROOM PANEL LAYOUT
ABERDEEN PVC PANEL
USE BORDER SCALE:
APPD: WRP
DATE: 3/4/78
No. SD 2446-42-5-C
SCALES FOR MICROFILMED DRAWINGS

V. Operating Procedures (Continued)

B. Local Panel Alarms and Switches (Continued)

3. Malfunction Alarms (Continued)

	Set Point
e. Refractory Thermocouple Failure, TISH-3A/B	-
f. Scrubber High Temperature, TSH-4	(160°F)
g. Switch to City Water, FSL-2	(35.0 GPM)

4. Shutdown Alarms

	Set Point
a. Waste Gas High Pressure, PSH-1	(5.0 psig)
b. Fuel Gas Low Pressure, PSL-3	(0.3 psig)
c. Combustion Air Low Pressure, PSL-4	(1.0 psig)
d. Fuel Gas High Pressure, PSH-6	(5.0 psig)
e. Air Blower Failure, MSD-1	-
f. Refractory High Temperature, TISH-3A/B	(2800°F)
g. Flame Failure, XY-1	-
h. Low Water Flow, FSL-6	(30.0 GPM)
i. Scrubber High-High Temperature, TSH-4	(180°F)

C. Control Room Panel Alarms and Switches

The following alarms and switches are located on the control room panel:

1. Switches or Pushbuttons

a. Burner Selector Switch (Low-Fire, High-Fire)

b. Pyrometer Selector Switch (No. 1, No. 2)

c. Emergency Shutdown Pushbutton

d. Annuciator Acknowledge and Test Button

V. Operation Procedures (Continued)

C. Control Room Panel Alarms and Switches (Continued)

2. Indicating Lights

a. "High-Fire"

b. "Low-Fire"

c. "Low Temperature"

d. "Low Temperature"

e. "Ready"

f. "Shutdown"

3. Malfunction Alarms	Set Point
a. Low Firebox Temperature, TAL-1	(2000°F)
b. High Firebox Temperature, TAH-1	(2600°F)
c. Steam Valve Open	-
d. Incinerator Alarm at Local Panel	-

4. Shutdown Alarms	Set Point
a. High Firebox Temperature, TAH-2	(2800°F)
b. Incinerator Shutdown at Local Panel	-

D. Malfunctions

The following alarms will indicate that there is a malfunction in the incineration system. Source of the problem should be located immediately to prevent an automatic or manual shutdown of the unit.

1. TAL-1 - Low Firebox Temperature (2000°F)

a. Check recorder, TR-1, to see if controlling pyrometer signal is in error. If it appears to be drifting, switch to other pyrometer for control.

b. Check steam temperature controller, TIC-1, for steam addition. Valve should be closed.

V. Operation Procedures (Continued)

D. Malfunctions (Continued)

1. TAL-1 - Low Firebox Temperature (2000°F) (Continued)

c. The set point for TIC-1 shall alway be greater than the one for TIC-2. Check fuel gas temperature controller, TIC-2, to see if fuel gas valve is fully open. If temperature continues to drop while venting, switch to "low-fire".

d. If temperature is decreasing in the "low-fire" mode, have outside operator check fuel gas flow and burner pressure.

e. If burner pressure is not normal, this may indicate a plugged burner or gas regulator malfunction. Shut the unit down.

f. Check combustion air pressure and line for sufficient air supply to burner.

2. TAH-1 - High Firebox Temperature (2600°F)

a. Check the pyrometer signals for error. Switch to other pyrometer if this is the source of the problem

b. Check TIC-2 to see if fuel gas valve is closing.

c. The set point for TIC-2 shall always be less than the one for TIC-1. If fuel gas valve is closed, steam valve should be opening. Switch to "low-fire" if venting.

d. In "low-fire" mode have outside operator check steam flow and pressure. If the temperature continues to rise, the unit will automatically shut down.

V. Operation Procedures (Continued)

D. Malfunctions (Continued)

2. TAH-1 - High Firebox Temperature (2600°F) (Continued)

e. Check combustion air pressure and line for sufficient air supply to burner.

3. PAL-5 - Low Steam Pressure (60 psig)

a. If venting, switch to "low-fire". Keep in "low-fire" mode until normal steam pressure is established.

4. PAH-2 - High Fuel Gas Pressure (3 psig)

a. Pressure regulator, PCi-3, may be sticking or hung-up.

b. Decrease set point for TIC-2. Observe burner pressure at the pressure gauge located downstream of the fuel gas trim control valve, PG-10. If pressure does not decrease, the burner is plugged. Shut the unit down.

5. TISH-3A or 3B - High Refractory Temperature (2800°F)

a. Check TR-1 for firebox temperature as measured by the pyrometers.

b. If normal conditions exists, alarm indicates burnt out thermocouple. Maintenance should replace the burnt out thermocouple at the earliest convenient time since the unit will shutdown if the other thermocouple burns out.

6. FISL-7 - Low Scrubber Water Flow (3.5 GPM)

a. Immediately check water pressure at the gauge located downstream of the total flow indicating shutdown switch, PG-8. If low, switch to spare strainer.

V. Operation Procedures (Continued)

D. Malfunctions (Continued)

6. FISL-7 - Low Scrubber Water Flow (3.5 GPM) (Continued)

b. After switching strainers and water flow hasn't increased, open the globe valve further.

7. TAH-4 - High Quench Effluent Temperature (160°F)

a. Check TR-1 for normal firebox temperature.

b. If water flow is low, try switching to spare strainer.

c. If temperature does not drop, put unit into "low-fire" mode.

8. LAH-1 - High Quench Tank Water Level

a. Check total water flow at the total flow indicating shut-down switch, FI-6. If flow is above 50 GPM, close globe valve at the quench tank until flow is less than 50 GPM (100% on the scale).

b. Open drain valve on quench drain seal leg. Close valve after level drops below the high level set point.

c. If in "high-fire" mode of operation, put incinerator in "low-fire". If level does not decrease immediately, close the globe valve for the quench tank feed. Do not decrease the flow below the set point for FISL-6 (30 GPM) (60% on the scale).

V. Operation Procedures (Continued)

D. Malfunctions (Continued)

8. LAH-1 - High Quench Tank Water Level (Continued)

d. If high level continues and burner operation becomes erratic (increase gas and air pressure at burner, poor temperature control, etc.), shut the unit down before water level reaches the firebox. After unit is shut down, block in water flow to unit.

9. FSL-2 - Switch to City Water (35 GPM)

a. Check to see if the cooling water blowdown line is blocked in or plugged.

b. If the switch was due to a power outage, do not reset valve until the power has been completely restored in the plant.

E. Shutdown Mode

The incinerator can be manually shut down by a switch on the plant and local control panel. Shutdown will also be automatically initiated under the following emergency conditions:

		Set Point
1.	High fuel gas pressure	(5.0 psig)
2.	Low fuel gas pressure	(0.3 psig)
3.	Flame failure	-
4.	High firebox temperature	(2800°F)
5.	Low water flow	(30.0 GPM)
6.	Low combustion air pressure	(1.0 psig)
7.	High quench effluent temperature	(180°F)

V. Operation Procedures (Continued)

E. Shutdown Mode (Continued)

	Set Point
8. High inert vent pressure	(5.0 psig)
9. Air blower motor failure	-

The double block and bleed setup for the fuel gas and inert vent line shall close automatically during all emergency shutdown conditions. When the incinerator is in a shutdown mode, the unit will be purged with air. The air blower will remain on unless the shutdown was caused by the air blower motor failing. Steam will be used to purge the unit for two minutes only on air blower shutdown. If the problems which created the shutdown condition, cannot be eliminated in a short period of time, shut the blower off to avoid cooling the refractory excessively (less than 1000°F). However, do not shut the blower off until the steam line is blocked in. The steam purge comes on automatically whenever the air blower motor stops. Therefore, the steam line should be blocked in to avoid cooling the refractory unnecessarily.

F. Start-up Procedures

1. Check all circuit and safety limit switches for normal conditions:

   a. Total water flow (flow indicating switch downstream of strainers, FI-6) should be 46 GPM (read 80% on the scale).

V. Operation Procedures (Continued)

F. Start-up Procedures (Continued)

b. The "City Water" alarm on the local panel should be off.

c. Scrubber water flow (flow indicating switch downstream of globe valve, FI-7) should be 6 GPM (read 67% on the scale).

d. Fuel gas pressure (pressure gauge downstream of pressure regulator, PG-6) at the incinerator should be 3 psig.

e. Steam pressure (pressure gauge upstream of steam control valve, PG-5) at the incinerator should be greater than 100 psig.

2. In the control room the burner selector switch should be in "low-fire" position.

3. At the local panel, the operation mode switch should be in the "warm-up" position.

4. The on-off switch should be in the "off" position and the burner selector switch should be on "low-fire" at the local panel. The automatic block valves in the fuel gas line must be closed.

5. Start air blower, F-1, by pressing the pushbutton for the blower. The "blower-on" light should come on. Turn the local burner selector switch to "high-fire".

6. Have panel operator put fuel gas temperature controller (TIC-1) on manual. Make sure trim fuel control valve is wide open, so as not to restrict fuel gas flow for main burner light off.

V. Operation Procedures (Continued)

F. Start-up Procedures (Continued)

7. Check combustion air pressure (1.5 psig) and purge air flow (FI-5) to pyrometers. A flow rate of 7.0 CFM is required for each pyrometer.

8. To start purge cycle, turn on-off switch to the "on" position. Press the purge pushbutton. "Purging" light should come on. This light will remain on until the three minute purge cycle is complete. The "purge-complete" light should then come on.

9. The pilot is ready to be ignited. Turn burner selector switch to "low-fire".

10. Depress and hold the burner start pushbutton. The solenoid valves in the pilot line should open and the "pilot-on" light will come on indicating the flow of fuel gas to the pilot.

11. If the pilot is ignited and the flame is proven within ten seconds, the "flame-on" light will come on. The start button can be released.

12. If the pilot flame has not been established within ten seconds after depressing the burner start button, the solenoid valves will close and the "pilot-on" and "purge complete" lights will go off. Turn burner selector switch back to "high-fire". The unit must be repurged starting from step 8.

13. After the pilot flame has been proven, the pilot will remain on until the operation mode switch is turned to the "run" position. In the "run position the solenoid valves in the main fuel gas line will open, thus igniting the main flame.

V. Operation Procedures (Continued)

F. Start-up Procedures (Continued)

After ten seconds the pilot solenoid valves close. As long as the main burner flame is proven, the "flame-on" light will remain on. The incinerator is ready to proceed through a proper heat-up schedule (step 16).

14. If the main burner does not ignite and the pilot flame is out, the main fuel gas solenoid valves will close. Turn burner selector switch back to "high-fire". The incinerator has to be restarted from step 8.

15. Providing the refractory does not require curing or the incinerator hasn't cooled down below 1000°F, the unit can be brought on line without proceeding through the heating schedule outlined below (step 16). Turn the burner selector switch to the "remote" position at the local panel. In the control room, the board operator controls the temperature rise by manually regulating the fuel gas control valve. The temperature should raise approximately 125°F per hour. This can be observed by checking the refractory temperature indicators on the local panel at the incinerator. When the firebox temperature is above 2000°F, the "low temperature" light should go off and the "ready" light should come on. Put the temperature controller for the fuel gas (TIC-2) on automatic. At the local panel turn the burner selector switch to the "low-fire" position. The incinerator is now ready to follow the operation sequence for inert venting.

V. Operation Procedures (Continued)

F. Start-up Procedures (Continued)

16. For curing the combustion air and fuel gas valve will have to be unlinked temporarily. The air valve will be throttled as a means of temperature regulation during the first phase of the cure.

Note: During the initial cure Trane's Service Engineer will train the operators on the appropriate procedures to follow for this phase of operation.

A. Raise temperature to 250°F during a three-hour period. Hold the temperature at this level for a minimum of sixteen hours. The continuous pilot will be used for this phase. The operation mode switch should be on "warm-up".

B. Raise temperature to 1100°F over a seventeen-hour period, at a rate of approximately 50°F per hour. This will require turning the operation mode switch to the "run" position. The change over from pilot to "low-fire" main flame would occur during this time.

C. Increase the temperature at a rate of 100°F per hour to 1500°F over a four-hour period.

D. Raise temperature from 1500°F to 2400°F over a five-hour period, at a rate of approximately 175°F per hour. Relink the combustion air and fuel gas control. Place the fuel gas controller on automatic.

V. Operation Procedures (Continued)

F. Start-up Procedures (Continued)

17. After the incinerator is on-line and has stablized, the unit should be checked periodically each shift for any deviations from established operating norms.

G. Venting Operation

1. Prior to starting vent flow, all alarm lights should be off at the local panel. The burner selector switch at the local panel and in the control room should be in the "low-fire" position.
2. A run light in the control room should indicate that the unit is "ready". Check TR-1 to see if the temperature has stabilized within the last ten minutes. TIC-1 and TIC-2 should be on automatic.
3. At the local panel turn the burner selector switch to "remote" position.
4. When the pressure in the RVCM receivers reach 70 psig, this is an indication that it may be time to vent the inerts from the RVCM receivers. The board operator will use his discretion in determining when the receivers should be vented.
5. Check to see that the refrigeration unit is operating.
6. Press the burner selector switch in the control room to "high-fire". The linked combustion air and fuel gas valves at the incinerator will shift to their "high-fire" position. After their position is proven, the vent line safety shut-off valves

V. Operation Procedures (Continued)

G. Venting Operation (Continued)

open and the bleed valve closes automatically. CV-1 will then slowly ramp open. Flow indication should register on FI-1. The inert vent flow will stablize between 500 to 1000 SCFH. The flow rate is controlled by setting the burner pressure inlet with PC-2.

7. Check the temperature controllers frequently for stable incinerator operation.

8. The venting is terminated at the operator's discretion. Indications of the depletion of inerts from the receiver will occur when the pressure decreases and levels out in the receiver or when the fuel gas valve begins to close. If the fuel gas valve is closed, and the steam valve is open, this will probably indicate that all of the inerts have been vented and the vent flow to the incinerator is all VCM.

9. To terminate vent flow press the burner selector switch to "low-fire". The incinerator will automatically shift to the "low-fire" position. Prior to the linked valves shifting, CV-1 will ramp close and the double block valves will close.

10. Check the temperature controllers periodically for stable incinerator operation when it is in the "low-fire" mode.

conoco

Interoffice Communication

To S. J. Vincent

From V. E. Messick

Date March 17, 1980

Subject OPERATING PROCEDURES - DELTECH AIR DRYER

Attached are the operating procedures for the Deltech air dryer. A daily log sheet with explanation has been provided to assist the operator in checking the dryer and understanding what the normal conditions should be. More information on maintenance as well as detailed drawings of air flow, refrigeration, and electrical are included in the Deltech manuals. These manuals have already been distributed to the maintenance and operating heads involved. Maintenance and operating people were instructed about this manual by the Deltech service representative.

If you have any questions, please call me.

Veldon E. Messick

Veldon E. Messick
Senior Process Engineer

jf

Attachments
c: CLM, JLH, FWF(5), MCJ, RAF, MSR, AHS

OPERATING PROCEDURES

DELTECH AIR DRYER

TABLE OF CONTENTS

I. THEORY OF OPERATION

II. GENERAL PROCESS DESCRIPTION

III. STARTUP

IV. RUN PROCEDURE

V. DESIGN FEATURES

A. DESICCANT SYSTEM
B. ELECTRICAL SYSTEM
C. REFRIGERATION SYSTEM

VI. DAILY OPERATOR CHECK

VII. TROUBLESHOOTING

VIII. DELTECH AIR DRYER FAILURE

I. THEORY OF OPERATION

The heat pump dryer functions to provide a continuous supply of dry air by automatically cycling the operation of two desiccant beds: one adsorbing moisture from the air, the other being reactivated. Desiccant is used to store the water removed from the inlet air until the cycle reverses and the water is carried out to the atmosphere by the low pressure reactivation purge air. Reactivation of the offstream bed is accomplished by reducing the pressure of a portion of the dried air, thus expanding its volume, and then passing this purge air through the bed of desiccant that is being reactivated. At the same time, this bed is being heated by hot refrigerant. The basic principle which makes this type of reactivation possible is that, at a given temperature, the quantity of water vapor carried in a saturated air stream depends only on the volume of the air. A volume portion of air at atmospheric pressure can contain as much water as a similar volume at an elevated pressure at the same temperature. The amount of water vapor removed from the system druing reactivation is determined by the temperature and flow of reactivation air. The dryness of the exit air can therefore be maintained at a very low level by controlling the temperature and flow of reactivation air (purge air).

The Deltech heat pump dryer utilizes a chiller to remove approximately 75% of the moisture contained in the inlet air before the air contacts the desiccant. The amount of desiccant needed to adsorb the remaining 25% moisture is much less than that required to adsorb the entire moisture load as is the case with ordinary desiccant dryers. The energy removed from the inlet compressed air in the chiller is used for regeneration of the offstream desiccant bed. The inlet energy, increased via the "Heat Pump" action of the refrigerant compressor, increases the temperature of the purge air, and thereby decreases the flow of the purge air required.

The capacity of a desiccant to adsorb moisture at ultra low vapor pressures (ultra low dew points) is increased as the temperature is reduced. In the Deltech heat pump dryer, the chiller (refrigeration system) is also used to maintain the desiccant bed at low temperature throughout the drying cycle regardless of the heat of adsorption.

The refrigeration system quickly cools the desiccant when the vessel cycle shifts from regeneration to drying. Fluctuations in the dew point of the exit air are much less than those experienced in drying systems that do not include refrigeration.

Since the desiccant is not exposed to the very high temperatures needed for regeneration of systems without refrigeration, desiccant life can be expected to be substantially longer.

II. GENERAL PROCESS DESCRIPTION

The Deltech heat pump dryer takes advantage of the operating economics of refrigerated air dryers and the low dew point capability of desiccant. Refer to the schematic air flow diagram in Figure 1. In the heat pump process, the warm, wet compressed air enters a chiller where the temperature of the air is reduced to approximately 50°F. Condensed moisture is separated and drained away from the chiller. The air leaves the chiller and flows into the desiccant vessel that is on the drying cycle, where additional moisture by adsorption down to the desired dew point. Inside the desiccant bed is a heat exchanger through which cold refrigerant is passed to keep the desiccant bed cool.

Simultaneously, the alternate desiccant bed is being regenerated by heat from its exchanger which is now in series with the reheater. Hot refrigerant from the compressor is passed through coils in the desiccant bed to elevate the temperature of the desiccant.

A small portion of the dry air from the reheater (purge air) is let down through an orifice and a pressure regulator. This air is used to sweep away moisture desorbed from the regenerating desiccant. It is the rate of this purge air flow that controls the dew point of the outlet air.

The unit is equipped with repressurization valves so that as the unit approaches its switchover point, the offstream bed is repressurized. This avoids pressure changes on cycle change.

A key factor affecting the dew point of the outlet compressed air is the amount of air used for purge. The purge valve and the purge timer is set at the time of startup to supply the specified dew point. Any re-adjustment of this valve should be done only after consultation with the factory

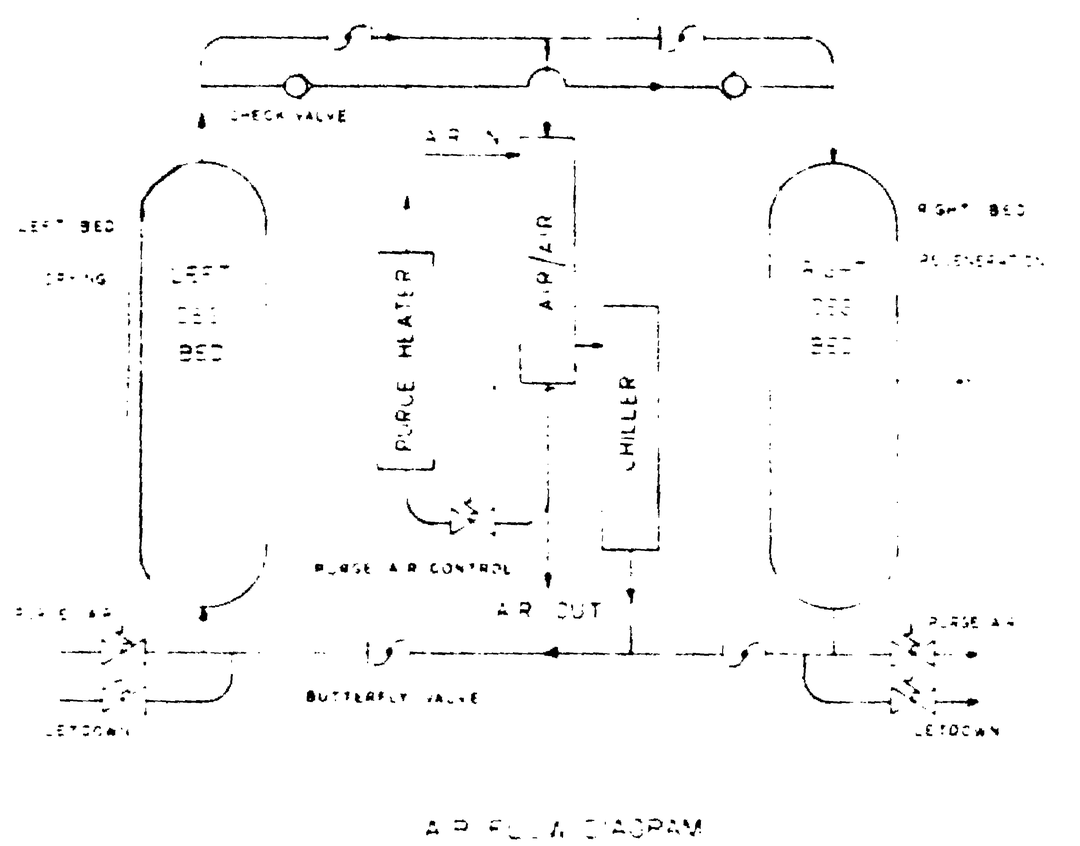

AIR FLOW DIAGRAM

Figure 1

III. STARTUP CHECKLIST

After the installation has been completed and the unit has been authorized for startup, the following items should be checked:

A. Check main electrical supply to insure that correct voltage and fuses are provided.

B. Release refrigerant charge from condenser. (This is done only for initial startup.)

C. Check proper connection and support of compressed air lines to the dryer.

D. Check water supply connections to the condenser (inlet to the water valve). All the manual valves in the system should be open.

IV. RUN PROCEDURE

A. Turn on main electrical power to the dryer, first making sure the dryer ON/OFF switch is in the OFF position. The dryer must be left in this mode for at least four hours to allow the refrigeration compressor crankcase heaters to complete their function. This procedure should be carried out if the main power supply to the dryer has been off for more than four hours.

B. Crank open the valve on the inlet line sufficiently to pressurize the dryer. When the dryer is up to pressure, check all pipework connections for leaks.

C. When the dryer is pressurized, check that the air supply to the valving cylinder is set at 60 psig and there is oil in the lubricator.

D. When all checks are complete and the four hours has expired, turn the dryer ON/OFF swtich to the ON position.

E. Let the dryer run for approximately five minutes to allow stabilization of the refrigeration system before slowly opening the outlet valve and closing valve to existing GDI dryer (see Section VIII).

V. DESIGN FEACTURES

A. Desiccant System

Deltech heat pump dryers utilize desiccants such as silica gel, activated alumina, or both to adsorb moisture. Life expectancy for the desiccant in Deltech heat pump dryers is three to five years, depending upon inlet air quality and flow uniformity. Since there are no internal electrical heaters to cause large temperature differentials as in other types of compressed air dryers, the deleterious effect on the desiccant of excessive temperature has been virtually eliminated.

The heat exchangers within the desiccant vessels act as a support for the drying media while also ensuring uniform heating/cooling distribution during the drying and regeneration cycles.

B. Electrical System

The electrical system of the dryer is designed around a cam timer that provides all the control function for changing the air flow and cooling/heating flow through the desiccant beds.

Indicating lights and all the other controls to provide starting and protection for the compressor are also included. The electrical schematic included with the Deltech operating manual details all the equipment provided for the dryer. The circuit describes the function of each control provided.

C. Refrigeration System

Refrigerant flow to the chillers is automatically regulated by a thermostatic expansion valve (TEV).

As shown in Figure 2, a system of solenoid valves (cam timer controlled) and check valves has been added to the basic refrigeration circuit of expansion valves, etc., to direct the flow of refrigerant from one bed to another.

The dotted line indicates the flow of refrigerant for the cooling cycle. Refrigerant flow for the instance shown is through the left bed, as solenoid valves SB and SC are open, allowing flow through check valves CA and CD. Under these circumstances, the left bed is on the drying cycle and the right bed is being regenerated. The flow pattern through the desiccant beds is reversed when the right tower is drying.

A second control valve (hot gas bypass, HGBV) is used in conjunction with the TEV to prevent freeze-up within the chiller, and to provide capacity control for the compressor when little or no compressed air is being used.

V. DESIGN FEATURES

C. Refrigeration System (Cont.)

A second TEV is used to control the flow of refrigerant through the desiccant vessels. These valves are preset at the factory and may be readjusted on site by the startup engineer depending upon the application. Adjustments should be made only by a trained refrigeration engineer.

See the maintenance section of this manual for adjustment procedure and temperatures.

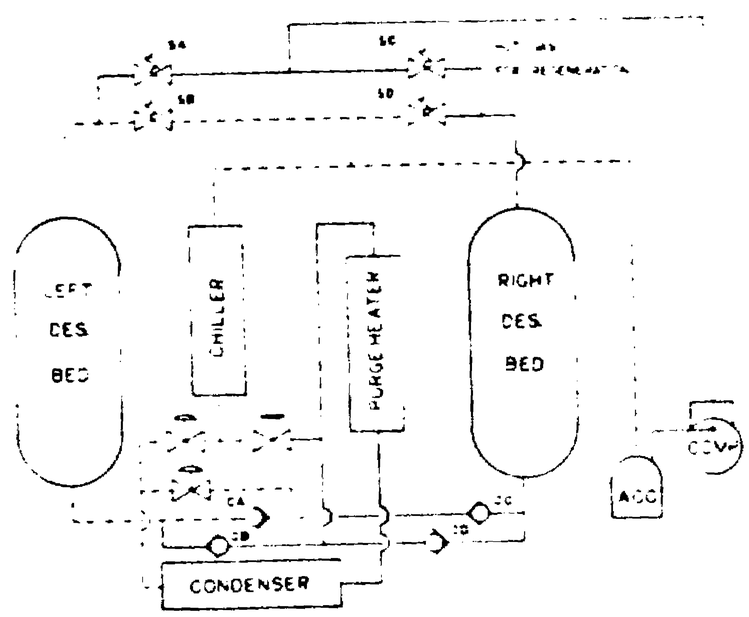

Figure 2

VI. DAILY OPERATOR CHECK

A. Automatic drain on prefilter should be checked to insure proper functioning. A discharge in excess of one pint indicates a possible malfunction of the drain trap. Remove trap and clean all internal moving parts.

B. Afterfilter should be blown down by operating manual valve on filter. This will prevent the buildup of excess dust particles, etc.

NOTE

Just after startup, settling down of the desiccant within the towers will cause more dusting than can be expected during normal running periods. The amount of dusting will dimish with operation.

C. Chiller drain trap located at bottom of chiller should be checked to insure it is working. The trap on the air to air exchanger should also be checked.

D. Check for a positive discharge from the purge air line.

E. Complete the "Daily Log Sheet for the Deltech Air Dryer" as described below:

1. Check to make sure the ON/OFF switch is on. If it is, place a checkmark in the "POWER/ON" space on the logsheet. If it is off, turn power ON.

2. Check that the compressor running light in on. If it is on, place a checkmark in the "COMP. ON" space on the logsheet.

3. Place a checkmark in the space on the logsheet for the appropriate bed that is drying and regenerating.

4. Check the high head pressure, switch failure, and high humidity lights. If none are lit, place a checkmark in the appropriate spaces on the logsheet. If the switch failure light is on, check the pressure regulator to the switching cylinders. It should be set at 60 psig. If the high head pressure light or the high humidity light is lit, consult the troubleshooting portion of these precedures.

5. Record the refrigeration suction pressure on the logsheet. It should be between 50 and 65 psig with 54 psig being normal.

6. Record the refrigeration head pressure on the logsheet. It should be between 180 and 220 psig with 200 psig being normal.

VI. DAILY OPERATOR CHECK

7. Record the temperatures of the towers on the logsheet.

8. Record the tower pressures on the logsheets. The tower that is regenerating should be at atmospheric pressure except for 5 minutes before switch to 5 minutes after switch. During this time, it should be line pressure. The tower that is drying should be at line pressure.

9. Record air cylinder pressure on logsheet. The pressure regulator should be set at 60 psig.

10. Check purge air pressure. It should be set at 40 psig. The purge timer should be set at 6 seconds on and 12 seconds off. Any change from this purge setting should be done only after consulting Deltech engineering.

11. Inspect refrigeration sightglass. It should be clear with no bubbles and the indicating area should be green. A continuous stream of bubbles indicates loss of refrigerant charge. A color change from green to yellow indicates contamination.

12. Check refrigeration compressor oil level.

13. Record date and time readings taken.

A

VII. TROUBLESHOOTING

The following charts are provided to help determine the cause and remedy for the most of the faults that may occur.

DAILY LOGSHEET FOR THE DELTECH AIR DRYER

LIGHTS									GAUGES								MISC.			
Power On	Comp. On	Lft. Bed Drying	Rt. Bed Drying	Lft. Bed Regen.	Rt. Bed Regen.	High Head Press.	Switch Fail	High Humidity	Refrig. Suction Press.	Refrig. Head Press.	Lft. Tower Temp.	Rt. Tower Temp.	Lft. Tower Press.	Rt. Tower Press.	Air Cyl. Press.	Purge Press.	Refrig. Sight Glass	Comp. Oil Level	Date	Time

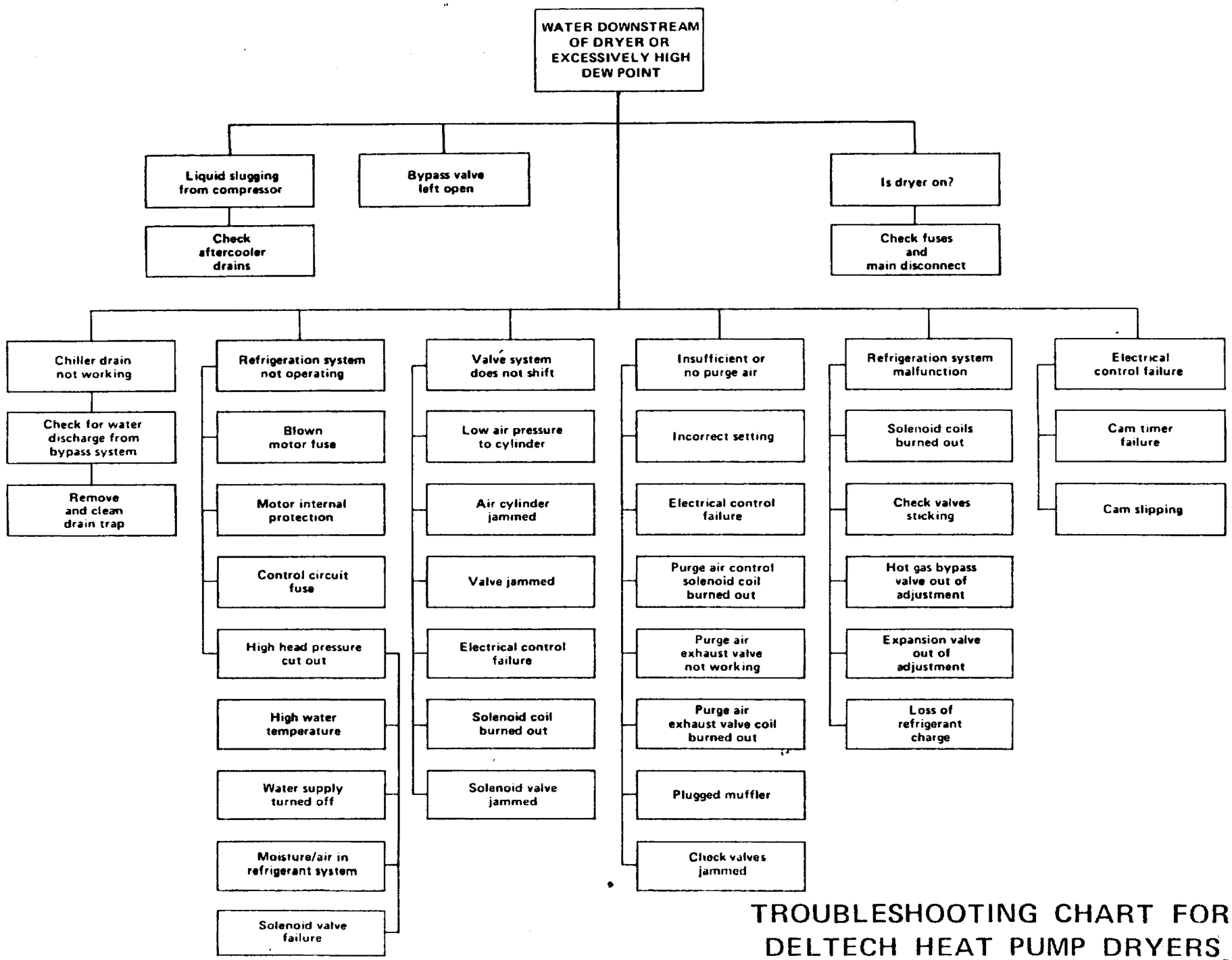

TROUBLESHOOTING CHART FOR DELTECH HEAT PUMP DRYERS

VAB.0001132796

PROBLEM	PROBABLE CAUSE	CONFIRMING CHECK	CORRECTIVE ACTION
Water downstream of dryer or excessively high dew point	1. Dryer turned off	Check if dryer light is on.	Turn on after completing startup procedure.
	2. Dryer on; bypass valves open	Note location of valve actuator.	Check why open. Close providing bed is pressurized.
	3. Drain trap on chiller not working	See if water is discharging from drain pipe.	Dismantle valve; clean or replace. This should be a routine daily maintenance program.
	4. Refrigeration system completely shut down	Compressor on, light off.	Check main supply fuses and control circuit fuse.
		Compressor on, light on.	Check compressor control fuses at compressor electrical box.
	5. Air flow valve system does not shift	Manually rotate cam timer to next change location.	Insure that air supply to actuator is above 60 psig.
			Insure that there is oil in air line lubricator.
			Check proper operation of solenoid control valve.
	6. Insufficient or no purge air	Check exhaust from purge air muffler.	Increase pressure of purge air to factory preset reading.
	7. Refrigeration system malfunction resulting in high suction pressure	Check comparative temperatures of refrigerant solenoid and check valves using manual as guide.	Replace or repair faulty component.
	8. High suction pressure	Check refrigerant charge for leaks.	Check for leaks and recharge.
		Check adjustment of hot gas bypass valve	Readjust to correct reading (54 psig) or replace if faulty.
	9. Inlet air temperature too high	Check temperature of inlet air and compare with specification sheet.	Check temperature of air from aftercooler and adjust if required.
	10. Chiller iced up	Check refrigerant suction pressure.	Adjust hot gas bypass valve to give suction pressure of 54-65 psig.
			If too low, increase head pressure to 210 psig.
			Replace malfunctioning hot gas bypass valve.
	11. Excessive flow	Check specification for design limits.	Add another dryer. Consult factory.
	12. Air pressure too low	Check specification for design limits.	Bring up to pressure. Consult factory.
	13. Electrical control failure	Check circuit functions using electrical schematic.	Repair as required.

PROBLEM	PROBABLE CAUSE	CONFIRMING CHECK	CORRECTIVE ACTION
Refrigeration compressor cut out on internal protection	1. High current drawn	Unit should restart automatically when cooled down.	When unit restarts, check current drawn. Unit should run at rated amps shown on motor plate.
	2. Leak in refrigeration system		This should be checked only by a trained refrigeration engineer.
High current draw on refrigeration compressor(s)	1. Short in windings	Use "mega" across windings to ground to check short.	Replace compressor.
	2. Leak in refrigeration system		This should be checked only by a trained refrigeration engineer.
	3. Low on compressor oil	Check level through sight glass.	Add oil. If no improvement, replace compressor.
Continuous bubbles in sight port	Loss of refrigerant charge	Check if exit dew point is too high.	Check for leaks in system and repair. This should be done only by a trained refrigeration engineer.
Sight port indicator change to yellow	Moisture in system	High head pressure should not exceed 300 psig.	Find leak in suction side of refrigeration system and repair. This should be done only by a trained refrigeration engineer.
No purge air during normal cycle	1. Purge air strainer blocked	Check for air exiting purge and letdown mufflers.	Clean strainer.
	2. Purge air solenoid valve closed or plugged		Clean solenoid valve.
	3. Purge air control valve closed	Note handle position and gage pressure.	Reset to pressure noted in specification sheet.
	4. Purge air exhaust valve closed	Purge air gage reads higher than normal.	Replace valve or valve coil.
	5. Purge air and letdown mufflers plugged	Tower pressure on regeneration cycle should read 0.	Remove muffler and note dryer performance Clean and replace.
High pressure air in bed being purged	1. Butterfly valve leaking	Shut down all other sources of high pressure air and note results.	Readjust or replace valves. Lubricate.
	2. Valving motion not complete	Check all valve attach points and note location of direction of flow indicator.	Check and replace worn links or pins. Readjust air cylinder motion. Lubricate.
	3. Process air check valve leaking	Reverse cycle to see if other valves hold.	

PROBLEM	PROBABLE CAUSE	CONFIRMING CHECK	CORRECTIVE ACTION
Compressor cut out on high head pressure switch	1. Water supply turned off	Check manual valves.	Open valves.
	2. High inlet water temperature	Water supply should not exceed 90°F.	Reduce temperature of water supply.
	3. Water supply pressure too low	Pressure should not be below 30 psig.	Provide boost pumps.
	4. High inlet air temperature	Inlet air temperature should not exceed design specification by more than 20°F.	Increase aftercooler efficiency.
	5. Condenser fouled and dirty	Temperature rise across condenser should not be more than 5°F.	Dismantle and clean.
	6. Air in refrigerant system	Check color indicator through sight glass.	Check for leak in refrigerant system.
		Head pressure stays high when compressor is turned off.	This should be corrected only by a trained refrigeration engineer.
	7. Solenoid valve in refrigerant system fails to open	Feel temperature of vavle using guide in manual. Open valve manually and note effect.	Replace valve coils.
			Check cam timer controls.
			Check electrical system.
	8. Check valve in refrigerant system jammed shut	Feel temperature of valve using guide in manual.	Lightly tap suspected valve and note results.
			If valve cannot be freed, pump down refrigerant and replace valve poppet. This should be done only by a trained refrigeration engineer.
	9. Water valve failure	Wait until switch resets. Restart dryer and note water flow conditions.	Replace valve or valve equipment.
Refrigeration compressor cut out on low pressure	1. Low inlet load	Check flow and temperature of inlet air.	Compressor should restart after suction pressure rises and timer runs out.
	2. Loss of refrigerant charge	Turn off unit for 5 minutes. Restart, watching sight port. Bubbles should appear at first, then clear if system is full. If no bubbles appear, system has lost charge.	Check for leaks in system, repair and recharge with R22 until bubbles disappear. See specification sheet.
	3. Hot gas bypass valve out of adjustment	Hot gas should be present after valve if load is below rated conditions.	Adjust valve so that suction pressure is 54 psig.
	4. Failure in solenoid control system for refrigerant changeover	Check temperature of valves using guide in manual.	Check electrical control system and replace or correct faulty component.
		Use manual lift stem to open valve and note conditions.	
	5. Refrigerant solenoid valve stuck closed	Check operating condition while unit is running to note temperature of valves.	Tap lightly and note any change. If valve does not release, replace poppet after pumping down system. This should be done only by a trained refrigeration engineer.

VIII. DELTECH AIR DRYER FAILURE

In the event that the Deltech air dryer fails to perform, the procedure below should be followed. To take the Deltech off stream and put the GDI dryer on stream:

A. Turn on the power to the GDI dryer.

B. Open the valves to the inlet and outlet of the GDI dryer so that air can flow through the dryer.

C. Open the valve connecting compressor number 8 (72-708) to the surge drum near the Kemp dryers so that air from this compressor can flow through the Kemp dryers. (See Note 1.)

D. Close valve connecting compressor number 8 (72-708) to the Deltech dryer.

E. Close inlet and outlet valves to the Deltech.

F. Depressurize Deltech dryer using afterfilter bleed valve.

NOTE: (1) The GDI dryer is only rated for the air from one compressor. The air from one compressor, (72-708), must be routed through the Kemp dryers.

The following procedure should be used in switching from the GDI dryer to the Deltech dryer, after the Deltech dryer is running (see startup procedure for Deltech Sec. III).

A. Crack the valve on the inlet of the Deltech prefilter and slowly let the Deltech dryer pressurize. When it is pressurized, open valve fully.

B. Open the valve on the outlet of the Deltech dryer.

C. Close the inlet and outlet valves on the GDI dryer.

D. Turn power off to the GDI dryer.

E. Open valve connecting compressor number 8 (72-708) to the Deltech dryer.

F. Close valve connecting compressor number 8 (72-708) to the surge drum near the Kemp dryers.