PLAINTIFF'S EXHIBIT

ETCO-788

Brown & Root, Inc. Post Office Box Three, Houston, Texas 77001

December 17, 1979

Construction Services, Inc.
P.O. Box 96407
Houston, Texas 77013

Attn: Don Burchfield

Subject: Subcontract No. 27-4207-5003
"Provide & Install Insulation"
Ethyl Corp.
Pasadena, Texas

Dear Mr. Burchfield:

The attached fully executed copy of Subject Subcontract No. 27-4207-5003 is for your files.

Very truly yours,

BROWN & ROOT, INC.

D. L. Seyfert
Subcontracts Department
Procurement Division
(01-115) (676-8452)

DLS/gl

Enclosure

bcc: R. Cadwell
E. Kernan
J. Morrow
J. Brooks
RF/RMB
RF/CIRC
FILE: S/C 27-4207-5003
FILE: Alpha

Form P-160 (1-79)

Brown & Root, Inc.

BR/sc
SUBCONTRACT

Job Number 27-4207

Subcontract No. 27-4207-5003

ETHYL PLANT PROJECT
(Project)

PROVIDE AND INSTALL INSULATION
(Sublet Work)

NOVEMBER 19, 1979
(Effective Date)

THIS SUBCONTRACT, by and between BROWN & ROOT, INC., a Texas Corporation, P. O. BOX 3, HOUSTON, TEXAS 77001, "GENERAL CONTRACTOR" and,

CONSTRUCTION SERVICES, INC.

a Corporation (Corporation, Proprietorship, Partnership) under laws of Texas (State)

whose address is P. O. Box 96407, Houston, Texas 77013

"SUBCONTRACTOR," whose contractor's license number under laws of Not Applicable

is Not Applicable, entered into as of the EFFECTIVE DATE stated above,

WITNESSETH:

In consideration of the mutual promises herein contained General Contractor and Subcontractor agree, promise, and obligate themselves as follows:

1. Subcontractor promises to perform the Sublet Work for the Project in accordance with the Contract Documents.

2. General Contractor promises to pay Subcontractor, for full, accurate and timely performance of the Sublet Work in accordance herewith, the Price and other payments, and promises to perform all of the other obligations of General Contractor, as set forth in the Contract Documents.

3. The Contract Documents constituting this Subcontract consist of:

a. "Subcontract Terms" and exhibits thereto.

b. "Special Conditions" and exhibits thereto.

c. "General Conditions" P-50 1-79

d. "Affidavit for Subcontractor"

e.

f.

Project Account Code 35681-937315

Vendor Code No. 03866134

Net Price: $ 33,950.00

Terms: Monthly Progress Payments with retainage withheld
S/C Term # 8

00007

Subcontract No. 27-4207-5003

The foregoing constitutes the entire contract, and supersede all prior proposals, negotiations, agreements, awards, letter of intent and written or oral statements, representations or agreements.

4. The Effective Date set forth above is the date as to which all Contract Documents and provisions thereof have reference for purposes of coordination of their meaning and effect. The price relates to the Sublet Work as described in drawings, specifications and other Contract Documents in their condition on that date. Changes after the effective date will be dealt with in accordance with the provision for changes. Any work commenced and any payment made pursuant to an Award or Letter of Intent prior to the execution hereof shall be deemed to have been done and paid after the Effective Date under the terms of this Subcontract.

GENERAL CONTRACTOR:

BROWN & ROOT, INC.

By: Susan Shero Mathes
for D. E. Newton, Jr.
Title: Vice President - Procurement

Date: December 14, 1979

SUBCONTRACTOR:

CONSTRUCTION SERVICES, INC.

By: Donald R. Bumbgarner Jr.

Title: ESTIMATOR

Date: 12/7/79

SUBCONTRACT TERMS

SUBCONTRACT NO. 27-4207-5003

1. SUBLET WORK

1.1 The Sublet Work, in general, is to furnish, deliver and install insulation as specified hereunder for Alcohol Tower C-708 and Reboiler E-724 in addition to all associated piping, heads, manways, filters and Alcohol Tower sump and piping at the Ethyl Corporation site in Pasadena, Texas.

1.2 More specifically, the Subcontractor agrees to perform the Sublet Work which consists of furnishing all labor, materials, tools, scaffolding, construction equipment, supervision, taxes, insurance and all accounting, management and administration, and all other things necessary (except for that described in Subcontract Term No. 3 herein) to perform the Sublet Work described herein for the Project at the above described location. All sublet Work shall be performed in accordance with and pursuant to the requirements of the drawings and specifications described in Subcontract Term No. 2 hereunder, and all other provisions of the Subcontract Documents.

2. DRAWINGS AND SPECIFICATIONS

2.1 The Sublet Work shall be performed in accordance with, and all Bill of Material quantities developed by the Subcontractor shall comply and conform to the requirements of, the project drawings and specifications identified hereunder, in addition to the Reboiler E-724 and associated piping drawings which are not identified herein but may be forthcoming; all of which are hereby incorporated into this Subcontract by reference:

2.1.1 All drawings listed on attached "Drawing List".

2.1.2

Drawing Description	Drawing Number
Alcohol Tower (elevation)	79-2029-1A
Alcohol Tower (Detail of skirt base, etc.)	79-2029-1C
Alcohol Tower (Detail of sump, etc.)	79-2029-1D
Vertical Manway	79-2029-1E
Alcohol Tower (Detail of Chimney Tray, etc.)	79-2029-1H
Alcohol Tower (Detail of Vessel, etc.)	79-2029-1J

2.1.3 Ethyl Corp. specification No. SP-92-1 "Hot Insulation".

2. DRAWINGS AND SPECIFICATIONS - (Continued)

2.1 Continued

2.1.4 Sublet Work shall include the following in addition to those stated above:

A. Manway covers shall be insulated in a manner to allow removal of covers without damaging insulation.

B. Repair of three (3) linear feet of pipe insulation at all tie-in points.

C. All risers shall be insulated after vessel is erected.

D. Insulation of Tower shall be notched over steam tracing as necessary to allow insulation to maintain a flat exterior surface.

E. In addition to being insulated with the specified calcium silicate insulation, Reboiler and Reboiler Heads shall be weatherproofed with sixteen (16) gage galvanized steel. Insulation and weatherproofing shall be installed such that heads may be removed without damaging insulation or weatherproofing.

2.1.5 Vessel support areas which, as a result of not being able to maneuver the vessels while on the ground, cannot be reached shall be insulated after the vessels have been erected.

2.1.6 Alcohol Tower C-708 is steam traced as follows:

A. 1/2 inch steel tubing

B. 50 foot steel tubing lengths

C. tubing joints are raised at a level to be outside the insulation

D. sump of Alcohol Tower C-708 and associated piping is also steam traced.

3. FURNISHED BY GENERAL CONTRACTOR

General Contractor shall furnish to Subcontractor the following items:

3.1 Potable water and 110 volt electrical supply for small tools.

5. SUBCONTRACT PRICE - (Continued)

5.2 Any Change Orders necessitated as a result of Scope Changes made by General Contractor shall be priced in accordance with subcontract No. 27-4060-5024 dated April 4, 1979 inclusive of Change Order No. Two (2) dated November 12, 1979.

6. PAYMENT AND PERFORMANCE BONDS

As of the effective date of this Subcontract, Subcontractor is required to furnish separate 100% Payment and Performance Bonds, each in the total amount of the Subcontract Price for the following reimbursable premium rate and from the following surety company:

Bond Rate: $6.00 per $1000

Surety Company: United States Fidelity and Guarantee of Orange, Texas

The Bond premiums must be invoiced separate from the Sublet Work and shall be accompanied by paid invoices from the surety company.

7. AFFIDAVITS

Two copies of the General Contractor's "Affidavit for Subcontractor" (Form P-7) are attached for use in implementing the provisions of General Condition No. 32. Subcontractor shall execute and return one copy with his final or retainage invoice to the address shown in Subcontract Term No. 9.

8. PAYMENT

8.1 The following paragraph supplements Paragraph Number 32 of the General Conditions:

Subcontractor shall be paid in monthly progress payments the value of the Sublet Work satisfactorily performed during the preceding month based upon the firm lump sum price detailed and described in Subcontract Term No. 5 less 10% of such value as retainage until final completion and acceptance of the Sublet Work by General Contractor. Subcontractor shall prepare and submit an invoice for the proposed monthly progress payments and shall submit supporting documents and proof of payment of all bills for labor and materials, as may be requested by General Contractor. Subcontractor's invoice for proposed monthly progress payments with requested supporting documents and proof of payment of all bills will be submitted for approval by General Contractor and when approved, payment shall be made within thirty days thereafter. Final payment and release of retainage shall be made when the Sublet Work has been satisfactorily completed and accepted and Subcontractor has submitted the affidavit as called for in Subcontract Term 7.

9. INVOICES

Subcontractor shall render all invoices to the following:

Brown & Root, Inc.
209 N. Main Street
Pasadena, Texas 77506

Attn: Accounts Payable

10. INSURANCE

Subcontractor shall forward his Certificate of Insurance stating the names of its Insurance Carriers and certifying that its insurance coverages meet the requirements set forth in General Condition No. 12 herein to the following address:

Brown & Root, Inc.
P. O. Box 3
Houston, Texas 77001

Attn: D. L. (Don) Seyfert
(01-129G)

11. SUBCONTRACTOR'S REPRESENTATIVE

Subcontractor shall designate a site representative to the General Contractor. He or in his temporary absence, his designated assistant shall be "on call" at all hours and shall be in attendance at the work site during working hours from commencement of Sublet Work to completion. The Subcontractor's Representative shall be authorized to act in behalf of the Subcontractor, any instructions given to the Subcontractor's Representative shall be considered as having been given to the Subcontractor.

12. LABOR RELATIONS

The Subcontractor represents that its pre-hiring collective bargaining agreements, if any, contain or will contain provisions that, or Subcontractor has entered into or will enter into a project agreement modifying such collective bargaining agreement to provide that, there shall be no strikes, slowdowns, picketing, secondary boycotts, or work stoppages during the performance of the Sublet Work. Subcontractor will further subcontract only to lower-tier subcontractors having similar provisions in their collective bargaining agreements, if any.

13. WAGE/PRICE GUIDELINES

In accepting this Subcontract the Subcontractor warrants that the guidelines established by the President's council on wage and price stability have been adopted voluntarily and that the prices shown are in compliance therewith.

Drawing List

Job #35681

ED-30572-0	C-706	Oct. '79
ED-30573-0	C-706	Oct. '79
ED-30574-0	C-706	Oct. '79
ED-30575-0	C-706	Oct. '79
ED-30576-0	C-706	Oct. '79
ED-30577-0	C-708	Oct. '79
ED-30578-0	C-708	Oct. '79
ED-30579-0	C-708	Oct. '79
ED-30580-0	C-708	Oct. '79
ED-30581-0	C-708	Oct. '79
ED-30582-0	C-708	Oct. '79
ED-30583-0	Pipe Supports	Oct. '79
ED-30873-0	C-708	Oct. '79
ED-30874-0	C-708	Oct. '79
ED-30875-0	C-708	Oct. '79
ED-30876-0	C-708	Oct. '79
ED-30877-0	C-708	Oct. '79
ED-30878-0	C-708	Oct. '79
ED-30879-0	C-708	Oct. '79
ED-30880-0	C-708	Oct. '79
3771-3-50-2320-3	E-725	Foster Wheeler Corp.
3771-3-50-2322-5	E-724	Foster Wheeler Corp.
3771-3-50-2331-4	Install New Tower	Foster Wheeler Corp.
3771-3-50-2336-4	Install New Tower	Foster Wheeler Corp.
3771-3-50-2349-3	New Lines & Fittings	Foster Wheeler Corp.
3771-3-50-2350-4	Install New Tower	Foster Wheeler Corp.
3771-3-50-2353-4	New Lines & Fittings	Foster Wheeler Corp.
3771-3-50-2362-5	Remove AD25-4	Foster Wheeler Corp.
3771-3-50-2365-5	Added Dim. for PSD'S	Foster Wheeler Corp.
3771-3-50-2394-3	Added New Pipe & Flg's	Foster Wheeler Corp.
3771-3-50-23108-2	Revised Piping	Foster Wheeler Corp.

ITEM	CONTENTS	PAGE
1	GENERAL	2
1.1	INTENT	2
1.2	OSHA COMPLIANCE	2
1.3	SCOPE	2
1.4	LINE LIST	2
1.5	EQUIPMENT LIST	2
1.6	SPECIAL REQUIREMENTS	2
2	PIPING	3
2.1	MATERIAL	3
2.2	SECUREMENT	3
2.3	WEATHERPROOFING	3
2.4	FITTINGS	3
2.5	DETAILS	3
2.6	HANGERS & SUPPORTS	3
2.7	SINGLE LAYER	3
2.8	DOUBLE LAYER	3
2.9	SUPPORTS	3
3	EQUIPMENT	4
3.1	MATERIAL	4
3.2	SECUREMENT	4
3.3	WEATHERPROOFING	4
3.4	DETAILS	4
3.5	IRREGULAR SURFACES	4
TABLE 1,	THICKNESS	5
FIGURE 1 through 4	(Piping)	6-9
FIGURE 5 through 12	(Equipment)	10-17

1 GENERAL

1.1 INTENT. The intent of this specification is (1) to define the materials to be used for insulation of vessels, equipment, and piping in hot service, and (2) to define certain details of insulation application. The purpose of this insulation is to conserve heat (H) and/or to protect personnel (P). Any specific details not covered herein shall be in accordance with best area practice.

1.2 OSHA COMPLIANCE. All design and construction done in the United States under this specification shall be in strict compliance with the Williams-Steiger Occupational Safety & Health Act of 1970 (84 Stat. 1593, 1600; 29 U.S.C. 655, 657) as revised.

1.3 SCOPE. This specification covers the design and application of heat insulation systems for piping and equipment (vessels, columns, pumps, etc). It is intended to serve as a basis for contractor's bidding and performance. It is also intended to serve as a basic engineering guide to standardize and simplify the solution of recurring insulation problems.

1.4 LINE LIST. A separate document, the LINE LIST, indicates the pipe lines to be insulated in accordance with this specification. Insulation thickness will also be specified in the LINE LIST.

1.5 EQUIPMENT LIST. A separate document, the EQUIPMENT LIST, indicates the equipment to be insulated in accordance with this specification. The insulation thickness will also be specified in the EQUIPMENT LIST.

1.6 SPECIAL REQUIREMENTS

a. Lower Limit. Surfaces normally operating at less than 200F shall not be heat insulated unless specifically required for personnel protection or special process reasons.

b. Personnel Protection. Personnel protection insulation shall be applied to piping and equipment operating above 150F which may be accidentally touched by personnel. Such hot surfaces shall be insulated to a height of 7' above or 3' to each side of normal walking or working areas (including platforms and ladders). Personnel protection insulation shall not be continued beyond normal working areas. Alternatively, guards of expanded metal may be used if specified by Ethyl.

c. Valves, Flanges, & Fittings. Valves, flanges, and fittings, except unions, in steam and boiler feed water service shall be insulated. Valves, flanges, and flanged fittings in other services shall not be insulated except where required for personnel protection or special process reasons. Welded and screwed fittings, except unions, in insulated lines shall be insulated; expansion joints shall not be insulated.

d. Steam Traps. Steam traps shall not be insulated except for personnel protection. Inlet piping to steam traps shall be insulated. Discharge piping which returns to a condensate collection system shall be insulated. Piping which discharges to a drain shall not be insulated except for personnel protection.

e. Steam Tracing. Steam traced piping or equipment shall be covered with oversized insulation to include the tracer lines. Insulation thickness shall be selected from Table 1. Steam traced systems shall be completely insulated including equipment, valves, flanges, fittings, and tracer line loops.

f. Hydro Test. All equipment shall be pressure tested before the application of insulation.

g. Nameplates. Nameplates shall not be insulated. Insulation surrounding vessel

3 EQUIPMENT

3.1 MATERIAL

a. Small Cylindrical. Equipment to 1200F and 24" and less in diameter shall be insulated with calcium silicate or expanded perlite pipe covering; all products shall be asbestos free. Acceptable materials are

Calsilite, Calsilite 1200	Keene, Thermasil
Celotex, Careytemp 1500	Owens Corning, Kaylo 10
Johns Manville, Thermo 12	Pabco, Super Caltemp NA.

Other materials may be used with Ethyl Corporation approval. In periods of material shortage, equipment to 400F may be insulated with Pittsburg Corning Foamglas.

b. Large Cylindrical. Equipment to 1200F and larger than 24" in diameter shall be insulated with curved block or beveled lags of the type and brand name specified in Para a above.

c. Flat. Flat surfaces to 1200F shall be insulated with flat block of the type and brand name specified in Para 3.1a above.

d. Thickness. Insulation thickness shall be as specified in the Equipment List. Insulation thickness for equipment not shown in the Equipment List shall be per Table 1.

3.2 SECUREMENT. Bands for equipment insulation shall be 3/4" x 0.020" 18-8 stnls stl with 18-8 stnls stl seals, A. J. Gerrard or equal. 12" on centers.

3.3 WEATHERPROOFING

a. Vertical Jacket. Vertical straight shells shall be weatherproofed with 0.016" thick x 1 1/4" corrugated aluminum with factory attached moisture barrier.

b. Horizontal Jacket. Horizontal straight shells shall be weatherproofed with 0.016" thick smooth aluminum with factory attached moisture barrier.

c. Vertical Seams. Vertical seams in aluminum jacketing shall be secured with $\frac{1}{2}$" long x #8 stnls stl sheet metal screws on 6" centers.

d. Circumferential Seams. Circumferential seams in aluminum jacketing shall be secured with a 3/4" x 0.020" 18-8 stnls stl band at each stem. Continue to apply bands circumferentially on 18" centers.

e. Z Clips. Z support clips made from 3/4" x 0.020" stnls stl band shall be installed at the circumferential seams on 18" centers on vertical vessels.

f. Projections. At all projections (nozzles, brackets, etc) the necessary cutouts shall be carefully made and weatherproofed with heat resistant mastic, Foster 95-10 or approved equal up to 350F; above 350F use Eagle Picher Stalastic.

g. Heads. Heads shall be weatherproofed as detailed in Fig 6. Alternatively, if economical, available, and approved by Ethyl, a formed cover of 0.020" thick smooth aluminum with factory attached moisture barrier may be used.

3.4 DETAILS. Details of equipment insulation shall be as shown in Figures 5 through 12.

3.5 IRREGULAR SURFACES. Pumps, turbines, and other irregular surfaces shall be insulated and weatherproofed the same as vessel heads.

NOTE: Valves shall be insulated only in live steam and steam traced lines, and in lines operating over 600 F.

On valves 2" and smaller use insulating cement of proper thickness and finish as specified below.

On valves 2½" and larger use molded pipe insulation of proper size and thickness.

Over insulation apply a [illegible] thick coat of JM352 OR APVD EQ finish cement and weatherproof with Foster Gold 35-01 Al gray Sealfas (1 16" dry film thickness). On sizes 2" & larger reinforce the weatherproofing with a layer of Foster Mastercloth.

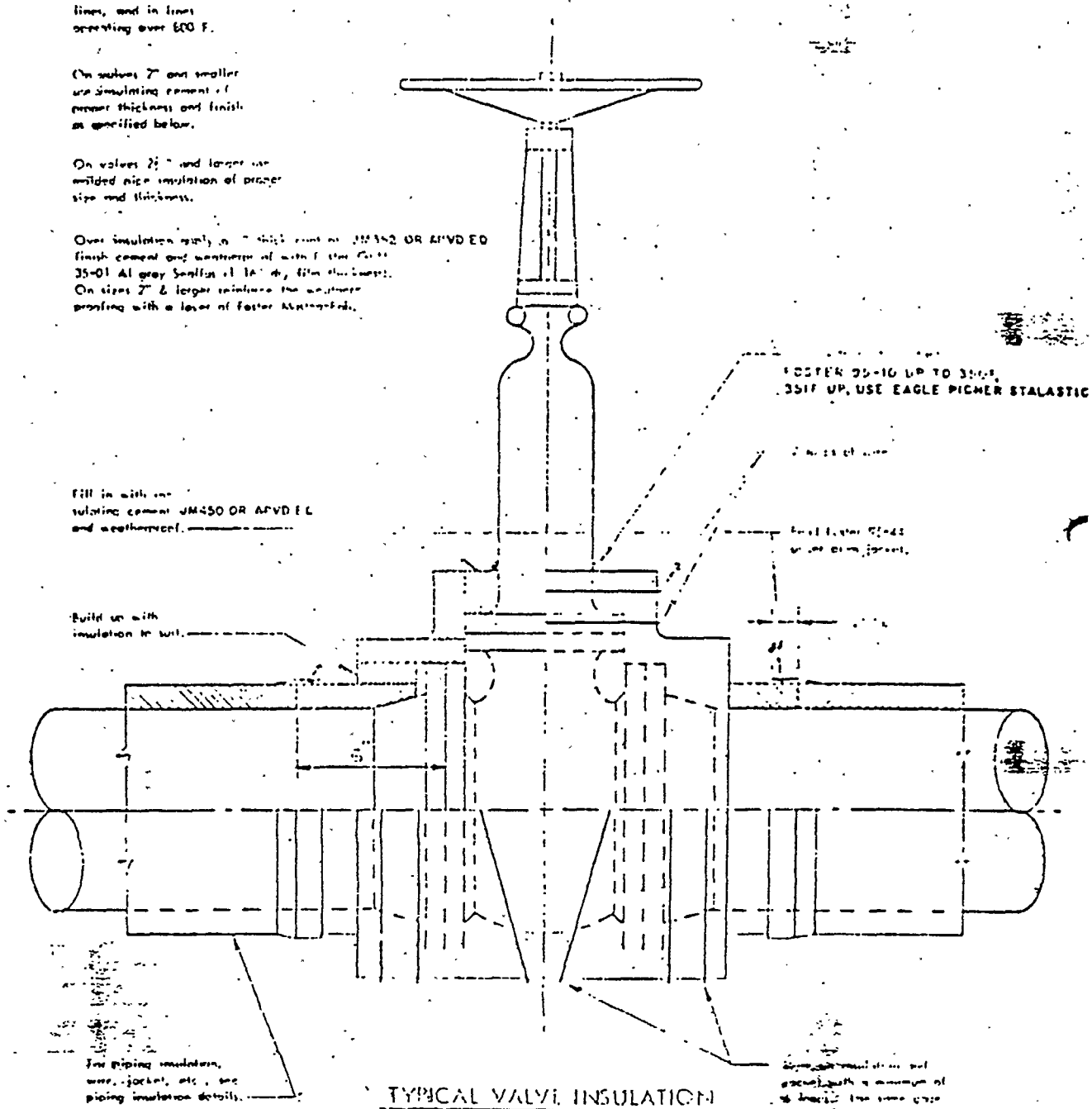

TYPICAL VALVE INSULATION

HOT SERVICE

FIG 4

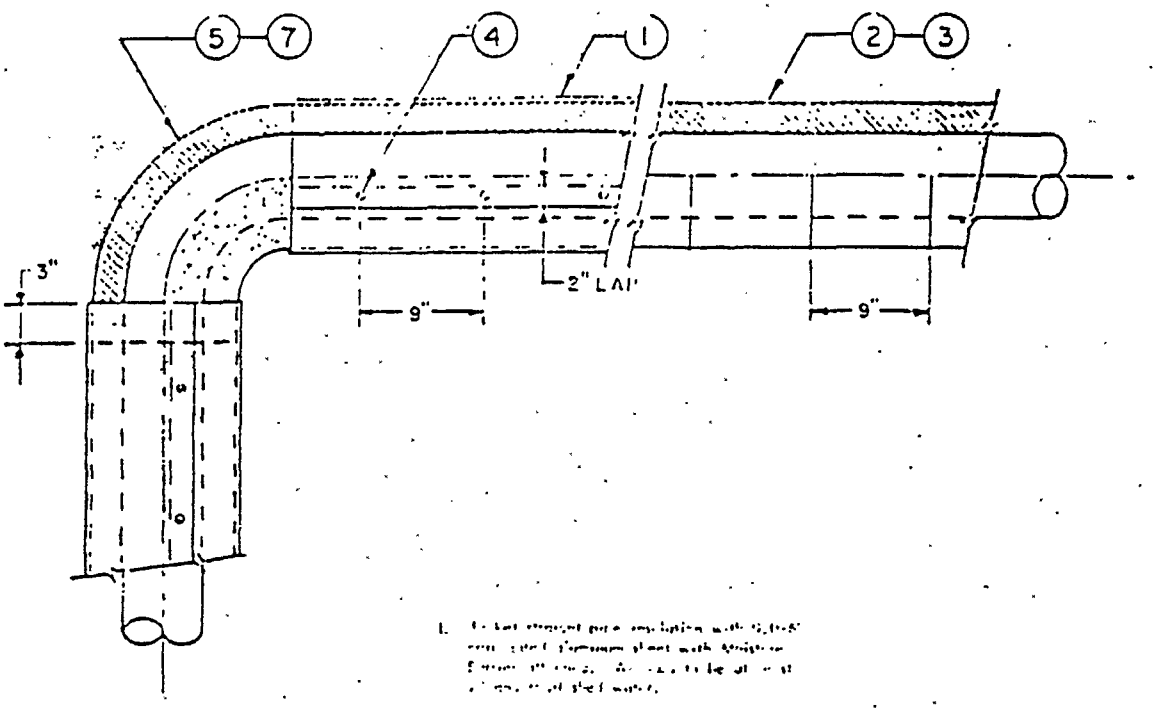

1. [illegible] pipe insulation with [illegible] steel jacketing sheet with [illegible] [illegible] of sheet metal.

2. Thickness of insulation in accordance with schedule.

3. [illegible] pipe covering with 16 ga. 16#t zinc [illegible] 12" & smaller, 14 ga. 16#t zinc on sizes 13" & larger.

4. SECURE JACKET W/ 1" LG X NO 8 STNLS STL SHEET METAL SCREWS ON 4" CENTERS.

5. FITTINGS SMALLER THAN 2" SHALL BE COVERED W/ INSUL CEMENT (DYNASOL OR ARVO 50) & WEATHERPROOFED W/ 47GPM MASTIC (FOSTER 35-01 ALUM GRAY OR ARVO 50) 1/16" DRY FILM THICKNESS. FITTINGS 2" & LARGER SHALL BE INSULATED W/ A MATERIAL COMPARABLE TO THE ADJACENT PIPE INSULATION & WEATHERPROOFED W/ 47GPM MASTIC 1/16" DRY FILM THICKNESS. THE MASTIC SHALL BE REINFORCED W/ BEN FOSTER MAST-A-FAB. PREFORMED ALUMINUM FITTING COVERS MAY BE USED IF ECONOMICAL & AVAILABLE.

6. [illegible] insulation shall be applied with [illegible] layers shall, and circumferential joints of each layer shall be staggered from [illegible] single layer. SEE PAR 2 &

7. [illegible] 47GPM 35-01 mastic to [illegible] 3" over jacket on vertical lines and 3" under jacket on horizontal lines.

TYPICAL PIPING INSULATION

HOT SERVICE

FIG 3

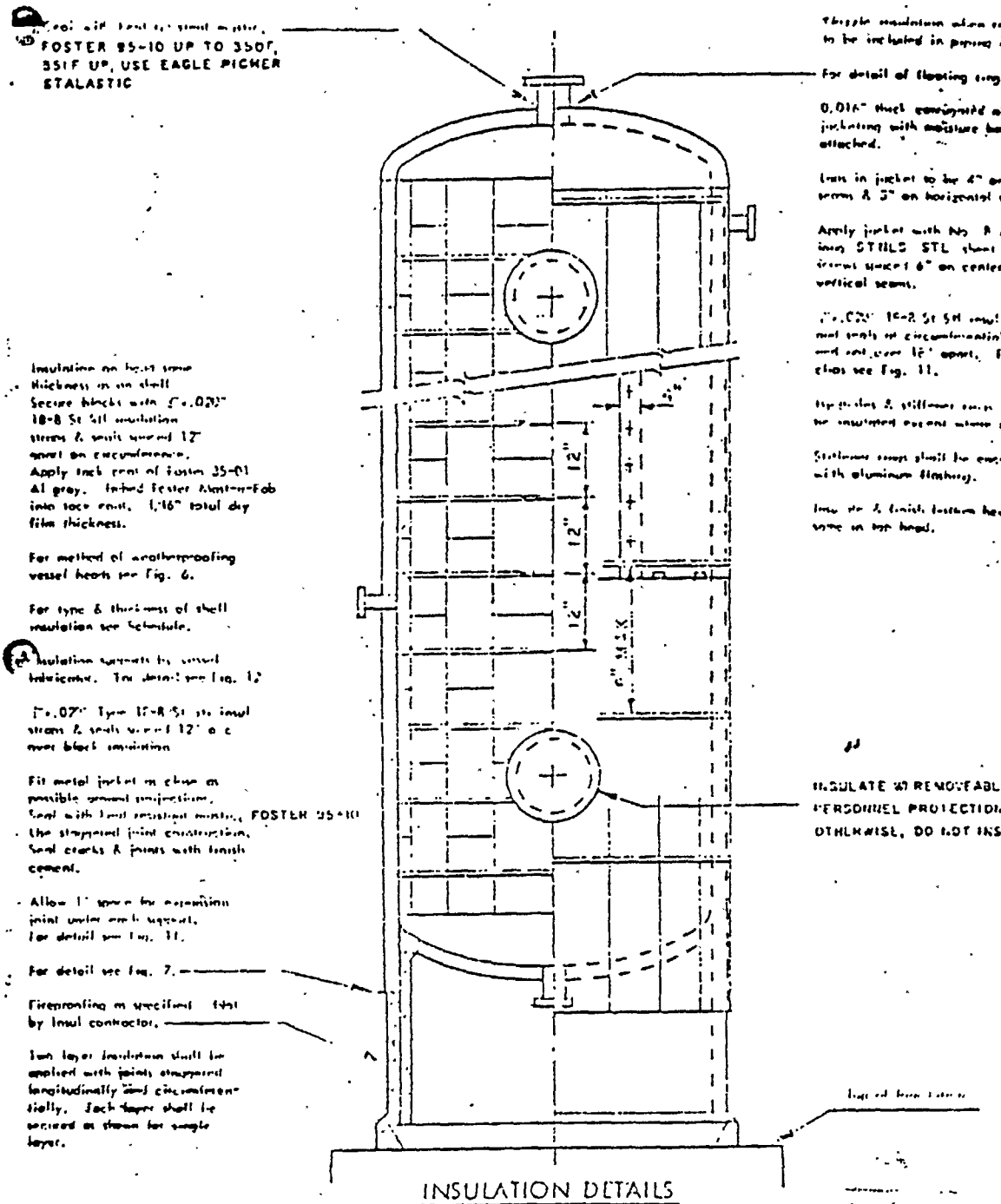

INSULATION DETAILS

VERTICAL VESSELS

HOT SERVICE

FIG 5

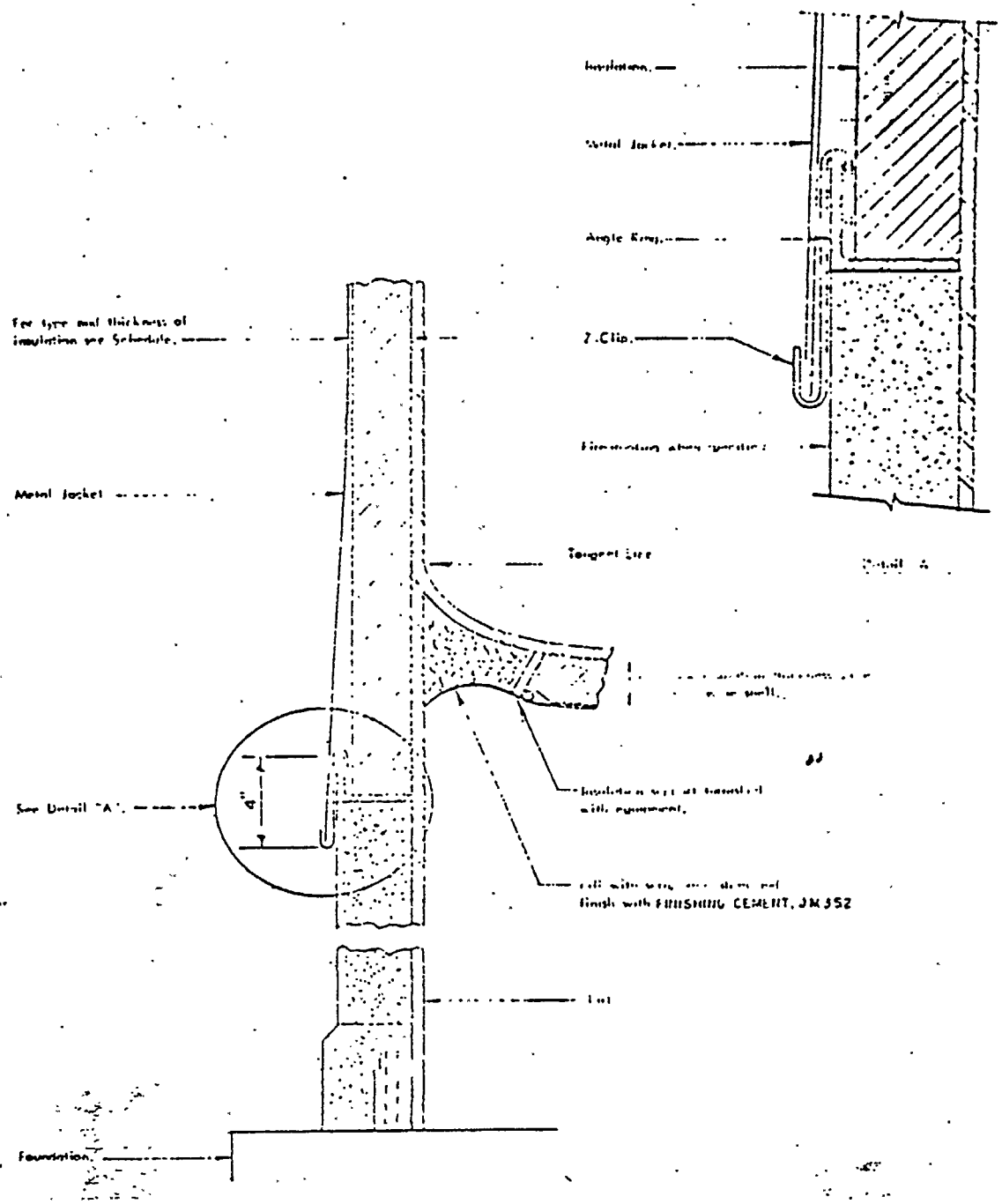

DETAIL AT SKIRT

FIG 7

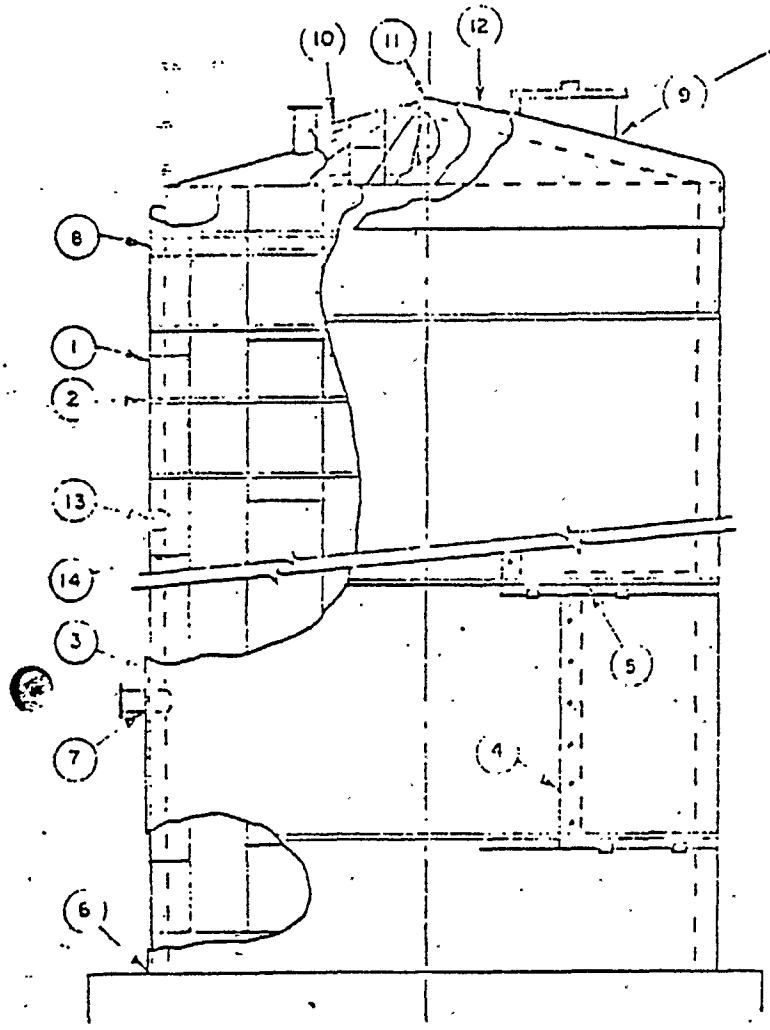

FOSTER 95-10 UP TO 350F, 351F UP, USE EAGLE PICHER STALASTIC

1. Block insulation. For type and thickness see schedule.
2. 3/4" x .020" 18-8 stainless steel insul straps and seals spaced 12" on centers over block insulation.
3. .016" thick corrugated aluminum jacket with moisture barrier.
4. Laps in jacket shall be 4" on vertical seams and 2" on horizontal seams using No. 8 x 1/2" long STNLS STL sheet metal screws 6" on centers on vertical seams.
5. 3/4" x .020" 18-8 stainless steel insul straps and seals at circumferential seams and [illegible] 16 [illegible] For 2 clips see Fig. 11.
6. Impervious first course such as Fuamgim or equal, sealed with Foster 95-44.
7. Fit metal jacket as close as possible around nozzles and projections. Seal with heat resistant mastic, Foster 95-10.
8. Use double straps at this point to secure [illegible] end of head straps.
9. Flash and seal ground projections and where roofing overlaps metal siding. Furnish floating rings where required to fasten insulation straps. For detail see Fig. [illegible]
10. Use 3" wide block on real same thickness as shell. Secure blocks with 3/4" x .020" 18-8 stainless steel insul straps and seals spaced 12" apart on circumference.
11. Trowel on a 3/8" thick coat of JM301 crushing cement filling all voids and cracks.
12. Prime surface with asphalt primer and weathered proof with 2 plies [illegible] 15 lb saturated felt and one layer of 15 lb asbestos felt roofing in asphalt mopping.
13. Allow 1" space for expansion joint under each support. For details see Fig. 11. Insul supports by tank fabricator.
14. Staggered joint construction shall be used. Two layer insulation shall be applied with joints staggered circumferentially and longitudinally. Each layer shall be secured as shown for single layer.

INSULATION DETAILS

HOT STORAGE TANKS

FIG 9

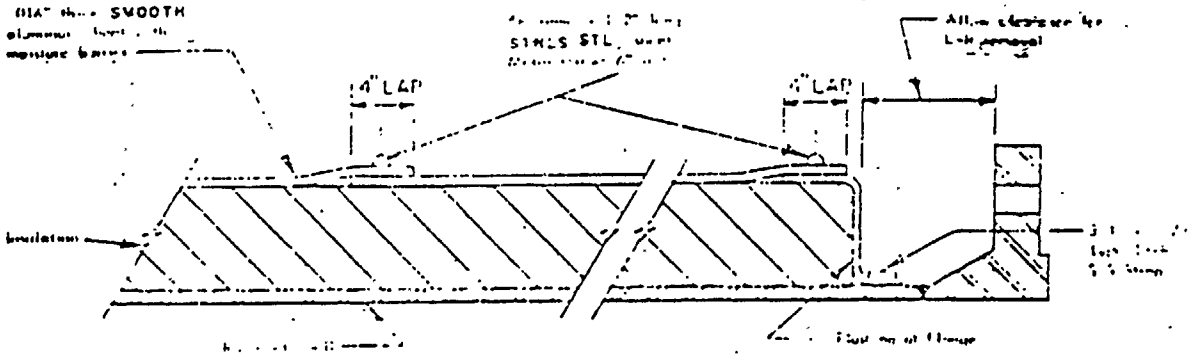

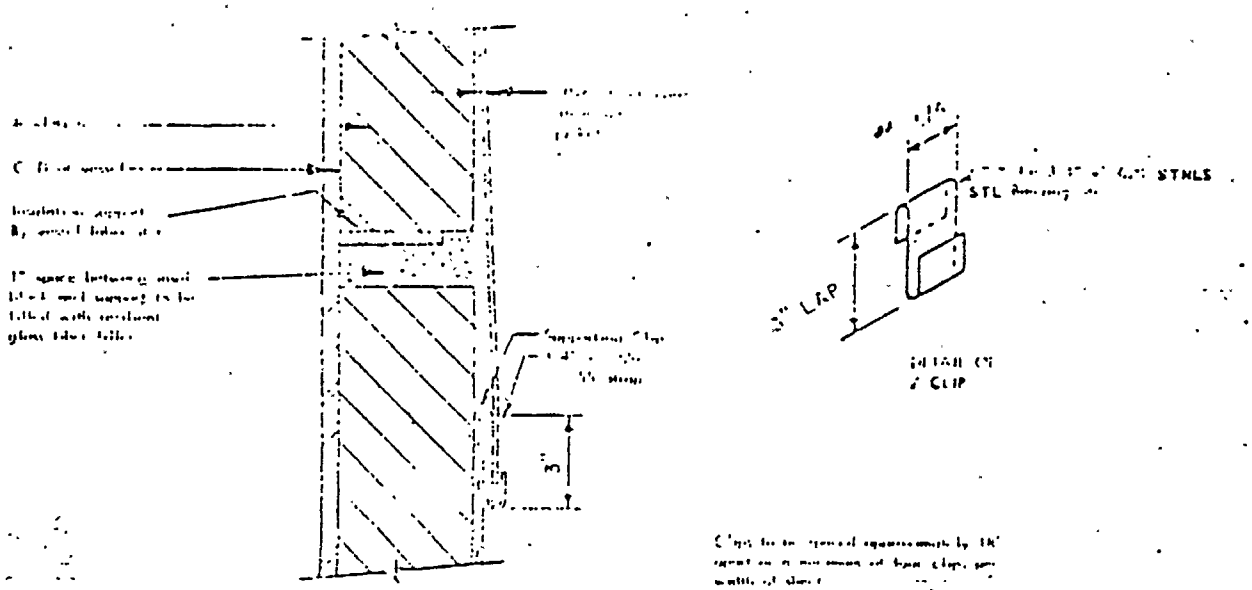

HORIZONTAL SEAM DETAILS

VERTICAL VESSELS

FIG. 11

ATTACHMENT #1

MATERIAL PRICES FOR COST PLUS WORK

I. Calcium Silicate or Expanded Perlite Insulation

A. Piping - Price per foot.

Pipe Size	Thickness 1"	1½"	2"
½	$1.11	$1.33	$2.13
3/4	1.13	1.38	2.21
1	1.14	1.46	2.34
1½	1.16	1.67	2.63
2	1.44	1.84	2.76
2½	1.53	2.01	2.96
3	1.61	2.09	3.18
4	1.88	2.44	3.77
6	2.19	2.83	4.82
8	N/A	3.83	5.75
10	N/A	5.10	7.20
12	N/A	6.00	8.02

B. Block - Price per square foot. (Flat)

Thickness	Price
1½"	$1.14
2	1.52
2½	1.90
3	2.30

C. Scored Block - Price per square foot.

Thickness	Price
1½"	$1.20
2	1.61
2½	2.00
3	2.40

II. Plain Fiberglas Insulation - Heavy Density

A. Piping - Price per foot.

Pipe Size	1"	1½"	2"
½"	$ .55	$1.16	$1.84
3/4	.61	1.20	1.92
1	.66	1.27	2.03
1½	.80	1.45	2.28
2	.87	1.59	2.40
2½	.98	1.74	2.57
3	1.08	1.81	2.76
4	1.42	2.07	3.19
6	1.74	2.40	3.70
8	2.52	3.10	4.59
10	2.99	3.73	5.50
12	3.45	4.25	6.20

ATTACHMENT #1

V. Accessories

A. Stainless Steel

1. Tie-wire @ $2.40/lb.
2. Banding
   a) ½" x .015 or .020 @ $1.35/lb.
   b) 3/4" x .015 or .020 @ $1.35/lb.
3. Seals
   a) ½" x .020 @ $21.30/M.
   b) 3/4" x .020 @ $27.06/M.
4. #8 x ½" Sheet Metal Screws @ $17.85/M.

B. Coatings, Adhesives, Sealants

1. PVA Mastic @ $7.02/Gal. (5-Gal. Pail)
2. Joint Sealer @ $10.50/Gal. (5-Gal. Pail)
3. Caulking @ $2.05/Tube (11 oz. Tube)

C. Miscellaneous

1. Glass Reinforcing Fabric (450 sq. ft.) @ $23.86
2. Thermon - Std. Grade (5-Gal. Pail) @ $18.35/Gal.

   TFK-4 Channels @ $1.50 Ea.
   TFK-7 Channels @ $2.00 Ea.

3. Insulation Cement (50# Bag) @ $7.09
4. Fiberglas Tape (1/8" x 2" x 100') @ $35.60