A

DRAFT

To: P. J. Kober

From: V. L. Thornhill/ V. E. Messick
Date: May 25, 1988

Interoffice Communication

Subject: 5305/5265 Capacity Expansion

VISTA

The key to expanding the 5305/5265 resin capacity by end of 1989 is whether the resin can be made in the small reactors. PED is presently studying the small reactor relieving systems and the reactor vessel pressure limitations. However they need direction from the plant on what constitutes safe operating conditions (pressure/temperature) for the resins. The purpose of this letter is to get agreement on the plant's position on this matter.

There are two basic issues that are in question here. First is the matter of runaway reactions and second is the situation of premature rupture disc failures. Each of these will be discussed below.

In June, 1987 an IOC by V. E. Messick stated the reactor emergency kill guidelines for all products. The guidelines were based on a 30 psi minimum difference between the lowest relief valve setting and the emergency kill limit for the small reactors. For the small reactors the settings for 5305/5265 are 155 psig and 153°F. The current operating conditions for 5305/5265 resin are 149-152 psig and 150-152°F. Production in these reactors will require higher limits.

Relief valve discharges resulting from premature rupture disc failure is a serious concern. Several things have been done to minimize this risk. First, we implemented a comprehensive testing and inspection plan for each disc. Each disc is tested to 90% of its burst pressure by the manufacturer. The discs are visually inspected by a plant person before being placed in plant stock. The maintenance force has been trained in the proper installation procedures and these are followed. Each disc is tested to 90% of its burst pressure after installation on the reactor before the reactor is placed back in service.

Second, since 1983 production of 5305/5265 resin was limited to the large reactors. This action stemed from discharges on reactor 744 in 1982 and 1983. The thinking being the greater pressure difference between the rupture disc setting and the reactor's operating pressure, the less susceptible we are to premature disc failures which would result in a relief valve discharge.

Third has been our extensive work on relief valve blowdown ring setting. We have had three relief valve discharges due to disc failures since 1979 (the last one in 1983). For more information, see attached description. Our research shows that all three discharges occurred on relief valves with improper blowdown ring settings. The two that occurred on reactor 744 in 1982 and 1983 had a valve with ring setting of 9 notches. The discharge on reactor 300 in 1979 had a valve ring setting of 3 notches. Eighteen (18) notches would be a normal setting. Testing in 1984 and 1986 on our relief valves with air showed the optimum blowdown ring settings should be 30-38 notches. The new settings require a higher initial force to lift the relief valve off its seat. The higher settings do not affect the valves' capacity or its ability to relief at the proper pressure. All our reactor relief valves have been set with the proper ring settings. This greatly reduces the chance of a premature disc failure causing a relief valve discharge.

Therefore, we recommend the following guidelines for PED's study:

1. The 30 psi difference between the lowest relief valve setting and the emergency kill setting be maintained.

2. The emergency kill settings for 5305/5265 for the reactors cannot be set below 165 psig and 162°F.

3. New temperature instrumentation identical to the systems on reactor 700 and 745 be installed on the small reactor(s) making low molecular weight resin.

These recommendations differ with previous plant philosophy. Presently the definition of a runaway is 10°F or 20 psi above setpoint. Recommendation No. 2 would deviate from this -- 15 psi

for a small reactor. The deviation is to the conservative side and discussions with the panel operators did not indicate the range as a cause for premature termination of a batch. The items they pointed out were: (1) The new style temperature instrumentation provides a tighter degree of control and less overshoot and (2) A batch running 8 - 10 psi above setpoint would already have been "bumped" with the normal kill solution. Also the gains accomplished from the change in the blowdown ring settings overshadows potential risk from reducing the pressure difference between the operating conditions and rupture disc (from 60 to 40 psi). I believe this is supported by our performance since the blowdown ring settings have been made. There are still a few pre-mature disc failures each year but without a relief valve discharge.

Please review these recommendations and return any comments to me. If you approve, this letter will be sent to E. J. Meyer.

V. L. Thornhill, Jr.
V. L. Thornhill, Jr.
Process Engineer

William E. Messick
V. E. Messick
Chief Process Engineer

slh

cc; RWS, DFJ, TFL, DAM, RAF, DCS, DLC, JCL

ATTACHMENT

CONFIDE

The rated burst pressure for the lot was 189 psig but the selected disc burst prematurely at 164 psig. The other four discs with deep scratches were then tested successfully at BS&B up to 90% of the rated pressure. The decision was then made to use this lot of discs to evaluate the effect of various types of damage to the discs on disc burst pressure. These tests were run at BS&B in August 1982. The conclusion from these tests was that damage to the top of dome is much more serious than damage at the outer radius. Scratches and small nicks did not seem to have any effect on burst pressure. Details on the tests are contained in a letter from Cindy Ziobro dated September 27, 1982 which is attached as reference B-28, Appendix B. BS&B suggested in a letter dated September 9, 1982 that a scratch depth over 50% of the disc thickness should be one of the criteria for disc rejection. This letter is attached as reference B-29, Appendix B. Because of the difficulty which the plant has experienced in measuring scratch depth, the plant rejects any disc that has a scratch or indentation that can be felt on the other side of the disc.

To reduce the possibility of leaks, the reactors are hydrotested to 90% of the pressure rating of the lowest rated disc each time that one of the major flanges on the reactor has been unbolted for any reason. There has been some concern that a rupture disc might be damaged during this hydrotest if the reactor became liquid full or if the test pressure were allowed to rise too rapidly. A revised procedure was thus established for pressure checking reactors after opening to reduce the possibility of damaging a disc during the hydrotest. This procedure included witnessing of all hydrotests by a process engineer or operations supervisor. A copy of this procedure dated August 2, 1982, is attached as reference B-30, Appendix B. The procedure was also documented in a memo dated November 15, 1982, which is attached as reference B-31, Appendix B. This memo set up a pressure check logbook.

ADDITIONAL DETAILS ON CORRECTIVE STEPS TAKEN AFTER THE JANUARY 8, 1983 RELEASE

Standard rupture disc ordering criteria were established in a letter dated August 3, 1983, which is attached as reference B-32, Appendix B. These criteria were written after extensive discussions within Conoco and with BS&B to ensure that uniform high quality rupture discs would be purchased and installed on the PVC reactors. Most of the items specified are not new. The most significant new items are a requirement that the discs be ASME code stamped and that they be tested to 90% the rated burst pressure before shipping.

The long blowdown of the D-744 relief valve on January 8, 1983 after relieving at 19% below its set pressure because of the premature rupture disc failure raised serious questions about the reason why the valve did not reseat quickly. The plant discussed this problem extensively with Farris who manufactured the valve and found that there were several possible reasons why this could happen. The most likely reason being that the relief valve blowdown ring was set too close to the valve disc holder. This is called a high blowdown ring setting but it represents a low number of notches on the blowdown ring. The position of the blowdown ring is set by counting the number of notches away from the disc holder. The plant then decided to run a series of tests in one of the reactors using air.

VAB.0001104726

These tests were run in May 1984 and a Farris representative participated. The tests evaluated the effect of the blowdown ring setting on the reseating pressure of the valve. The amount of relief valve opening when a rupture disc beneath the valve was burst below the valve set pressure was also investigated. From the results of these tests, it was concluded that the possibility of a VCM release would be reduced if the blowdown rings were set further away from the disc holder. This change was completed in October 1984 when all of the blowdown rings were set at 30 notches which is almost double the normal 18 notches. This change was documented in a plant memorandum dated October 29, 1984 which is attached as reference B-33, Appendix B.

A discussion of how the blowdown ring affects safety relief valve operation will help to show why this change in blowdown ring setting will reduce the likelihood of VCM relief valve emissions. A diagram of the Farris 2600 safety relief valve which is used on most of the plant reactors is reproduced from the Farris catalog on the following page. An understanding of how the blowdown ring controls the relief valve reseating pressure at blowdown can be obtained by referring to the diagram. As the pressure increases in the protected vessel, the force against the disc begins to overcome the spring pressure. The disc then lifts slightly which allows some leakage past the valve O-ring seal into the huddling chamber. Leakage out of the huddling chamber (simmer) is controlled by the clearance between the blowdown ring and the disc holder. A setting of the blowdown ring close to the disc holder will thus reduce the clearance and the leakage rate out of the huddling chamber. When the leakage rate into the huddling chamber becomes greater than the leakage rate out then pressure will buildup in the huddling chamber. Pressure in the huddling chamber will lift the disc holder. The force on the disc holder added to the force on the disc overcomes the closing force of the spring and causes the valve to open quickly in the characteristic pop action. After the valve opens, it is kept open by the kinetic energy of the flowing gas as it changes direction in the huddling chamber. A gas flow of 25% or more of valve capacity is generally required to keep the valve open. When the relieving pressure drops below the valve set pressure, the spring force is able to overcome this kinetic energy and close the valve. However, if the blowdown ring is set close to the disc holder, pressure will again build in the huddling chamber as the disc holder approaches the blowdown ring and the force against the disc holder will prevent the valve from closing. Increasing the blowdown ring setting to a higher number of notches will increase the clearance between the blowdown ring and the disc holder and thus reduce the huddling chamber pressure and the force on the disc holder. This allows the spring to close the valve at a higher pressure. By positioning the blowdown ring further away from the disc holder, it should also be more difficult for the shock wave from a premature rupture disc failure to pop open the valve. This was confirmed by the plant tests. Thus a consideration of both the way the reactor safety relief valves are designed to operate and the results of the tests that were conducted leads to the conclusion that the new blowdown ring settings should reduce the possibility of VCM releases. Training in the changes that were to be made in the blowdown ring settings was provided to the plant engineers on July 13, 1984 which is documented in reference B-34, Appendix B.

Teledyne Farris Safety-Relief Valves | Steel / Flanged

CONFIDENTIAL

2600 Series

Farris "O" Ring Seat Pressure Seal for Conventional or BalanSeal

Minimizes leakage and costly product loss as well as costly down time and maintenance on troublesome applications such as:

- Operation too close to set pressure.
- Light, hard to hold fluids.
- Entrained foreign particles and solids.
- Vibratory applications.
- Corrosive fluids.
- Nozzle icing conditions.
- Discharge piping strains.

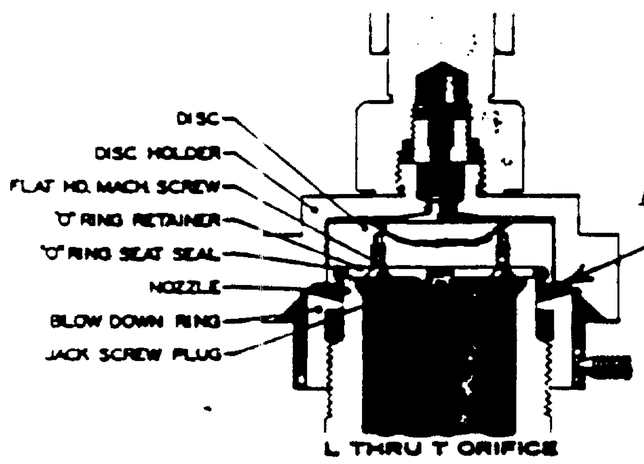

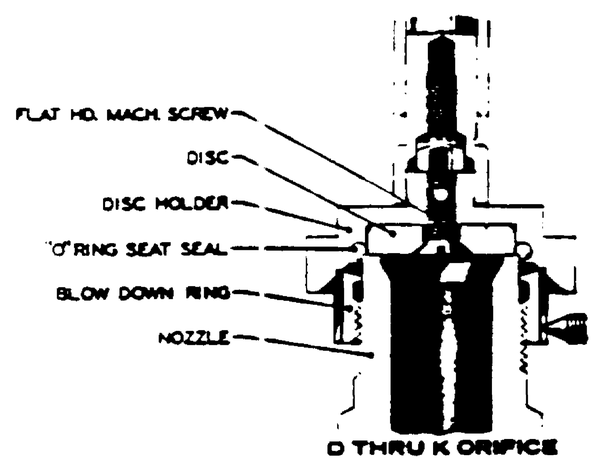

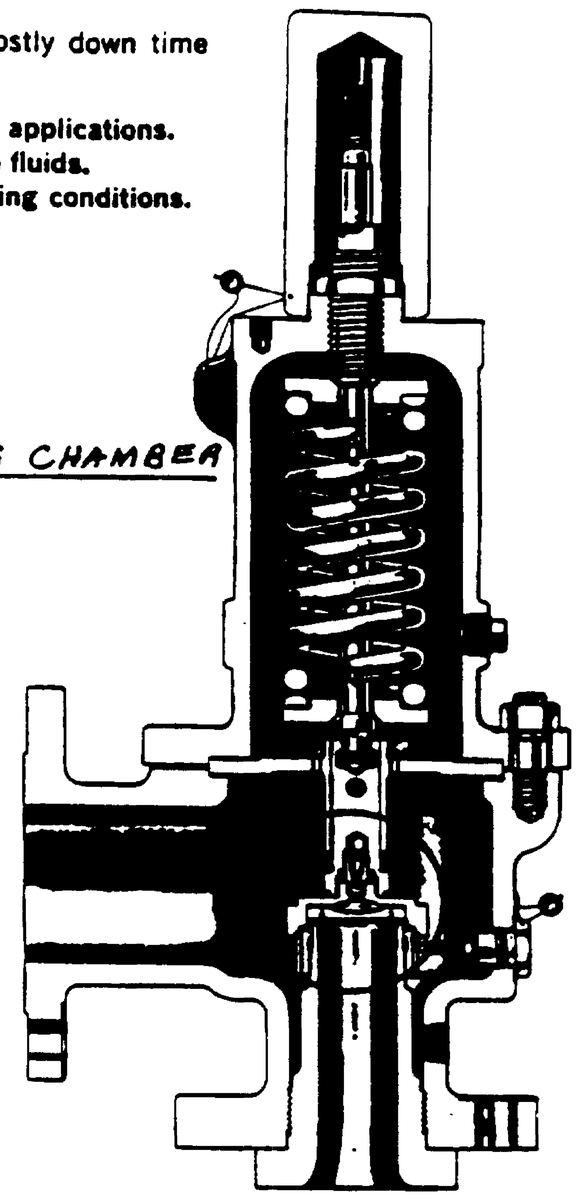

Recognizing the need for a resilient seat in a safety-relief valve for extreme tightness, Teledyne Farris Engineering first made available an "O" Ring seat seal in early 1950. Although limited in pressure, the "O" Ring design received phenomenal acceptance since it made possible complete tightness at pressures much closer to the valve set pressure than was ever possible with the standard metal to metal seats after service.

The present "O" Ring Seat Pressure Seal design is an improvement which allows the use of the "O" Ring Seat Seal to higher pressures and, equally important, the spring load is solely carried by the metal to metal portion of the seat with the "O" Ring becoming a pressure seal within its recessed chamber and the outer edge of the nozzle, assuring the ultimate in tightness.

The "O" Ring Seat Pressure Seal is available in our 2600 Series line of flanged safety-relief valves — conventional or BalanSeal construction — for pressures up to a maximum of 1500 PSIG.

Referring to the selection tables on pages 2.12 thru 2.39, substitute a "C" for the fourth digit "A" in the type number for the conventional valve and a "D" for the fourth digit "B" in the type number for the BalanSeal construction when an "O" Ring Seat Seal is required:

26FA10 becomes 26FC10 (Conventional)
26FB10 becomes 26FD10 (BalanSeal)

The pressure limit of the Conventional or BalanSeal valves covered in the selection tables is the same for the "O" Ring design in all type numbers and orifices with the 150 lb., 300 lb. and 600 lb. inlet flanges. On the "O" Ring design in all type numbers and orifices, 1500 lbs. is the limit for the "O" Ring design, not the conventional valve limit shown in the selection tables & charts. Refer to "O" Ring Material Selection Chart on page 2.11 for Temperature and Pressure ratings of the various elastomeric "O" Ring materials available.

VAB.0001104728