Aug. 23, 1955 H. R. BILLETER 2,715,799

GRINDING DEVICE

Filed Aug. 19, 1950 4 Sheets-Sheet 1

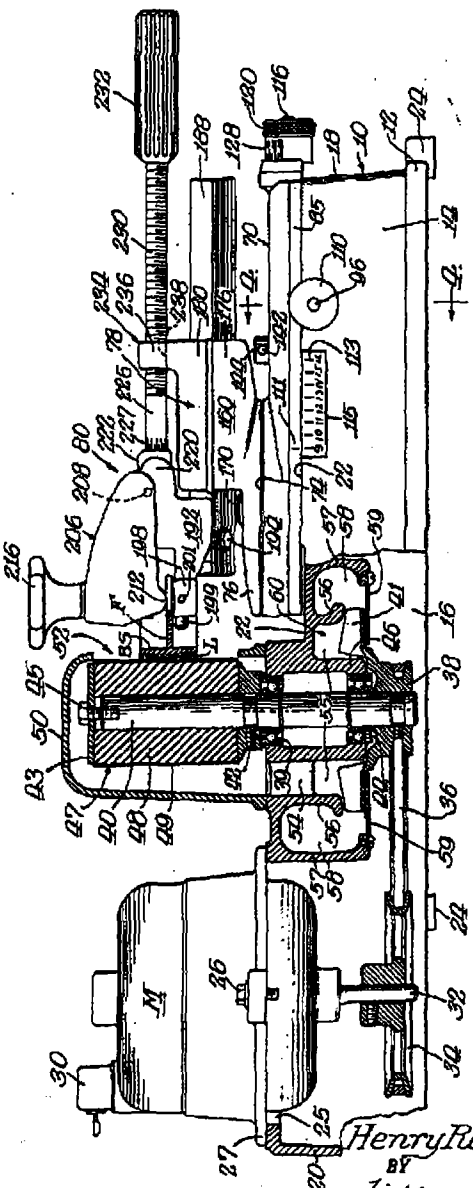

Fig. 1.

INVENTOR.
Henry Robert Billeter,
BY
Fidler, Crowell & Beardsley
Attys.

EXHIBIT
#2 - MR. MOUNTZ
9-17-08 CCH

Aug. 23, 1955 H. R. BILLETER 2,715,799

GRINDING DEVICE

Filed Aug. 19, 1950 4 Sheets-Sheet 2

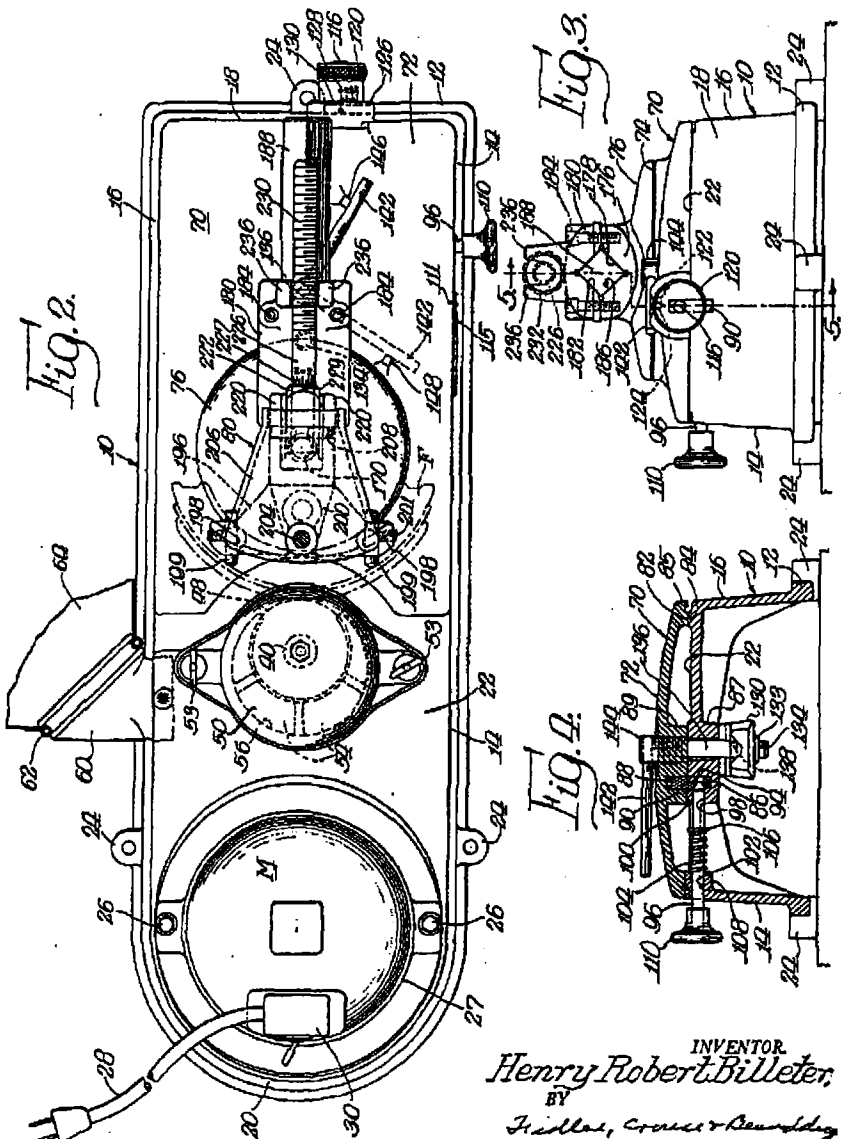

INVENTOR.
Henry Robert Billeter,
BY
Fidler, Crouse & Beardsley
Attys.

Aug. 23, 1955 H. R. BILLETER 2,715,799

GRINDING DEVICE

Filed Aug. 19, 1950 4 Sheets-Sheet 3

Fig. 5.

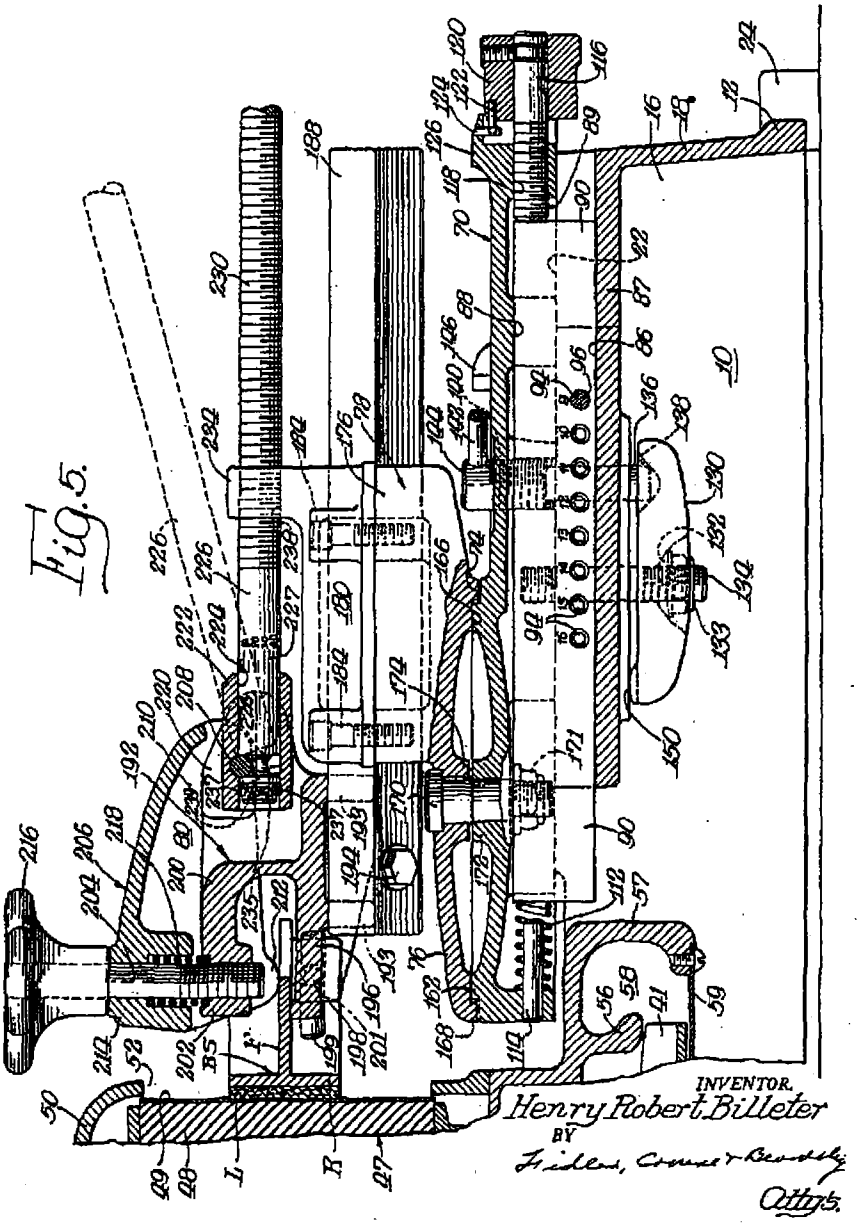

INVENTOR.
Henry Robert Billeter
BY
Fidler, Connor & Cassidy
Attys.

Aug. 23, 1955 H. R. BILLETER 2,715,799

GRINDING DEVICE

Filed Aug. 19, 1950 4 Sheets-Sheet 4

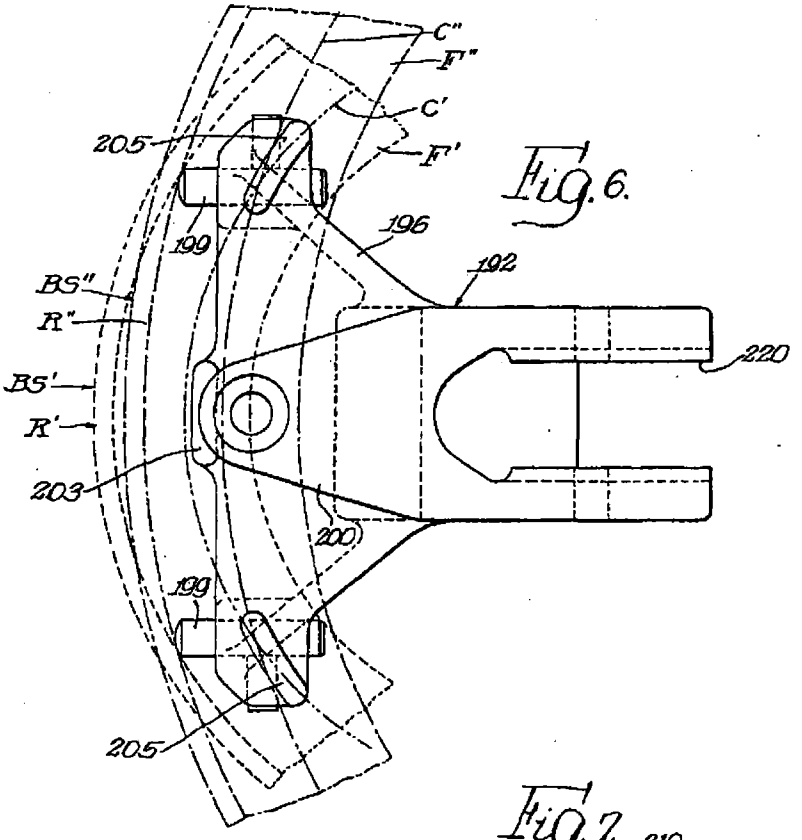

Fig. 6.

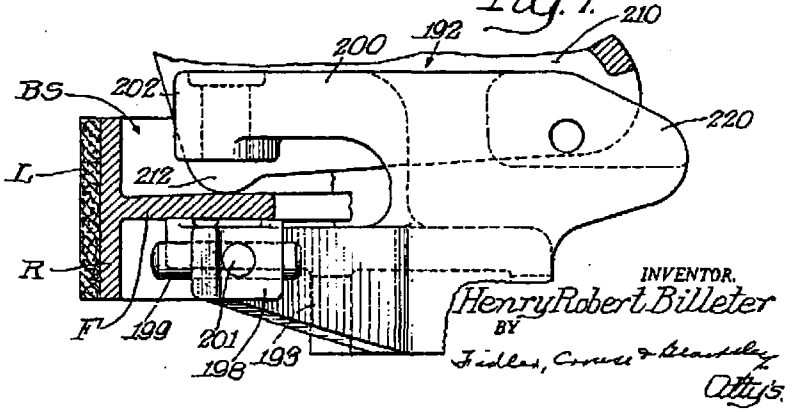

Fig. 7.

INVENTOR.
Henry Robert Billeter
BY
Fidler, Cowie & Beardsley
Attys.

United States Patent Office 2,715,799 Patented Aug. 23, 1955

2,715,799

GRINDING DEVICE

Henry Robert Billeter, Highland Park, Ill., assignor to Ammco Tools, Inc., North Chicago, Ill., a corporation of Illinois

Application August 19, 1950, Serial No. 180,425

14 Claims. (Cl. 51—96)

The present invention relates to a grinding device and more particularly to a device for grinding arcuate contours and especially well adapted for dressing down the exposed arcuate surfaces of automotive brake shoe linings to produce a true cylindrical face of proper radius to fit the brake drum with which the brake shoe is to be used.

In processing lined automotive brake shoes it is usually necessary to dress down a new lining so that the radius of curvature is the same as that of the brake drum with which the brake shoe is to be used in order that the entire braking surface of the shoe will engage the brake drum when the brakes are applied. When a brake drum becomes worn, it is usually bored out to insure that its braking surface is truly cylindrical and as a result its radius is greater than the radius of the brake shoe with which it is associated. When an oversize brake lining is applied to such brake shoe it is usually necessary to dress down the surface of the brake lining until its exposed curved surface is truly cylindrical, if it was not theretofore cylindrical and of a proper radius to accurately fit the inside surface of the brake drum.

An object of the present invention is to provide a grinding device wherein a carriage for pivotally supporting a holder for the article to be ground is adjustable linearly toward and away from a grinding element selectively into any one of a plurality of spaced predetermined positions for quick, approximate adjustment of the pivot axis of the article-holder relative to the grinding element and the carriage is further adjustable linearly toward and away from the grinding element through an infinitely variable adjustment from any one of said predetermined positions for exact adjustment of the position of the pivot axis relatively to the grinding element.

Another object is to provide a grinding device wherein a carriage for pivotally supporting a holder for the article to be ground is adjustable toward and away from a grinding element and may be firmly and rigidly secured in any position of adjustment in such manner as to insure that the pivot axis of the article-holder remains fixed in the position to which the carriage is adjusted, and no strain is imposed upon the adjusting mechanism during the grinding operation.

A further object is the provision in a grinding device of the type having a carriage slidable on a base and pivotally mounting a holder for an article to be ground of an indexing mechanism for positioning the carriage in any one of a plurality of spaced predetermined positions having an element thereof which serves also as a guide element for guiding the carriage for movement on the base.

Another object is the provision in a grinding device of the type wherein a holder for the article to be ground is pivotally mounted for oscillatory movement about a pivot axis adjustably fixed relatively to a grinding element, of a feed mechanism by which the holder may be rapidly advanced to bring the article into grinding relation with the grinding element and by a very simple manipulation secured in such advanced position and accurately advanced therefrom, which holder by another very simple operation may be rapidly retracted from any position into which it has been advanced.

A further object is to provide in a grinding device a holder for holding the article in proper grinding relation to a grinding element, of such construction and arrangement that an article to be ground may be quickly and easily inserted in the holder and firmly secured accurately in proper position, without requiring any aligning or positioning operations other than inserting the article properly in the holder and clamping it therein.

Still another object of the invention is to provide a brake shoe grinding apparatus in which the various parts which move frictionally upon one another are substantially enclosed and protected from the comminuted products of abrasion thereby materially lengthening the life of these moving parts.

An additional object is to provide a grinding device of the general type described wherein the indexing and adjusting mechanism for presetting the device for accurately forming a contour of predetermined radius may be readily calibrated by a simple adjustment of certain of the parts.

Another object is to provide a brake shoe grinder of the pivoted carriage type wherein the ends of the brake lining may be beveled by a simple manipulation of the operating handle of the device and without changing the setting of the pivoted carriage.

Still a further object is to provide a brake shoe grinder having a holder for the brake shoe to be ground which is so constructed and arranged that it will accommodate any brake shoe within the usual range of sizes and will hold the brake shoe with the surface of the lining closely parallel to the surface of the grinder, thus assuring accurate dressing down of the surface of the lining.

Other objects are to provide an apparatus of the character briefly outlined above which is simple in construction and possessed of a minimum number of moving parts and consequently unlikely to get out of order; rugged and durable and therefore possessed of a long life; may be manufactured at a comparatively small cost; simple and speedy in action; clean in its operation; and having its abrasive element so arranged that it may be quickly and easily removed and replaced.

Other objects and advantages will appear from the following description and the appended drawings wherein:

Figure 1 is a side elevational view of a brake shoe grinding apparatus constructed in accordance with the principles of the present invention, certain of the parts being shown as broken away and others sectioned to more clearly reveal the nature of the invention;

Fig. 2 is a top plan view of the apparatus;

Fig. 3 is a front elevational view thereof;

Fig. 4 is a fragmentary sectional view taken substantially along the line 4—4 of Figure 1;

Fig. 5 is an enlarged, fragmentary sectional view taken substantially along the line 5—5 of Fig. 3;

Fig. 6 is a top plan view of the lower brake shoe clamp, with broken lines showing somewhat diagrammatically the relative positions taken by two brake shoes of different sizes when in position in the clamp; and

Fig. 7 is a side elevational view of the lower brake shoe clamp and showing also a portion of the upper clamp and somewhat diagrammatically a brake shoe in position in the clamps.

The grinding device of the present invention is especially well adapted for grinding to true cylindrical contour the surfaces of linings attached to automotive brake shoes and the device is described herein in connection with such use for the purpose of illustration. It will be understood that the invention is not thus limited and that the principles may be applied to other uses where generally similar results are desired.

Referring now to the drawings in detail and in particular to Fig. 1, the grinding device includes a base

or frame 10 in the form of an elongated rectilinear casing-like member having a base flange 12 extending thereabout from which there extends upwardly and inwardly, preferably at a slight taper, a pair of side walls 14 and 16, a front wall 18 and a curved rear wall 20. The top wall 22 of the structure constitutes a bed plate upon which is mounted the principal operating elements of the apparatus. The flange 12 is formed with a plurality of supporting feet or pads 24 by means of which the base 10 may be secured to a supporting surface such as a work bench, with the flange 12 slightly elevated from the surface thereof to permit circulation of air beneath the apparatus for purposes that will become apparent presently.

Supported within an opening 25 (Fig. 1) formed in the top wall of the base 10 is an electric motor M which is suitably secured to the base as by means of a mounting bracket 27 and bolts 26. Current may be supplied to the motor by means of a cable 28 and a conventional switch assembly 30 is provided to control the motor circuit. The motor M serves to drive a grinder 47 of suitable form adapted to dress down the surface of a brake shoe lining and hence is provided with a shaft 32 which projects downwardly in the base 10 and carries a driving pulley 34 thereon operatively connected by a driving belt 36 to a driven pulley 38 mounted on a vertically extending shaft 40 which projects through an opening 39 in the bed plate 22 of the base 10. The shaft 40 is mounted in upper and lower antifriction bearings 42 and 44 respectively, carried in a boss 46 formed in the bed plate. The shaft 40 projects upwardly above the bed plate and detachably carries at its upper end a grinding element which preferably takes the form of a cylindrical grinding wheel 48 having a suitable abrasive surface 49.

The grinding wheel 48 preferably is formed as an expansible arbor carrying an abrasive element, and more particularly takes the form of an arbor of suitable material such as rubber or synthetic rubber detachably carrying an abrasive sleeve. An end plate 43 is secured to the shaft or spindle 40 by a bolt 45, which latter may be tightened to cause the end plate to compress the arbor lengthwise and expand it into tight engagement with the sleeve, whereby the tightness of the sleeve is thus readily adjustable. This construction also permits ready removal and replacement of the sleeve, should it become unserviceable or should substitution of another sleeve be found otherwise desirable.

A hood 50 having an open front 52 is removably secured to the base 10 as by means of wing fastening studs 53 (Fig. 2) and substantially encloses the wheel 48. The interior of the hood 50 communicates through a series of openings 54 with the interior of an annular suction chamber 55 surrounding the boss 46 beneath the bed plate 22 and defined between the boss 46 and a depending circular flange 56 integral with the bed plate. A second circular flange 57 formed on the bed plate 22 depends therefrom and surrounds the circular flange 56 to define therewith an annular dust-collecting chamber 58. A ring-like cover plate 59 is removably secured to the flange 56 and encompasses the driven pulley 38 in semi-sealing relationship with respect thereto and serves as a closure for the dust-collecting chamber 58.

The driven pulley 38 is provided with a plurality of spaced, radially extending blades 41 which are disposed in the chamber 55 whereby the pulley 38 functions in the manner of a fan or impeller to draw air and the comminuted products of abrasion from the hood 50 into suction chamber 55 and to expel the same by the action of centrifugal force into the dust-collecting chamber 58. The chamber 58 communicates with an elbow device 60 (Fig. 2) which projects through the side wall 16 of the base and to which there is removably attached by means of a garter spring 62 a dust-impervious but porous dust-collecting bag 64.

Referring now to Figs. 4 and 5, a carriage 70 is slidably disposed on the upper surface of the bed plate 22 for adjustable movement toward and away from the grinder 47. The carriage 70 is formed with an arcuate upper surface 72 (Fig. 4) of relatively long radius of curvature, which surface is formed with a flat circular turntable bed or supporting surface 74 (Figs. 1 and 5) on which there is rotatably disposed a circular turntable 76 forming part of a pivoted carriage 78 adapted to support a brake shoe holder 80. The carriage 78 pivots about a pivot axis established by a pivot pin 170 as explained more in detail hereinafter.

The carriage 70 is provided with downwardly extending slide rails 82 (Fig. 4) which rest upon slide rails 84 which project upwardly from and extend longitudinally of the bed plate 22. A continuous marginal flange 85 overlies the edge of the top wall 22 and serves to protect the rails 82 and 84 against the accumulation of the products of abrasion.

The bed plate 22 is formed with an integral, longitudinally extending, depending rib 87 having a longitudinal groove 86 formed in its upper surface, and the carriage 70 is formed with a longitudinally extending, depending rib 89 having a longitudinal groove 88 formed in its lower surface and in register with the groove 86. An indexing bar 90 which is rectangular in cross section is slidably disposed in and enclosed within the grooves 86 and 88 and serves in the manner of a key or guide rail to align the carriage 70 on the bed plate 22 in proper cooperating relationship with respect thereto, while at the same time permitting longitudinal adjusting movement of the carriage 70 on the bed plate 22 in a direction toward and away from the grinder. The indexing bar 90 constitutes the sole means for guiding the carriage 70 against lateral displacement on the bed plate 22. It also serves as an element of the indexing means hereinafter described for selectively positioning the carriage 70 in any one of a plurality of spaced, predetermined positions on the base 10.

The indexing bar 90 has formed therein a series of longitudinally spaced, aligned openings or index holes 94, each of which is tapered at one end and adapted to be selectively brought into register with the inner end of an indexing or locking pin 96 which is slidably disposed in a bore 98 formed in the rib 89 and opening into the groove 86 and in a bore 102 formed in a side wall 14 of the base 10. A coil spring 104 surrounding the pin 96 bears at one end against a washer 106 carried by the pin and at the other end against an internal boss 108 to yieldingly urge the pin inwardly of the base so that the inner end thereof may enter and is yieldingly held in a selected opening 94 in the guide bar. A handle or knob 110 is provided on the outer end of the locking pin 96 to facilitate manipulation of the latter. In order that the operator may determine which index hole 94 is in register with the end of the locking pin 96, a reference mark 111 (Fig. 1) is provided on the carriage 70 and cooperates with an index scale 113 which, for convenience, may be provided on the machine name plate 115 which may be attached to the side wall 14.

The carriage 70 is operatively connected to the indexing bar 90 so that it is maintained in adjusted position on the base 10 as determined by the position of the indexing bar 90. To this end the indexing bar 90 (Fig. 5) is normally urged toward the forward end of the carriage 70 by a compression spring 112 centered on a pin 114 projecting inwardly from the rear end of the carriage 70 and bearing against the rear end of the indexing bar 90. A micrometer adjusting screw 116, threadedly received in an opening 118 provided at the front end of the carriage in position to be abutted by the forward end of the indexing bar, serves to limit and determine the forward position of the guide bar 90 relatively to the carriage 70. Accurate adjustment of the position of the carriage relatively to the indexing bar 90 may be effected by turning the adjusting screw 116 in the

threaded opening 118 and to this end a control knob 120 is secured on the end of the adjusting screw 116. The knob carries an abutment pin 122 designed for engagement with a limit or stop pin 124 which projects through an overlying flange 126 formed on the front end of the carriage 70 and which establishes a "zero" position on the screw 116. A series of indicia 128 providing a scale is formed on the circular periphery of the adjusting knob 120 and is designed for cooperation with a reference mark 130 provided on the flange 126. For purposes that will be made clear presently the control knob 120 is calibrated in graduations of 0.005 inch each and each such graduation represents 0.0025 inch axial displacement of the adjusting screw 116 when the latter is turned in the threaded opening 118 in one direction or the other.

The indexing holes 94 are so located on the indexing bar 90 as to establish spaced predetermined positions of the carriage 70 on the base 10 and accordingly to establish corresponding predetermined positions of the pivot axis of the carriage 78 relatively to the surface of the grinding element 48. In the present illustrative embodiment the indexing holes 94 are spaced apart on one-half inch centers and are so located as to determine positions of the aforesaid pivot axis spaced from the grinding element 48, ranging from 4½ inches to 8 inches. The several indexing holes 94 are labeled respectively with indicia representing diameters corresponding to the respective radii which the holes establish as above explained. For example, the hole 94 at the right-hand end of the series (as viewed in Fig. 5) is so located that when the carriage is in the position in which that hole is in registry with the locking pin 96 and the screw 116 is in its zero position, the pivot axis of the carriage 78 is exactly 4½ inches from the surface of the grinding element.

Means are provided for securely locking the carriage to the bed plate 22 in any one of its indexed or adjusted positions. To this end a locking assembly is provided which includes a clamp shoe 130 (Figs. 4 and 5) tiltably supported on a collar 132 which is supported on an adjusting nut 133 threadedly received on the lower end of a stud 134, the other end of which is threadedly received in the carriage 70. A thrust pin 136 has its lower end seated in a depression 138 provided in the clamp shoe 130 and has a portion 140 thereof threadedly received in the carriage 70. A handle 142 is fixedly received in the head 144 of the thrust pin 136 and is adapted to be swung from the full line position thereof indicated in Fig. 2, wherein it is in engagement with a limit stop or abutment 146, to a dotted line position wherein it is in engagement with an abutment 148. In the full line position of the handle 142, the clamp shoe 130 has its clamping surface 150 in light engagement with the underneath surface of the bed plate 22 while in the dotted line position of the handle 142 the clamping surface 150 bears firmly against the underneath surface of the top wall 22 of the base 10 and serves to lock the carriage 70 in its desired position of adjustment. The rib 87 is provided with a longitudinally extending slot through which the stud 134 and pin 136 extend, enabling sliding movement of the carriage.

The brake shoe supporting assembly holder 80 (Fig. 5) is slidably mounted upon the carriage 78 which, as explained hereinbefore, is pivotally mounted on the reciprocable carriage 70 for oscillatory movements thereon. To this end the turntable supporting or bed surface 74 of the carriage 70 is formed with a circular track or rail portion 162 and the carriage 78 includes the turntable 76 previously mentioned which is formed with a surface 166 adapted to ride on the circular track portion 162. The turntable 76 also is formed with an annular flange 168 which encompasses the track portion 162 and provides a seal or protection against ingress of dust or other foreign material between the turntable 76 and turntable bed 74. A headed pivot pin 170 in the form of a shoulder bolt extends through and is secured to the carriage 70 centrally of the bed surface 74 thereof as by a nut 171 and passes through bosses 172 and 174, provided on the carriage 70 and on the turntable 76 respectively, and serves to center the turntable 76 on the bed 74 while permitting turning movement of the carriage 78 as a whole about the axis of the bolt 170, which is the pivot axis above mentioned. In the manufacture of the device, the head of the bolt 170 is held to close tolerances and accurate concentricity relative to the shank.

The carriage 78 includes an upstanding block portion 176 having a V-shaped groove or slot 178 formed therein and a cap member 180 having a V-shaped groove 182 formed therein is disposed upon the block portion 176 and is adapted to be secured thereto by means of countersunk studs 184. The V-shaped groove 178 provided in the block portion 176 and the V-shaped groove 182 provided in the cap member 180 together form an elongated guide opening or way 186, which slidably receives therein an elongated supporting bar 188, of similar cross-sectional shape. Preferably the V-shaped grooves are so formed that the way 186 is of square cross-section.

The brake shoe supporting holder or chuck 80 (see Figs. 5, 6 and 7) includes a saddle-like lower clamp or supporting bracket 192 having feet 193 which straddle the supporting bar 188 (Figs. 1 and 5) and which is secured by means of cap screws, one of which is shown at 194, to the rear end of the supporting bar 188 so as to be movable unitarily therewith.

The supporting bracket 192, which may be formed as a casting, includes a lower, generally T-shaped portion 196 (Figs. 2, 5, 6 and 7) which has formed thereon at spaced points a pair of bosses 198, each having an upstanding rib or pad 205 designed for reception thereon of the arcuate center flange F of a brake shoe BS, the lining L of which is to be ground. A locating pin 199 extends through each boss 198 and is adapted to be adjustably secured in position therein as by means of a set screw 201. The locating pins 199 are adapted to engage the inner surface of the brake shoe rim R at spaced points therealong when the brake shoe is placed in the holder 80 to properly position the brake shoe therein.

The supporting bracket 192 is provided with an overlying portion 200 including a threaded boss 202 which receives therein the threaded end of a clamping stud 204. An upper clamp or clamping head 206 slidable on clamping stud 204 is provided with an apron 210 which encloses the boss 202 and certain other elements hereinafter described, and a pair of spaced toes 212 formed at spaced points at its rear end and disposed above and in alignment with the pads 205 for clamping engagement with the upper surface of the flange F of the brake shoe to be processed. The clamping stud 204 passes through a boss 214 formed on the head 206 and is provided with a manipulating knob 216 by means of which the head 206 may be moved downwardly to bring the toes 212 into clamping engagement with the flange F of the brake shoe. A spring 218 disposed between the apron 210 and overlying portion 200 of the supporting bracket 192 serves to yieldingly urge the movable head 206 toward open position relatively to the supporting bracket 192.

The portion 196 is also provided with a third upstanding rib or pad 203 located intermediate the two outer pads 205, the upper surface of the pad 203 and the upper surfaces of the pads 205 lying in a common plane perpendicular to the abrasive surface. The pad 203 and the two pads 205 are disposed generally along the arc of a circle and are so located that when any brake shoe within the range of sizes which the holder is designed to accommodate is disposed in position in the holder, the flange of such brake shoe is engaged by the three pads 203 and 205 at points approximately equidistant from the rim, which points lie in the afore-

mentioned plane which is perpendicular to the abrasive surface. Accordingly, and as will appear hereinafter, any brake shoe within the aforesaid range of sizes will be supported in position with its braking surface extending substantially vertically and therefore substantially parallel to the abrasive surface of the grinder.

In the case of many conventional brake shoes the flange extends with its medial plane perpendicular to the exposed braking surface of the brake shoe lining, but since the flange increases in thickness in a direction from the rim toward the inner edge of the flange, the faces of the flange therefore are not planar and are not parallel to the medial plane of the flange but are portions of cones and diverge from the rim and are inclined to the medial plane. Accordingly, if the brake shoe were supported in the grinder of this invention with one face of the flange clamped against a flat, horizontal surface, or two spaced surfaces, extending over a substantial portion of the radial length of the flange, or three surfaces not equidistant from the rim, the brake shoe would be positioned with its medial plane inclined to the abrasive surface and consequently the exposed braking surface would also be inclined to the abrasive surface. However, in the holder of the present invention the flange of the brake shoe is clamped against three spaced supporting surfaces of relatively narrow extent (measured in a direction radially of the brake shoe) and the surfaces are so arranged that they engage the brake shoe at three spaced points approximately equidistant from the rim. Since, as aforesaid, the three supporting surfaces lie in a plane normal to the abrasive surface the brake shoe is therefore supported with its exposed braking surface extending substantially parallel to the abrasive surface, i. e., in a position that may be, for practical purposes, considered parallel, because the variation from parallel arrangement in any particular case would be negligible. In order to permit the holder to accommodate brake shoes of various radii, as for example brake shoes for brake drums having diameters ranging from 9 to 16 inches, the pads are disposed so that they engage any brake shoe within the aforesaid range of sizes at points which are approximately equidistant from the rim.

Referring now to Fig. 6 wherein there is shown somewhat diagrammatically the relative positions of two brake shoes in position in the holder, namely, the smallest standard brake shoe BS' and the largest standard brake shoe BS", respectively. It will be noted that the two outer pads 205 are positioned to engage the flanges F' and F" of the respective brake shoes BS' and BS" at points along lines C' and C" representing arcs drawn about the centers of curvature of the rims R' and R" of the brake shoes BS' and BS", respectively, and passing along the flanges F' and F" intermediate the rims R' and R" and the inner edges of the flanges F' and F". The center pad 203 is positioned to engage the flanges at a point on each flange respectively between the arcs C' and C". Accordingly, while the center pad 203 does not engage either flange at precisely on the arc drawn about the center of curvature it does engage each flange at a point sufficiently close to such arc that the error thus resulting does not seriously affect the proper positioning of the brake shoe in the holder.

While the holder has been described with particular reference to its use in connection with brake shoes having tapered flanges, it will be apparent that it is also suitable for use with brake shoes having flanges of uniform thickness.

Means are provided for adjustably positioning the supporting bar 188 and the holder 80 relatively to the pivoted carriage 78 and for rocking the latter about its pivot. Such means includes a tubular socket member or block 222 of externally square cross-section, tiltably mounted upon a rock shaft 208 and provided with a cylindrical bore 224 therein adapted to receive one end of an elongated operating rod 226. The rock shaft 208 extends between and is supported in a pair of forwardly extending side flanges 220 (Figs. 1, 2 and 5) formed on the supporting bracket 192. The rear end of the rod 226 is provided with an annular groove 228 therearound and the rock shaft 208 passes through the socket member 222 in such a manner that it enters the groove 228 and serves as a locking pin for holding the end of the operating rod 226 within the bore 224 of the socket member 222 against longitudinal or axial shifting movement while at the same time permitting free turning movement of the rod 226 relative to the socket member 222.

From the above description of parts it will be seen that the rock shaft 208 serves the functions of tiltably supporting the socket member 222 and of holding the end of the operating rod 226 within the bore 224 of the socket member 222.

The operating rod 226 extends forwardly of the brake shoe supporting assembly to overlie the forward end of the machine and is provided with threads 230 throughout the major portion of its length. A handle 232 (Fig. 1) is secured on the forward end of the rod 226 in order that an operator may impart turning movements to the rod as well as to oscillate the same from side to side. The threaded portion 230 of the rod 226 is adapted to be received in a "half-nut" structure 234 provided on the carriage 78 by virtue of a pair of upstanding members or ears 236 (Figs. 2 and 3) which define therebetween a semicircular threaded bore 238, the threads of which are designed for cooperation with the threads 230 on the rod 226. The flat sides of the socket 222 cooperate with the side flanges 220 to constitute means for maintaining the threaded portion 230 of the rod 226 in vertical alignment with the half-nut 234 so that upon downward swinging movement of the rod 226 in any position of the turntable the threaded portion 230 will fall into register automatically with the half-nut 234.

Since the rod 226, by virtue of its reception in the socket member 222 is pivoted for rocking movement about the axis of the rock shaft 208 in a vertical plane, it will be seen that the operator may at will lift the rod 226 out of the half-nut structure 234 to disengage the same therefrom and by applying a thrust or a pull to the rod 226, as the case may be, slide the holder 80 and the supporting bar 188 as a unit longitudinally of the machine toward and away from the grinder 47. Such sliding movement of the holder 80 by the application of a thrust or a pull to the rod 226 provides a fast or coarse adjustment for the purpose of advancing a brake shoe into initial grinding relation with respect to the grinding wheel 48. When the lining L of the brake shoe has been brought into close proximity to the surface 49 of the grinding wheel 48, a fine adjustment may be made by lowering the operating rod 226 into the half-nut 234 for engagement between the threads thereof with the threads 230 on the rod, after which turning movement of the handle 232 in one direction or the other will feed the holder 80, together with the brake shoe supported thereon, toward the cylindrical grinding wheel 48 for grinding purposes. A scale 227, graduated in thousandths of an inch, is provided on the rod or feed screw 226 and cooperates with a reference mark 229 on the socket member 222 to indicate the extent of the feed just described.

It has been found that the operator when swinging the rod 226 to rock the carriage 78 about its pivot (as hereinafter explained) often tends to turn the rod 226 unintentionally about its axis and thereby advance or retract the brake shoe holder. Accordingly, I preferably provide suitable friction means for inhibiting such turning movement of the rod relatively to the half-nut 234. To this end I preferably form a bore 235 in the end portion of the rod 226 and dispose therein two ball bearings 237 which are yieldingly urged into engagement with the wall of the bore 224 by a coil spring 239 with sufficient force to provide the desired resistance to turning movement of the rod in the socket 222.

To illustrate the operation of the apparatus in processing the lining L of a standard brake shoe BS in new condition, it may be assumed that a 9 inch brake shoe is to be processed for use with a brake drum which is exactly 9 inches in diameter. Thus for effective processing of the lining L, grinding operations on a 4½ inch radius will have to be performed so that the surface of the brake shoe lining will have an arcuate contour formed with a 4½ inch radius. It is necessary, therefore, that during the grinding operation the distance from the pivot axis of the carriage 78 (Fig. 5) to the periphery of the grinding surface 49 of the grinding wheel 48 be 4½ inches. With the handle 142 in its full line position (as shown in Fig. 2), the clamp shoe 130 is free and the carriage 70 is capable of free sliding movement on the bed plate or top wall 22 of the base 10. Inasmuch as the brake shoe is to be ground to a 4½ inch radius no adjustments of the knob 128 (Fig. 5) are necessary other than to ascertain the fact that the scale 128 is at its zero position with the abutment pin 122 bearing against the right-hand side of the stop or limit pin 124 as viewed in Fig. 3.

The end of the indexing locking pin 96 is retracted and the carriage 70 is moved to an approximate position wherein the opening or hole 94 labeled "9" is brought into register with the opening 98 in the side wall 100 (Fig. 4) on the groove 88, after which release of the pin 96 will permit the spring 104 to urge the pin inwardly into the opening 94 to index the carriage 70 to its proper position for grinding on a 4½ inch radius. To lock the carriage 70 securely in this position the handle 142 is moved from its full line position to its dotted line position (as shown in Fig. 2), so that the thrust pin 136 engages the depression 138 provided in the clamp shoe 130 to tilt the shoe in a clockwise direction (as viewed in Fig. 1), and thus bind the carriage 70 and base 10 against relative displacement.

Prior to the grinding operation it is, of course, necessary to properly position a brake shoe of the desired size in the holder 80 and accordingly the knob 216 is manipulated to back off the clamping stud 204 to move clamping jaws 212 away from the bosses 198 after which time a brake shoe BS is positioned in the holder with the flange F resting on the surfaces of the pads 203 and 205 and with the locating pins 199 engaging the inner surface of the rim R at spaced points. Tightening of the knob 216 will serve to move the clamping head 206 downwardly and cause the jaws 212 to engage the flange F and clamp the same against surfaces of the pads 203 and 205 in proper position for grinding the lining L of the brake shoe. The brake shoe is positioned in the holder by abutment with the two pins 199 which are so located that the surface of the brake shoe is concentric with the pivot axis of the carriage 78 and the surface of the lining L is closely parallel to the abrasive surface 49. Accordingly when the carriage 78 is rocked about its pivot axis, with a brake shoe positioned in the holder 80, the brake shoe surface moves about such axis in a true circular path.

With the brake shoe BS thus positioned in proper alignment with the grinding wheel 48, the holder 80 may, by a fast adjustment as previously described, be brought to a position wherein the lining L is brought into close proximity with the abrading surface 49 of the grinding wheel 48. To accomplish this the operating rod 226 is manually tilted upwardly about its pivotal axis of support on the shaft 208 so that the threaded portion 230 of the operating rod is removed from the half-nut structure after which, by exerting a manual thrust on the rod 226, holder 80 is advanced until the surface of the lining L closely approaches the grinding surface of the grinding wheel 48. At this time the threaded portion 230 of the operating rod is lowered into the half-nut structure 234 to secure the holder 80 in position. With the brake shoe lining L in close proximity to the cylindrical grinding surface of the grinding wheel 48 and with the threaded portion 230 of the rod 226 located within the half-nut structure 234, the operator may, by rotating the rod 226 in a clockwise direction (as viewed in Fig. 3), accurately feed the lining L toward the rotating grinding wheel.

When the rod 226 is swung from side to side and rotated to impart feed movement to the holder 80, the surface of the lining will be dressed down by the grinding wheel to a true circular arc having a radius of curvature corresponding to the setting of the indexing means. Screw feed movement of the rod 226 regulates the amount of material removed.

In certain instances the operator may wish to remove a predetermined depth of material from the brake shoe lining or to determine exactly how much material has been removed. Accordingly a scale 227 is provided in the shank of the rod 226 adjacent the socket member 222 and an index mark 229 is provided on the latter. Thus, the distance that the holder is moved by the fine screw feed may be determined by observing the scale.

In processing brakes it is often found that the drum has been badly scored and that in order to provide a true cylindrical braking surface the drum has to be bored out to make its surface truly cylindrical. The brake shoe must be relined and dressed accordingly. If, for example, a depth of 0.060 inch of metal is removed from a 10 inch diameter drum thereby increasing the drum diameter by twice that amount, it is apparent that the dressing procedure on an oversize new lining provided on the original brake shoe would have to be conducted with the grinding taking place on a radius of 0.060 inch greater than the radius of the original standard drum and brake shoe. In such case it is necessary to adjust the sliding carriage 70 so that the pivot axis of the pivoted carriage 78 assumes a position 5.060 inches from the surface of the grinding wheel 47, whereby, upon oscillation of the carriage 78 during the grinding operation, the radius of the path of movement of the dressed surface of the lining will be 5.060 inches.

To provide for the grinding of a brake shoe lining L on such an oversize radius of curvature as that given in the example outlined above, it is merely necessary for the operator to index the carriage 70 by moving it to the appropriate position wherein the second hole of the series (reading from right to left in Fig. 5) is in registry with the pin 96 and permitting the pin to enter the hole, and to adjust the knob 120 to a position wherein the 0.120 index on the scale 128 is opposite the pointer. This latter adjustment is attained by a clockwise movement of the micrometer knob 120 which draws the abutment pin 122 away from the stop pin 124 and feeds the adjusting screw 116 inwardly of the carriage 70. The end of the adjusting screw 116 thus bears against the end of the indexing bar 90 and draws the carriage 70 forwardly the desired 0.060 inch distance. The grinding of the lining L on the 5.060 inch radius may then take place in the manner previously described by oscillation of the rod 226 from side to side.

The device of the present invention provides convenient means for forming a bevel on each end of the brake shoe lining by a simple manipulation of the operating rod 226 and without changing the setting of the carriage 76. To form such bevel, the operating rod is raised out of engagement with the half-nut and the carriage 76 swung to a position wherein one end of the brake shoe lining is opposite the grinder 47. By appropriate manipulation of the rod 226, the holder 80 is then moved rearwardly without swinging movement to push the end of the brake shoe lining against the surface 49 of the grinder 47 and thereby grind a bevel on the end of the lining. The holder 80 is then backed off and swung to a position to bring the other end of the lining opposite the grinder whereupon the beveling operation is repeated in respect to that end of the lining.

From the foregoing it will be seen that the present

invention provides a grinding device which is especially well adapted for grinding lined brake shoes to true arcuate contour, which is simple in construction, and which may be made economically. At the same time, however, the device is rugged and sturdy and can be used for a long period without likelihood of breakage of parts and without the necessity of replacing parts.

The device is relatively simple to operate and can be operated without requiring great skill or training on the part of the operator. The initial setting of the carriage to a position of adjustment corresponding to the standard size of brake shoe to be ground may be effected quickly and easily by merely pulling the pin 96 out of engagement with the indexing bar 90 and sliding the carriage on the base to the proper position as indicated on the appropriate scale and then releasing the pin 96. The carriage thus is accurately and positively indexed in a substantially foolproof manner. It may then be quickly clamped securely in the indexed position. The final adjustment of the carriage may be made quickly and easily by turning the knob 120 and it is only necessary for the operator to make a single reading to be sure that the knob is turned to the proper position.

The brake shoe to be ground may be easily inserted in the holder by a simple operation consisting merely of sliding the flange into position and causing the rim to abut the positioning pins whereafter the clamping knob 116 is tightened. As previously explained the brake shoe is positioned accurately by the pins and no centering or adjusting operation is required other than merely insuring that the shoe firmly abuts the pins.

The brake shoe is brought into close proximity to the grinding wheel by merely tilting the operating rod out of the half-nut and sliding the support rearwardly of the device. Thereafter the fine adjustment may be effected by merely turning the rod. It will be noted that after one brake shoe has been ground and has been removed and a second brake shoe placed in the holder and it is desired to move the holder forwardly in order to reset it for feeding the second brake shoe, it is not necessary to back off the operating rod but it need only be rocked out of the half-nut whereupon the holder may be slid forwardly of the device sufficiently to allow for the desired feed of the second brake shoe.

The sliding carriage is mounted directly on the base of the device and is supported thereon by the side rails which are spaced apart a substantial distance, as well as by the central rib, and accordingly the carriage is very firmly supported. Additionally the carriage is clamped directly to the base which provides a very firm and positive support for the carriage so that there is no likelihood of displacement of the pivot axis during operation and no strain on the indexing or micrometer adjustment mechanisms.

The construction of the device is such that substantially all of the bearing surfaces are protected and there is little possibility of foreign matter such as the comminuted products of abrasion collecting on such surfaces and interfering with the proper operation of the device. For example, it will be noted that the bearing surfaces for the turntable are completely protected as are the bearing surfaces which support the sliding carriage; also the indexing bar is substantially enclosed between the base and sliding carriage. Furthermore, the grinding wheel is enclosed, except for a small portion which is exposed for contact with the brake shoe lining, and means are provided for collecting and removing the comminuted products of abrasion so that there is little likelihood of such products escaping and being deposited on any of the operating portions of the device outside of the casing portions which perform the collecting function.

The device is of such design that there are a minimum of critical dimensions and accordingly the device can be manufactured relatively inexpensively. It will be appreciated that an important dimensional relationship is the positioning of the pivot pin 170 which establishes the pivot axis of the pivoted carriage relatively to the grinding element. This, as will be understood, is established by the cooperation between the indexing bar, the base and the sliding carriage as well as the micrometer adjusting screw. It is, of course, necessary that the indexing holes 94 be accurately positioned relative to each other, which operation as will be understood can be easily performed with accuracy. The calibration of the device for accurate adjustment of the pivot pin may be accomplished in a very convenient manner by adjusting the rotational position of the knob 120 on the screw 116. For example, should it be found that through some small manufacturing error the pivot axis is not located exactly at the distance from the surface of the grinding wheel corresponding to the setting of the indexing bar, the device may be calibrated to exact "zero" setting as follows. The carriage is indexed to one of its predetermined spaced positions corresponding to a standard brake drum diameter, and the micrometer adjustment knob 120 operated to move the carriage to a position wherein its pivot axis is located a distance from the surface of the grinding wheel corresponding exactly to the indexed position of the carriage as determined by an actual measurement made by the manufacturer. This conveniently is accomplished by gauging the distance between the head of the shoulder bolt 170 and the spindle 40, and adjusting the carriage to the proper position. Should it be noted that after such adjustment the knob 120 is not in its zero position, the set screw in the knob is loosened and the knob turned on the screw 116 until the knob stands in its zero position. Thereafter the set screw is tightened to secure the knob in its relocated position on the screw 116.

It will be noted that the adjustable relationships between the various adjustable members of the device are either linear or truly circular and there is no eccentric adjustment; accordingly all of the indexes and scales are graduated in linear relationships. That is to say, the indexing holes 94 are spaced apart equally and the scales on the micrometer adjustment knob and on the operating rod are both lined in equal graduations. It will be understood by those skilled in the art that such scales can be readily lined with a high degree of accuracy.

I claim:

1. In a brake shoe grinding apparatus, a base, a grinding element mounted on said base, a carriage mounted on said base for movement toward and away from said grinding element, a turntable pivotally mounted on said carriage, a brake shoe supporting chuck assembly slidably disposed on said turntable for radial movement thereon, an open half-nut on said turntable, a feed screw rotatably and swingably secured to said chuck assembly and swingable into and out of threaded engagement with said half-nut, said feed screw constituting a thrust rod for manually sliding said chuck assembly radially on said turntable when disengaged from said half-nut and constituting feed means for adjustably moving said chuck assembly radially on the turntable upon rotation of the feed screw when it is in threaded engagement with said half-nut.

2. In a brake shoe grinding apparatus, a base, a grinding element mounted on said base, a carriage mounted on said base for movement toward and away from said grinding element, means on said base for selectively securing said carriage in any one of a plurality of predetermined positions, a turntable pivotally mounted on said carriage, a brake shoe supporting chuck assembly slidably disposed on said turntable for radial movement thereon, an open half-nut secured to said turntable, a rotatable feed screw, means pivotally securing said feed screw to said chuck assembly for swinging movement in a plane passing through the pivotal axis of said turntable and through said half-nut, said feed screw being movable in said plane into and out of threaded engage-

ment with said half-nut, said feed screw constituting a thrust rod for manually sliding said chuck assembly radially on said turntable when disengaged from said half-nut and constituting feed means for adjustably sliding said chuck assembly radially on the turntable when it is in engagement with said half-nut, said feed screw and half-nut constituting means for oscillating said chuck assembly and turntable about the pivotal axis of the latter when said feed screw is in engagement with said half-nut.

3. In a brake shoe grinding apparatus, a base, a grinding element mounted on said base, a carriage mounted on said base for movement toward and away from said grinding element, a turntable pivotally mounted on said carriage, a brake shoe supporting chuck assembly slidably disposed on said turntable for radial movement thereon, an open half-nut on said turntable, a socket member pivotally secured to said turntable for swinging movement in a plane passing through the pivotal axis of said turntable and through said half-nut, and a feed screw having one end secured in said socket member for rotation therein but restrained against axial movement therein, said feed screw being movable from a position out of threaded engagement with said half-nut to a position wherein it is in threaded position with said half-nut.

4. In a brake shoe grinding apparatus, a base, a grinding element mounted on said base, a carriage mounted on said base for movement toward and away from said grinding element, means on said base releasably interengageable with said carriage at any of a plurality of positions on the carriage for securing the carriage on the base in any one of a number of selected positions thereon, a turntable pivotally mounted on said carriage, a brake shoe supporting chuck assembly slidably disposed on said turntable, said chuck assembly including a block portion adapted to receive thereon the flange of a brake shoe to be operated upon, a clamping head movably mounted on said block portion and having a pair of spaced clamping jaws designed for cooperation with said block portion to clamp the brake shoe flange thereon, means interconnecting said block portion and clamping head for producing clamping action therebetween, a rock shaft mounted on said block portion, a socket member pivotally mounted on said rock shaft with the rock shaft extending transversely through the socket, a half-nut on said turntable, a feed screw having one end thereof disposed in said socket member for rotation therein, said end of the feed screw having a circumferential groove through which said rock shaft extends to prevent longitudinal shifting movement of the feed screw in said socket member, said feed screw being swingable about the axis of said rock shaft for movement into and out of engagement with said half-nut and having a threaded portion designed for threaded engagement with said half-nut.

5. A brake shoe grinder comprising a base, a grinding element supported on said base, a carriage supported on said base and adjustable thereon toward and away from said grinding element, and a brake shoe holder on said carriage including a first clamp element formed with three fixed, spaced pads having brake shoe flange-engaging surfaces lying in a plane to engage one face of the flange of a brake shoe in the holder, the inner of said surfaces being so located relatively to the outer of said surfaces that it lies intermediate two arcs in said plane, passing through said outer faces and having curvatures equal respectively to the curvatures of the circumferential center lines of the flanges of the largest and smallest brake shoes corresponding to the limits of adjustment of said carriage on said base, a second clamp element having brake shoe flange-engaging surfaces spaced apart, in alignment respectively with the outer ones of said pads and lying in a plane spaced from the first plane and positioned to engage the other face of the flange, and means interacting between said clamp elements for effecting relative movement of said clamp elements to clamp a brake shoe flange between said surfaces.

6. A brake shoe grinder comprising a base, a grinding element supported on said base, a carriage supported on said base and adjustable thereon toward and away from said grinding element and a brake shoe holder on said carriage including a first clamp element formed with three spaced pads having brake shoe flange-engaging surfaces, lying in a plane, and disposed along a circular arc, all of said surfaces being elongated in the direction of said arc and disposed to engage one face of the flange of a brake shoe in the holder, means on said holder adjacent the outer ones of said pads for engagement with the brake shoe rim and constituting sole means for positioning the brake shoe so that said surfaces are disposed at points lying approximately equidistant from the rim of the brake shoe, a second clamp element having brake shoe flange-engaging surfaces spaced from said surfaces and positioned to engage the other face of said flange, and means interacting between said clamp elements for effecting relative movement of said clamp elements to clamp a brake shoe flange between said surfaces.

7. A brake shoe grinder adapted for supporting and grinding brake shoes having flanges within a predetermined range of sizes, comprising a base, a grinding element supported on said base, a carriage supported on said base and adjustable thereon toward and away from said grinding element and a brake shoe holder on said carriage including a first clamp element formed with three fixed, spaced pads having brake shoe flange-engaging surfaces, lying in a plane, and disposed along a circular arc, having a radius intermediate the radii of the circumferential center lines respectively of the largest and smallest brake shoes within said range, in position to engage one face of the flange of a brake shoe, a second clamp element having spaced brake shoe flange-engaging surfaces lying in a plane parallel to and spaced from the plane of said first surfaces and positioned to engage the other face of the flange, means on said holder adjacent the outer ones of said pads for engagement with the brake shoe rim and constituting sole means for positioning the brake shoe and locating it relative to the arcs of the shoe and pads, and means interacting between said clamp elements for effecting relative movement of said clamp elements to clamp a brake shoe flange between said surfaces.

8. A brake shoe grinder comprising a base, a grinding element supported on said base, a carriage supported on said base and adjustable thereon toward and away from said grinding element and a brake shoe holder on said carriage including a first clamp element formed with three fixed, spaced pads having brake shoe flange-engaging surfaces lying in a plane to engage one face of the flange of a brake shoe in the holder, the inner of said surfaces being so located relatively to the outer of said surfaces that it lies intermediate two arcs in said plane, passing through said outer faces and having curvatures equal respectively to the curvatures of the circumferential center lines of the flanges of the largest and smallest brake shoes corresponding to the limits of adjustment of said carriage on said base, a second clamp element having brake shoe flange-engaging surfaces spaced apart and spaced from the first surfaces and positioned to engage the other face of the flange, a pair of spaced abutments adjacent but displaced forwardly from and below the plane of the first surfaces for engagement with the inner face of the rim of the brake shoe in said holder, and means interacting between said clamp elements for effecting relative movement of said clamp elements to clamp a brake shoe flange between said surfaces.

9. A brake shoe grinder comprising a base, a grinding element supported on said base, a carriage supported on said base and adjustable thereon toward and away from said grinding element and a brake shoe holder on said carriage including a first clamp element formed with three

fixed, spaced pads having brake shoe flange-engaging surfaces lying in a plane to engage one face of the flange of a brake shoe in the holder, the inner of said surfaces being so located relatively to the outer of said surfaces that it lies intermediate two arcs in said plane, passing through said outer faces and having curvatures equal respectively to the curvatures of the circumferential center lines of the flanges of the largest and smallest brake shoes corresponding to the limits of adjustment of said carriage on said base, a second clamp element having brake shoe flange-engaging feet opposite and aligned with the outer two of said pads, and means interacting between said clamp elements for effecting relative movement of said clamp elements to clamp a brake shoe flange between said surfaces and said feet.

10. A grinder comprising a base, a grinding element supported on said base, a carriage supported on said base and slidably adjustable thereon solely along a straight line toward and away from said grinding element, a holder for an article to be ground, means movably and pivotally mounting said holder on said carriage, means on said holder for moving said holder on and relative to said carriage and relative to said pivot means in directions toward and away from said grinding element, means on said base and carriage for releasably locking said carriage selectively in any one of a plurality of spaced positions of adjustment relatively to the base and grinding element, said locking means including a locking element having a fixed location relative to the base and an adjustable element cooperable with the locking element, means interposed between said locking element and adjustable element for establishing reaction therebetween, said adjustable element being operative for adjusting said carriage along said straight line toward and away from said grinding element when said locking means is in locking condition through an infinitely variable adjustment from any one of said positions, indicia means on said base and carriage for indicating the distance between the carriage and grinding element according to each of said positions, and indicia means for indicating the extent of movement by said adjustable element from any given one of said positions.

11. A grinder comprising a base, a grinding element rotatably supported on said base, a carriage supported on said base and slidably adjustable thereon toward and away from said grinding element, a holder for an article to be ground pivotally mounted on said carriage on an axis parallel with the axis of rotation of the grinding element, an indexing element on said base slidably adjustable thereon toward and away from said grinding element, means on said base guiding said indexing element for movement in straight line directions, said indexing element having a plurality of longitudinally aligned and spaced locking elements at predetermined intervals, means on said base engageable with said locking elements selectively for locking said indexing element in respective positions corresponding with the locking elements, and calibrated means interacting between said carriage and indexing element for adjustably moving said carriage in micrometric movements along and relatively to said indexing element in directions toward and away from said grinding element, said indexing element and carriage having interengaging elements for guiding the carriage in straight line directions.

12. A brake shoe grinding apparatus comprising a base, a grinding element rotatably mounted on said base, a carriage slidably mounted on said base and movable toward and away from said grinding element, a brake shoe holder, means pivotally mounting the brake shoe holder on said carriage on an axis parallel with the axis of rotation of said grinding element, said brake shoe holder being adjustable on the carriage in directions toward and away from said grinding element and relative to said pivot means whereby the brake shoe holder is enabled to be placed in different positions in any given fixed position of the pivot means relative to the grinding element, a guide element mounted on said base for sliding adjustment toward and away from said grinding element and having engagement with the carriage for guiding the carriage longitudinally of the guide element, means on said base for selectively retaining said guide element in any of a plurality of different positions, a stop on the carriage positioned for engagement with an end surface of said guide element to locate the carriage in a predetermined position relatively to the guide element, means interacting between said carriage and guide element normally retaining said stop and guide element in interengagement, and indicating means on the base and carriage for indicating the positions of the carriage relative to the grinding element corresponding to said positions of the guide element, said stop being adjustable in the carriage in the directions of movement of the carriage.

13. A brake shoe grinding apparatus comprising a base, means on said base establishing a grinding surface, a guide bar slidably disposed on said base and movable toward and away from said grinding surface, a carriage slidably mounted on said base and likewise movable toward and away from said grinding surface, said carriage having sliding engagement with said guide bar whereby the latter controls the direction of movement of the carriage, an adjustable stop mounted on said carriage and positioned for engagement with said guide bar to move said carriage in micrometric movements relative to the guide bar, means on said base for selectively retaining said guide bar on said base in any of a plurality of different predetermined positions, a brake shoe holder, means movably and pivotally mounting the brake shoe holder on said carriage, and means on said brake shoe holder for moving the brake shoe holder on and relative to the carriage and relative to the pivot axis of the holder toward and away from said grinding surface.

14. A brake shoe grinding apparatus comprising a base, means on said base establishing a grinding surface, a guide bar slidably disposed on said base and movable in directions toward and away from said grinding surface, means on said base for selectively and releasably retaining said guide bar in any of a plurality of different predetermined positions, a carriage mounted on the base and movable toward and away from said grinding surface and slidable relative to said guide bar and base, said guide bar controlling the direction of movements of said carriage, yieldable means interacting between said carriage and guide bar normally biasing said carriage relative to said guide bar in the direction toward the grinding surface, calibrated means on said base for adjusting the position of said carriage relative to said guide bar in any selected position of the latter, a brake shoe holder, means movably and pivotally mounting said brake shoe holder on said carriage, and means on said brake shoe holder for moving the brake shoe holder on and relative to said carriage and relative to the pivot axis of the holder in directions toward and away from said grinding surface.

References Cited in the file of this patent

UNITED STATES PATENTS

272,304	Müller	Feb. 13, 1883
804,793	Chard	Nov. 14, 1905
1,094,601	Schellenbach	Apr. 28, 1914
1,137,251	Backert	Apr. 27, 1915
1,156,292	Johnson	Oct. 12, 1915
1,231,946	Schellenbach	July 3, 1917
1,997,609	Thomason	Apr. 16, 1935
2,118,003	Bigelow	May 17, 1938
2,304,530	Bigelow	Dec. 8, 1942
2,325,826	Barrett	Aug. 3, 1943
2,345,161	Thomason	Mar. 28, 1944
2,392,667	Hawkinson	Jan. 8, 1946
2,577,534	Lowe	Dec. 4, 1951