D.L. APPLICATION

C.3 QUAD-SEGMENTAL COVERING

3.1 Quad-seg. covering shall be secured with 16 ga. S/S wire.
3.1a 6 wraps of wire for each 36" segment shall be positioned as shown in figure 13.
3.1b At no time shall the wires be placed on centers of more than 8" on quad-seg. P.C.
3.1c Figure 13 shows the proper positioning of the wires on quad-seg. covering.

FIG. 13 — QUAD-SEG. P.C. 1ST. LAYER

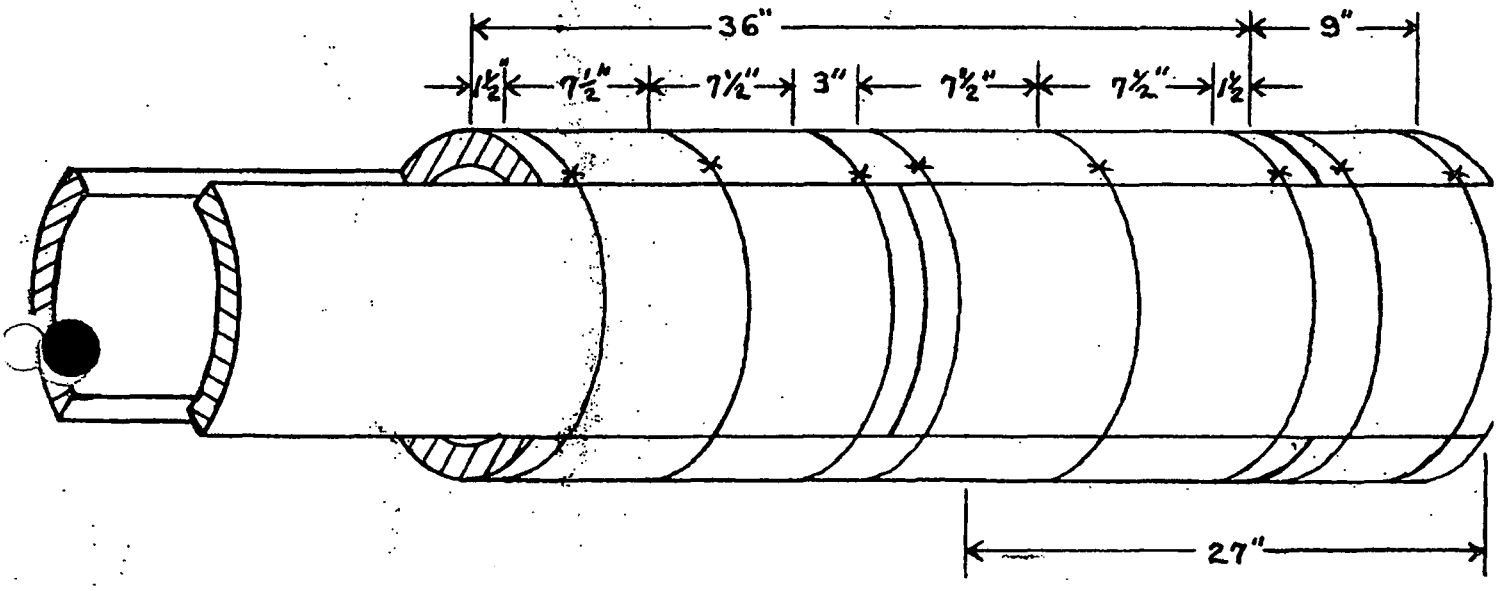

C.4 K-SEGMENTAL COVERING

4.1 K-seg. covering shall be secured with 16 ga. S/S wire.
4.1a K-seg., both even and uneven segment, covering shall have 6 wraps of wire for each 36" long segment, positioned as shown in figure 14.
4.1b At no time shall the wire be placed on centers of more than 8" on quad-seg. covering.