AMERICAN HEAT RECLAIMING CORPORATION

SPIRAL EXCHANGER

OPERATION & MAINTENANCE

These instructions apply to the following Spiral Exchangers.

Ref. #AS-3276 Serial #6389 Type I-V Size 150 sq.ft.

GASKETS

Hot Side: Comp. Asbestos - Anchor 425
Cold Side: Teflon Impregnated Asbestos - Anchor 1188

DESCRIPTION

The Spiral Exchanger is made in three basic types: Type I, Type II and Type III. Schematic drawings of the three types are shown on the attached leaflet, which also includes a condensed description of the spiral design.

TYPE I - In the Type I, both fluids are in a spiral flow; that is, one fluid enters at a center nozzle and flows in a spiral path around the axis of the unit outward to a peripheral outlet nozzle, the cool fluid enters at a peripheral nozzle and flows in a spiral path around the axis inward to a center outlet nozzle. The normal relationship of flows is for the hot fluid to enter a a center nozzle and the cool fluid to enter at a peripheral nozzle.

In a Type I exchanger, the suffix "H" designates a unit set on its horizontal axis. The suffix "V" designates a unit set on its vertical axis. The addition of suffix "C" designates a unit where one spiral passage is welded shut on both sides; that is, the passage so welded would be similar to a Bourdon tube. The Type I-V and Type I-V-C can be used for liquid to vapor service as well as liquid to liquid service.

TYPE II - Type II is generally furnished for cooling relatively large volumes of saturated gas, condensing or partially condensing vapors with a high percentage of fixed gases, and occasionally for liquid to liquid service where flow rate of one liquid is many times greater than the other.

In the Type II, one passage is welded shut with a liquid in a spiral flow in this passage and the other fluid in cross-flow through the open spiral annulus and parallel to the axis of the exchanger. The standard setting for the Type II exchanger is one its vertical axis and it is equipped with an upper and lower dome. The cooling liquid enters at the periphery and flows in a spiral path to the center of the spiral element and leaves through an outlet nozzle brought through the side of the upper dome. Gases or vapor enter through the nozzle of the upper dome and the fixed gases or partially condensed vapors leave through the horizontal outlet nozzle in the bottom dome, with the condensate draining through the bottom vertical nozzle in the lower dome.

TYPE III - The Type III Spiral Exchanger is essentially a condenser with an inbuilt after cooler for fixed gases and condensate. This type

STLCOPCB4061210

is set on its vertical axis and is equipped with a vapor inlet dome on top and a flat cover on the bottom to seal the liquid passage.

Cooling liquid enters at a peripheral nozzle and flows inward in a spiral path around the vertical axis and leaves through an outlet nozzle coming through the top of the dome. The dome is shaped to distribute vapor uniformly into the open spiral turns; the broad flange of the dome covers several outer spiral turns to provide a passage of relatively smaller cross section for the non-condensables. Condensate drops quickly to the bottom of the vapor passage and flows in a spiral path outward counter-flow to the coolant to the periphery where the sub-cooled condensate leaves through a bottom vertical nozzle and the fixed sub-cooled gases leave through a horizontal outlet nozzle high on the peripheral header. The suffix "C" for a Type III designates a unit with the liquid passage welded shut on both sides in which arrangement the flat bottom cover seals the vapor and condensate passage.

CONNECTIONS

A brass plate is permanently attached at each nozzle designating the hot and cold side connections (also, respective drains when furnished.)

ACCESS

Type I-H and TYPE I-V

The removal of a cover exposes the full length of a respective fluid passage for inspection or cleaning. A center nozzle is integral with each cover and this nozzle will serve to identify the passage that would be exposed by the removal of a cover.

CAUTION - DO NOT REMOVE COVER WHILE THERE IS PRESSURE IN THE OPPOSITE PASSAGE; SUCH PRESSURE FROM THE OPPOSITE SIDE WILL CAUSE THE SPIRAL ELEMENT TO TELESCOPE OUTWARD.

TYPE I-H-C and TYPE I-V-C

The spiral passage welded shut is not accessible for inspection or mechanical cleaning and both covers seal the spiral passage on the other side. (The Type I-H-C and Type I-V-C is usually furnished for handling a toxic fluid or one which is difficult to gasket.)

TYPE II

The spiral liquid passage is welded shut and is not accessible for inspection or mechanical cleaning. Removal of either the upper or lower dome allows access to the spiral annulus on the other side.

TYPE III

Removal of the upper vapor dome gives full access to the vapor side, removal of the bottom cover gives full access to the liquid passage. In Type III-C, the liquid passage is welded shut and not accessible for inspection or mechanical cleaning. Removal of either the vapor dome or the bottom cover gives access to the vapor side.

CAUTION: DO NOT REMOVE THE DOME OR COVER WHILE THERE IS PRESSURE ON THE OPPOSITE SIDE; SUCH PRESSURE FROM THE OPPOSITE SIDE COULD CAUSE THE SPIRAL ELEMENT TO TELESCOPE OUTWARD.

STLCOPCB4061211

FLAT COVERS

Flat covers are double-cone reinforced for stiffening and each cover is machined slightly conical so that when bolted the cover is pre-stressed to eliminate deflection under maximum operating pressure. When the spiral heating surfaces are alloy metal, the cover is faced with the same alloy.

NOTE: For Types I-H-C and I-V-C, it is necessary to attach the nozzle to the respective center compartment of the spiral body and, therefore, the nozzle is not integral with the cover. In these types there is an opening in the center of the cover through which the nozzle passes and a central ring of studs is attached to the spiral center compartment to seal the cover at this joint.

GASKETS

Spiral Exchangers are equipped with two general types of gaskets.

The normal type is compressed asbestos sheet gasket which is cemented to the face of the cover with "Bostick" #4584 rubber cement. This gasket serves two purposes: (1) To seal the cover at the peripheral flange member of the spiral body, (2) To seal the spiral passage by contact with the edges of the spiral plate so there will be no by-passing of fluid from turn to turn of the spiral passage.
NOTE: The cover gasket is not required to seal against interleakage of media; interleakage is prevented by welding shut the corresponding side of the passage which is opposite the passage sealed by the cover.

(For replacement or spare gaskets, it is more economical for the user to purchase the sheet gasket directly from the manufacturer of this material. The type, grade, and dimensions of the cover gaskets are listed in the heading of these instructions.
NOTE: Covers are not truly circular at the periphery, therefore, a new gasket must be trimmed flush with the edge of the cover.)

Where non-metallic sheet gasketing is not suitable for contact with a fluid, a "Flexitallic" ring type metal gasket is provided. A 1/8" thick disc of metal is fitted inside of the "Flexitallic" ring gasket to function as a stop in compressing the metal gasket and also to make contact with the edge of the spiral plate to seal against by-passing as described above for non-metallic sheet gasketing.

("Flexitallic" replacement or spare gaskets should be ordered from American Heat Reclaiming Corporation and identified by the reference number and serial number shown on the nameplate on the exchanger or as listed in the heading of these instructions.)

BOLTING

Bolts should not be tightened more than necessary to prevent seepage. (Excessive bolting stresses shorten the life of the gasket.) Bolt tightening should follow standard procedure; pull up moderately on two diametrically opposite bolts and then the same on two diametrically opposite bolts which are at right angles to the first pair. Follow this procedure of pulling up on opposite bolts which are equidistant between the bolts already pulled up.

STLCOPCB4061212

DRAINING

All spiral types, except Type I-H and Type I-H-C are in a vertical setting and equipped with drains for each passage. In the Type I-H, the respective covers are loosened and the fluid drained into the trough or other provisions on the floor. In Type I-H-C, where one passage is welded shut, only the passage sealed by both covers can be drained. The passage welded shut must be blown out.

CLEANING

Acid washing, a high-velocity flush, or back-wash are recommended. The "single pipe" effect of the spiral passage insures that the solvent or flushing liquid effectively contacts any deposits on the heating surfaces. Mechanical cleaning can be done by removing the respective cover and scraping the affected zones.

TESTING

For thorough testing, the exchanger should be arranged on its vertical axis. Drain both passages. Remove the upper cover. Fasten hold-down bars or a strong-back across the open spiral end. Introduce compressed air in the closed passage up to 15-20 psig. Slowly fill the opened spiral passage with water. If there is a leak, the action of the air on the rising water level will show the location and magnitude of the leak.

In reporting any leakage to American Heat Reclaiming Corporation, the following information is required:

1) Exposed passage to which water has been introduced. (Hot side or cold side?)

2) Number of turns in from the periphery (count only the open turns.)

3) Number of turns out from the periphery (count only the open turns.)

4) Approximate "o'clock" from the peripheral nozzle of the opened passage with the nozzle assumed to be 12 o'clock.

5) Approximate distance down from the face of the opened passage.

6) Nature and magnitude of leak (pinholes, crack, open fracture?)

We urge prompt reporting to us of any interleakage encountered so that we may recommend the best procedure to be followed.

STLCOPCB4061213

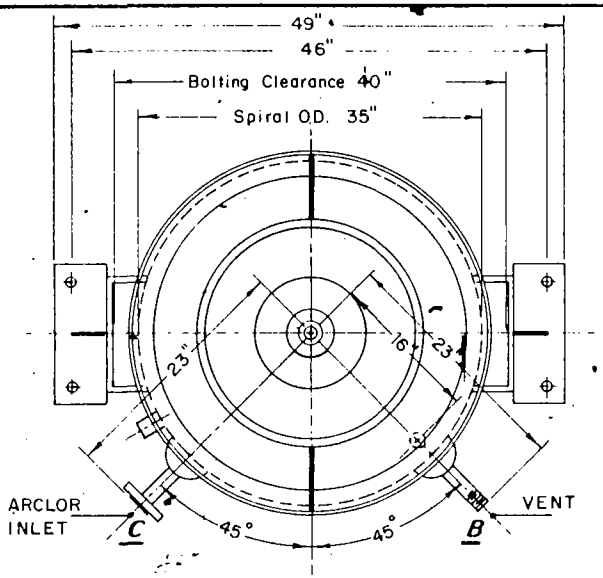

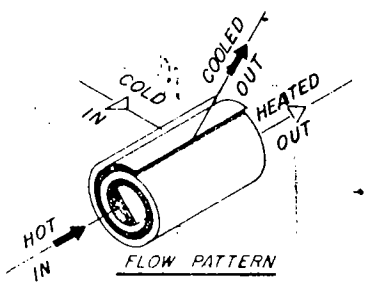

FLOW PATTERN

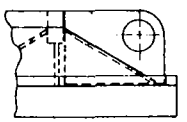

UNIT LIFT LUG

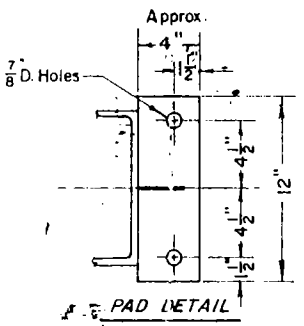

PAD DETAIL

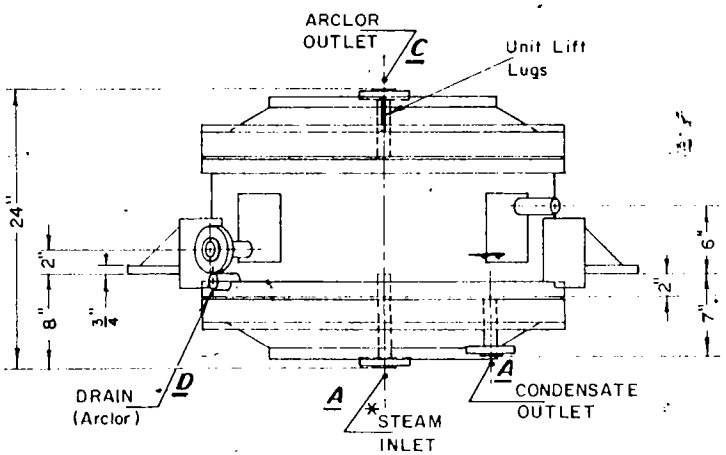

*Extended In Center 2" To Form Cond. Dam

Weight, Flooded - Approx	3350 #
Weight, Empty - Approx	3200 #
Test Press (Both Sides)	330 PSI
Design Press (Both Sides)	220 PSI
Design Temp (Both Sides)	400 ° F.
Inner Channel (Hot Side)	3/16"
Outer Channel (Cold Side) Alternate Channels Welded	3/16"
Spiral Material Thickness - Min. .25" Max. .3125" X 12" W	
Spiral Material, Except As Noted SA-212	

NOTE:

ALL HEADS SA-285 FBQ-C
GASKETS - Hot Cover, COMP. ASBESTOS
GASKETS - Cold Cover, TEFLON IMPREGNATED ASBESTOS
ALL FLANGES SA-181, 300# ASA
HOOKBOLT ASSY. 24 PER COVER, 1" D X 7" LG
PAINT - MFG. STD. CARBOLINE NO. 3903-56

TOLERANCE ON ALL DIMENSIONS ± 1/8" EXCEPT DIAMETER AND ANGULAR DIMENSIONS
BOLT HOLES TO STRADDLE SHOWN CENTER LINES
FOR WELD DETAILS SEE DWG. D-48

NOZZLE SCHEDULE

ALL NOZZLES SA-106, Sch. 40

DSW 256334

MARK	NO REQ'D	SIZE	RATING	FACING	REMARKS
H					
G					
F					
E					
D	1	1"	3000#	Cplg.	Plugged
C	2	1"	300#	R.F.	
B	1	1"		N.P.T.	
A	2	1"	300#	R.F.	

CERTIFIED PRINT FOR
MONSANTO CO.
Approved For Fabrication Or Erection
By _____ Date 8-28-67

DESIGNED CONSTRUCTED AND STAMPED IN ACCORDANCE WITH A.S.M.E. CODE SEC. VIII - 1965

DATE	SYM	REVISION	BY

AMERICAN HEAT RECLAIMING CORP.
NEW YORK, N. Y.

CUSTOMER: MONSANTO CO.
ORDER NO. 5334-B-08502 ITEM NO.
150 SQ FT. SPIRAL HEAT EXCHANGER
DWN. BY JSG CHK'D. APP'D JOB NO. AS-3276
DATE 8/25/67 MFG. NO. 6389 Type 1-V

STLCOPCB4061214

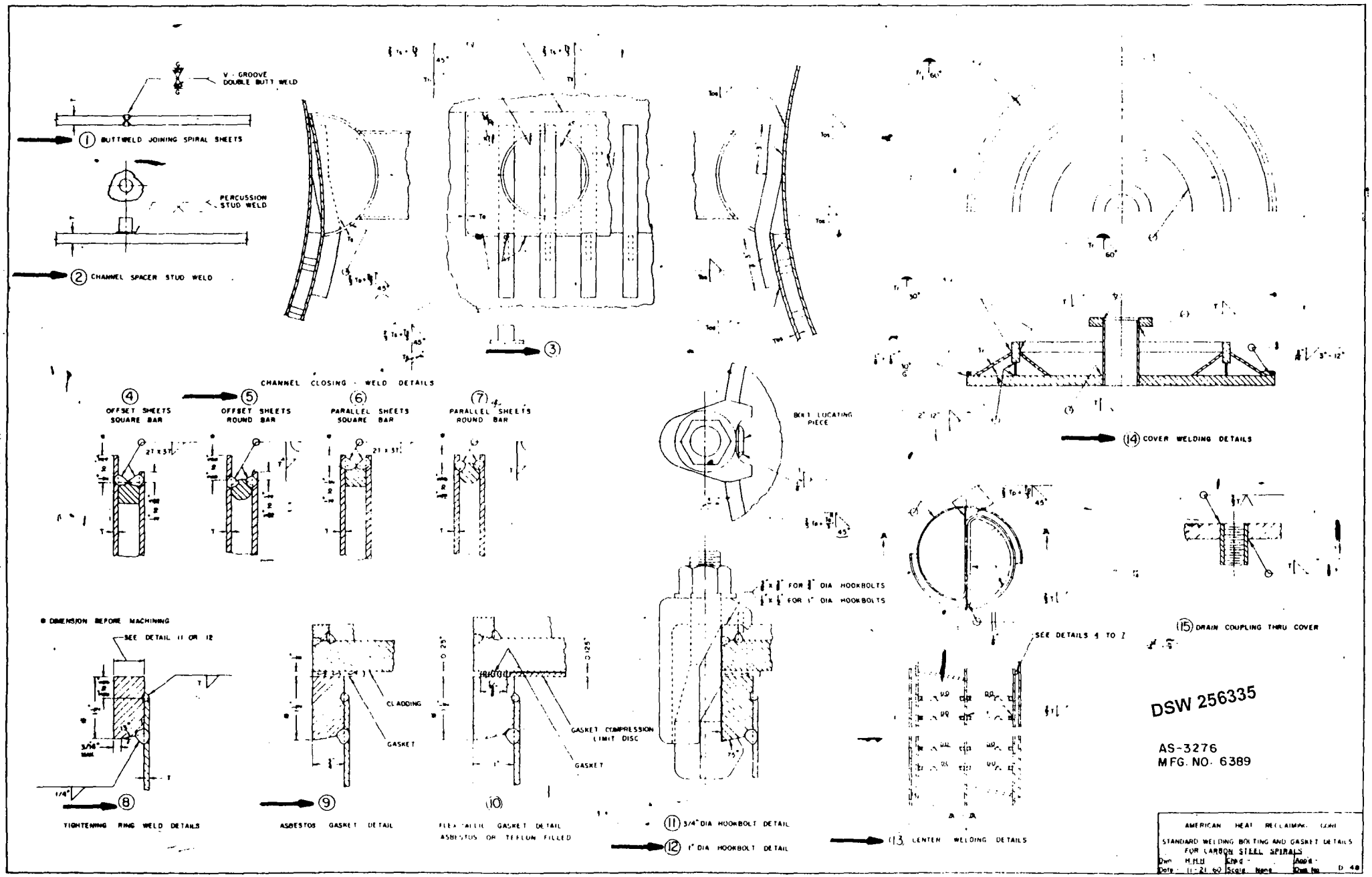

STLCOPCB4061215