PLAINTIFF'S EXHIBIT

ASI-490

AMERICAN STANDARD

V-3 OIL BOILER

INSTRUCTION MANUAL

NON-PACKAGED BOILER ONLY UNITS AND BOILER-BURNER UNITS

NOTICE TO INSTALLER AND OPERATOR

THIS BOOKLET MUST BE AFFIXED ON OR ADJACENT TO THE HEATING EQUIPMENT.

FORM NO. BP-33414

SERIES NO. 1B-J1

05538

V-3 Non Pkgd. Blr.

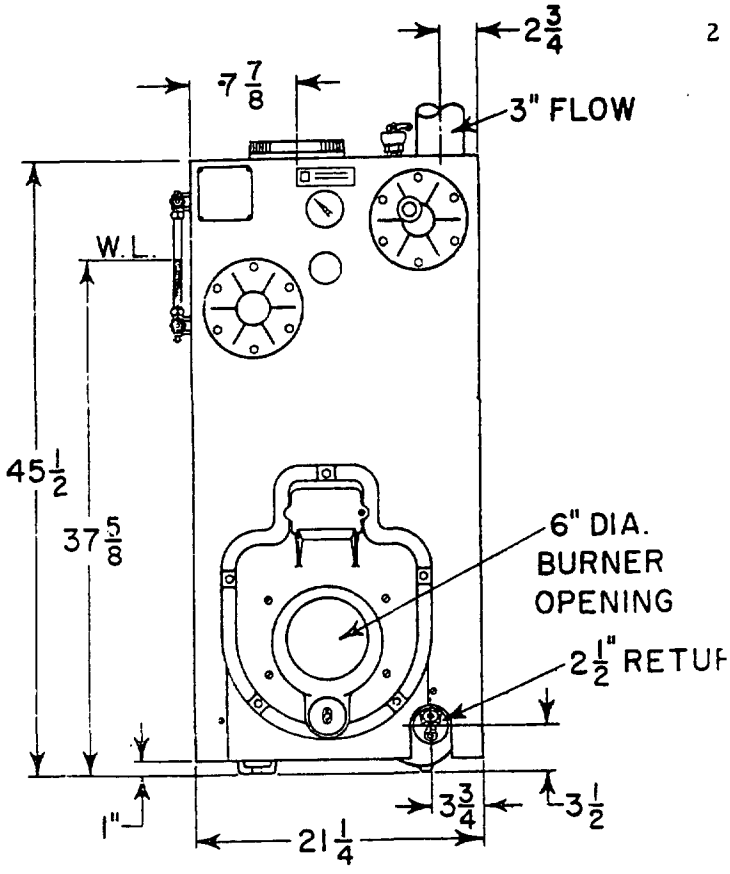

FRONT VIEW
FLUSH JACKET

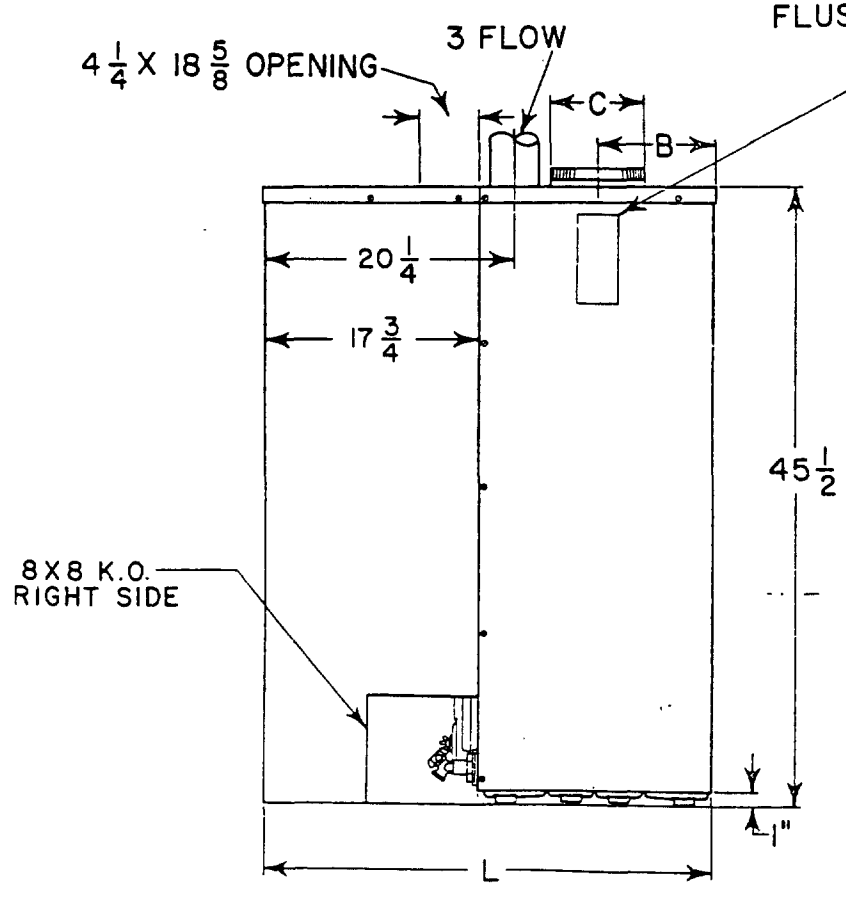

NUMBER OF SECTIONS	DIMENSIONS		
	B	C	L
3	8 1/2	6	34 1/4
4	11 1/2	7	40 1/4
5	14 1/2	8	46 1/4
6	17 1/2	9	52 1/4

05539

SIDE VIEW EXTENDED JACKET

[illegible] contains two areas of [illegible] and instructions [illegible] water [illegible]

[illegible]

[illegible] either a steam, forced or [illegible] base boiler with outputs ranging [illegible] boiler burner units, and 92 MBH to 248 [illegible] arrangement begins with three sections [illegible]

[illegible] domestic hot water boils. [illegible] is provided below [illegible] is inserted here for [illegible] the top of the boiler [illegible]

[illegible]

[illegible] the [illegible] have been [illegible]. The boiler [illegible] possible to the [illegible], with adequate [illegible] removal of a water heater, when necessary. [illegible]

[illegible] should be taken. [illegible] tank being [illegible] piping leading to [illegible] In addition, [illegible] piping, make sure [illegible]

[illegible] for the boiler-burner unit, see page 6. [illegible]

05540

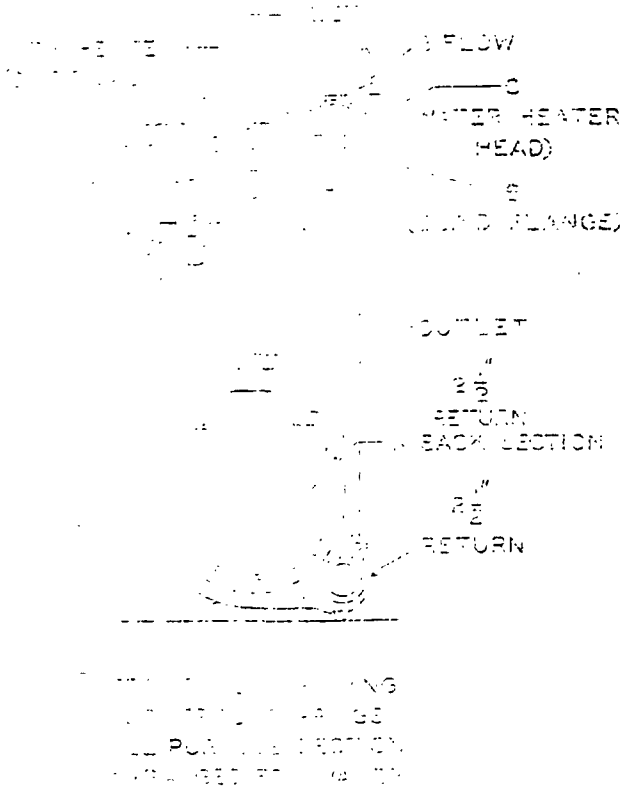

Figure 1

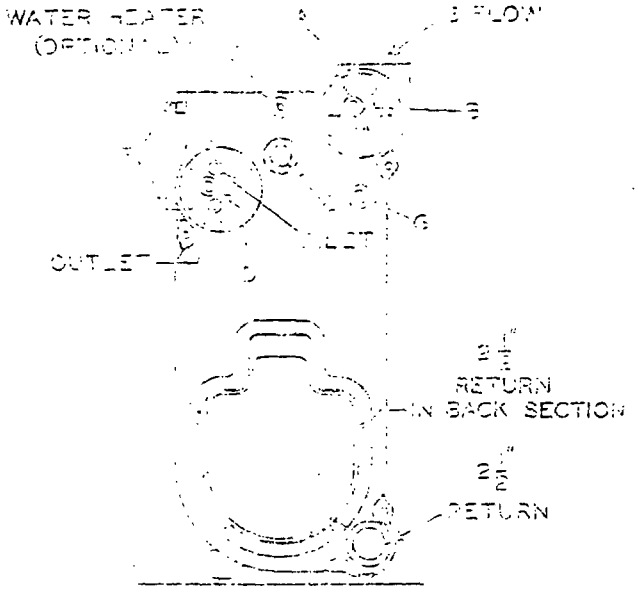

FRONT VIEW-SHOWING
CONTROL TAPPINGS
ALL PURPOSE SECTION
ARRANGED FOR STEAM

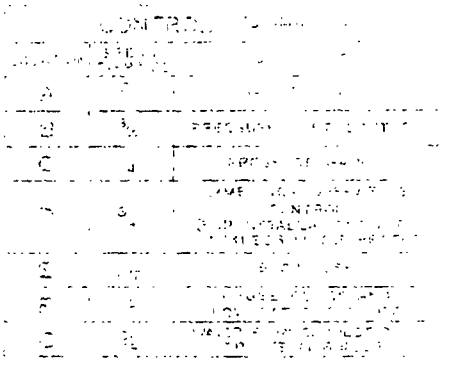

Figure 2

I=B=R Ratings and Firing Rates

Boiler Burner Units

o. of ect.	Model* Number	Burner Used	I B=R Burner Capacity (GPH)	Nozzle Used	I=B R Gross Output (MBH)	Net Installed Rad.-Water (MBH)	Net Installed Rad.-Steam Sq. Ft.	Tankless Heater Number	**Tankless Heater Rating Steam (GPM)	**Tankless Heater Rating Water (GPM)	I=B=R Nominal Chimney Size	Approx. Shipping Weight Non-Packag Boiler Burner Unit
3	V3-116	DH-4F1	1.05	1.00-90ES	116	100.9	363.0	222	4-1/4	4-3/4	8x8x15	613
3	V3-128	DH-4F1	1.15	1.10-80ES	128	111.3	400.0	222	4-1/4	4-3/4	8x8x15	613
4	V3-172	DH-5F2	1.55	1.50-80 FS	172	149.6	538.0	226	5-1/4	5-3/4	8x8x15	790
4	V3-186	DH-5F2	1.70	1.65-70 FS	186	161.7	581.5	226	5-1/4	5-3/4	8x8x15	790
5	V3-228	DH-5F3	2.10	2.00-70 B	228	198.3	713.0	232	6-1/4	7	8x8x15	967
5	V3-244	DH-5F3	2.25	2.25-70 B	244	212.2	763.0	232	6-1/4	7	8x12x15	967
6	V3-284	DH-5F3	2.60	2.50-70 B	284	247.0	888.0	445	7-1/4	8-1/4	8x12x15	1,144
6	V3-302	DH-5F3	2.80	2.75-60 B	302	262.6	944.0	445	7-1/4	8-1/4	8x12x15	1,144

05543

*"WB" WILL IMPLY WATER APPLICATION

"SB" WILL IMPLY STEAM APPLICATION

SUFFIX "B" IMPLIES BOILER BURNER UNITS

FOR BOILER WITH TANKLESS HEATER ADD SUFFIX "T"

I.E.

V3-116WBT or V3-116WB

** "Gallons per minute of water heated from 40 degrees F to 140 degrees F with 200 degrees F boiler water."

05544

I B R Ratings and Firing Rates

Boiler Only Units

No. of Sect	Model	Burner	I B R Burner Capacity (GPH)	Nozzle Used	I B R Gross Output (MBH)	Net Installed Rad.-Water (MBH)	Net Installed Rad. Steam (MBH)	Tankless Heater Number	**Tankless Heater Rating Steam (GPM)	**Tankless Heater Rating Water (GPM)	I B R Nominal Chimney Size	Approx. Shipping Weight Non-Fuel Boiler Burner [illegible]
2	V3M-92	DH-5(1)	.85	.85-70W	92	80.0	69.0	222	4	1-1/2	8x8x15	61[illegible]
2	V3M-110	DH-5(1)	1.00	1.00-70W	110	95.7	82.5	222	1	4-1/2	8x8x15	61[illegible]
[illegible]	[illegible]	[illegible]	[illegible]	1.25-70B	1[illegible]	120.0	10[illegible].5	[illegible]	5	5-1/2	8x8x15	79[illegible]
[illegible]	V3M-156	DH-5(2)	[illegible]	1.35-70B	156	135.7	117.0	[illegible]	5	5-1/2	8x8x15	[illegible]
[illegible]	V3M-184	DH-5(2)	[illegible]	1.65-70[illegible]	[illegible]	160.0	138.0	[illegible]	6	6-3/4	8x8x15	[illegible]
[illegible]	V3M-202	DH-5(2)	[illegible]	1.75-70B	202	175.7	151.5	[illegible]	6	6-3/4	8x8x15	[illegible]
6	V3M-230	DH-5(3)	[illegible]	2.00-70B	230	200.0	172.5	[illegible]	7	7-3/4	8x12x15	1,[illegible]
6	V3M-248	DH-5(3)	2.[illegible]	2.[illegible]	[illegible]	[illegible].7	186.0	[illegible]	7	7-3/4	8x12x15	1,[illegible]

[illegible] WILL IMPLY WATER APPLICATION

5" WILL IMPLY STEAM APPLICATION

** "Gallons per minute of water heated from 40 degrees F to 140 degrees F with 200 degrees F boiler water

FOR BOILER WITH TANKLESS HEATER ADD SUFFIX "T"

I.F

[illegible] or V3M [illegible]

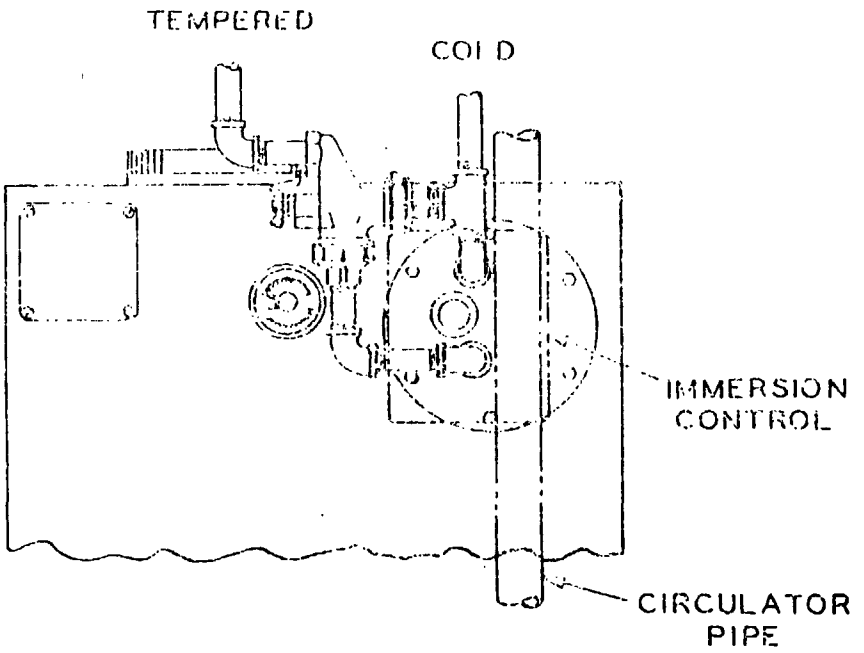

PARTIAL VIEW SHOWING PIPING FROM WATER HEATER TO MIXING VALVE

[illegible] AT INSTALLATION SITE

[illegible] installed, or if it [illegible] installation site, the [illegible] tile base, preferably [illegible] extension is to be used, [illegible] accordingly.

[illegible] have been taken, the boiler components [illegible] assembled, and installed in accordance [illegible]

INSTALLATION INSTRUCTIONS - FOR WATER BOILERS

[illegible] boiler to the heating system, and prior to [illegible] plug tappings, fill system with water (See Figure [illegible]) [illegible] not less than [illegible] lbs. nor more than [illegible] and piping for leaks. Do not install [illegible].

1. [illegible] joints with boiler [illegible] which is packed with the boiler [illegible] around canopy and cleanout cover plate, if putty seal [illegible] damaged through handling.

3. Remove [illegible] canopy (packed with jacket) and apply to canopy [illegible] instructions in the [illegible].

4. [illegible] in position on top of boiler, then connect [illegible]. Place the front jacket panel in position by sliding [illegible] of the burner plate.

5. Assemble [illegible] jacket panels to the front panel with #10 [illegible]. The design of the jacket provides for a [illegible] the jacket above the floor. It is recommended [illegible] each side panel near the rear, [illegible] the jacket assembly is complete. Leave all jacket [illegible] until jacket is fully assembled, then tighten.

6. Assemble the [illegible] to the rear flange of the two side panels [illegible] metal screws.

7. Assemble the [illegible] of the side panels using #10 x 1/2" sheet metal screws. A [illegible] is provided in the top panel to permit assembly [illegible] supply pipe is connected to the supply tapping.

8. If a circulator [illegible] installed in the return line and enclosed by a [illegible] (furnished on special order only), pipe fittings [illegible] do not project beyond either side of the [illegible].

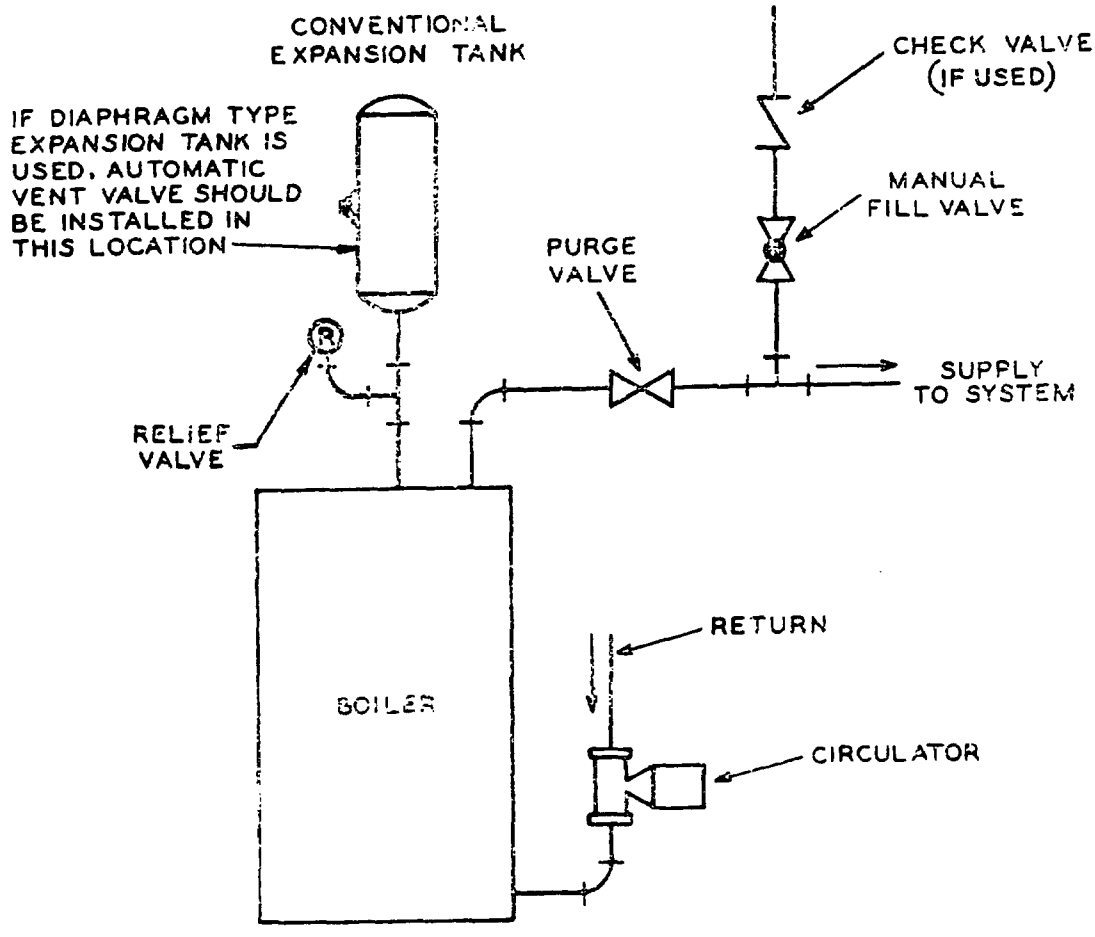

PROCEDURE FOR FILLING SERIES LOOP HEATRIM SYSTEM

1. Open fill valve.
2. Close purge valve.
3. Vent air from boiler by manually opening relief valve.
4. When water appears at relief valve, release lever and allow to close
5. Continue filling until pressure gauge reads approximately 12 pounds (Close fill valve)
6. Open purge valve.

Note: For a single loop heatrim system no additional vents, cocks, valves, drains, or other accessories are required except: When tankless heater is used and heatrim is above the boiler outlet, install a flow check valve to prevent gravity circulation.

Figure 3

9. Install the altitude and temperature gauge in the 1/4" tapping on the face of the front section before installing any other controls (See Figure 4).

10. Mount the oil burner on the burner brackets provided on the burner plate and complete the installation in accordance with the instructions furnished with the burner. Pressure ring for the burner is packed in jacket box.

11. Install relief valve.

12. Install the flue pipe and draft stabilizer using instructions provided with the stabilizer. The flue pipe should not extend beyond the inside wall of the chimney flue. Horizontal runs of flue pipe should be kept at a minimum with approximately 1/4" pitch per foot maintained.

13. Install room thermostat and run electric service line from switch (not supplied by American-Standard). Make all wiring connections to controls in accordance with wiring diagram in control package.

When making piping connections to the circulator (if used) be sure that the flange gasket is not damaged, and that the bolts are equally tightened. See decal on circulator for lubrication instructions.

Never start boiler unless it is properly filled. After boiler is in operation, makeup water should be added slowly.

Open systems should be filled to 1/3 height of the expansion tank.

When filling a closed hot water system, care should be taken to insure that the pressure does not exceed 30 lbs. If pressure does exceed 30 lbs. and the relief valve does not open, pressure must be relieved immediately, and relief valve failure investigated and corrected; otherwise high pressure might build up while the boiler is in operation and cause damage to the heating system.

CARE OF THE BOILER WHEN NOT IN OPERATION

During extended periods when the boiler is not in use, such as summer months, the boiler and system should be kept filled. The only time a boiler should be drained, when not in use, is in the winter to prevent possible freezing.

In the fall it is advisable to drain a slight amount of water to remove sludge, taking care not to drain an over-amount.

COMBINATION ALTITUDE GAUGE AND THERMOMETER

To avoid damage to gauge or possible impairment of its accuracy, DO NOT INSTALL UNTIL BOILER OR SYSTEM HAS BEEN WATER TESTED FOR TIGHTNESS.

A combination gauge is used with water boilers and is connected into the tapping in the front section. This gauge serves these purposes:

1. Indicates temperature of the water in the boiler.
2. Indicates height of water level in feet above the gauge for OPEN SYSTEMS.
3. Indicates water pressure in pounds per square inch for CLOSED SYSTEMS where pressure is controlled by means of automatic relief or regulating valve.

CLEANING BOILER

At the end of the heating season, clean the boiler thoroughly and spray flue surfaces with light lubricating or crankcase oil, using gun with extended stem in order to reach inaccessible spaces.

Clean and remove the flue pipe, when feasible.

INSTALLATION INSTRUCTIONS - FOR STEAM BOILERS

1. Before connecting boiler to the heating system, plug tapped openings and install water heater (if used) in large nipple below water line. Install cover plates and gaskets in unused water heater openings. Fill boiler with water and subject it to not less than 10 lbs. nor more than 30 lbs. pressure. Inspect boiler for leaks. Do not install gauge until after boiler is tested.
2. Putty outside of sections at joints with boiler putty which is packed with the boiler. Also putty around canopy and cleanout cover plate, if putty seal has been damaged through handling.
3. Remove insulation for canopy (packed with jacket), and apply to canopy according to instructions in the jacket box.
4. Place the top jacket panel in position on top of boiler, then connect the supply and return piping. Place the front jacket panel in position by sliding it under the flange of the burner plate.
5. Assemble right and left side jacket panels to the front panel with #10 x 1/2" sheet metal screws. The design of the jacket provides for a one-inch clearance of the jacket above the floor. It is recommended that a suitable support be placed under each side panel near the rear, and left in position until the jacket assembly is complete. Leave all jacket screws loose until jacket is fully assembled, then tighten.

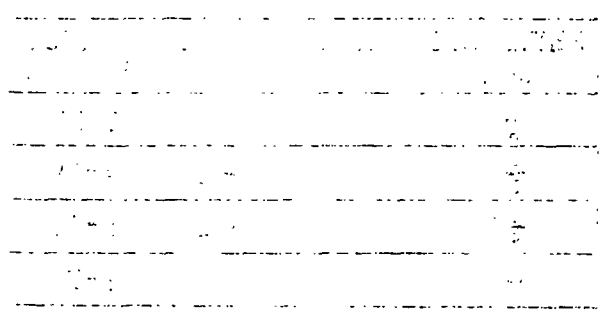

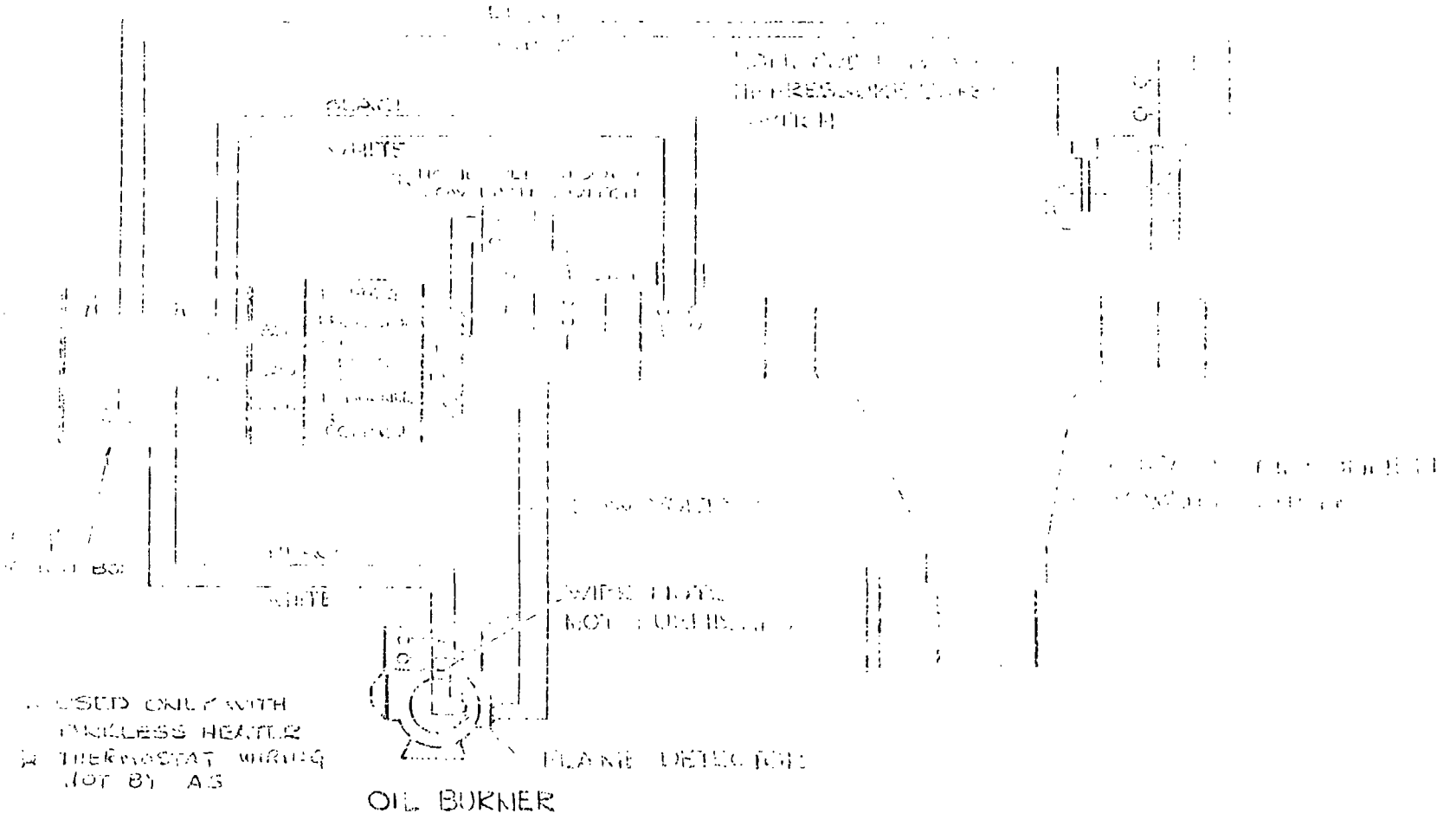
USED ONLY WITH
CORDLESS HEATER
THERMOSTAT WIRING
(NOT BY AS
OIL BURNER

Figure 6

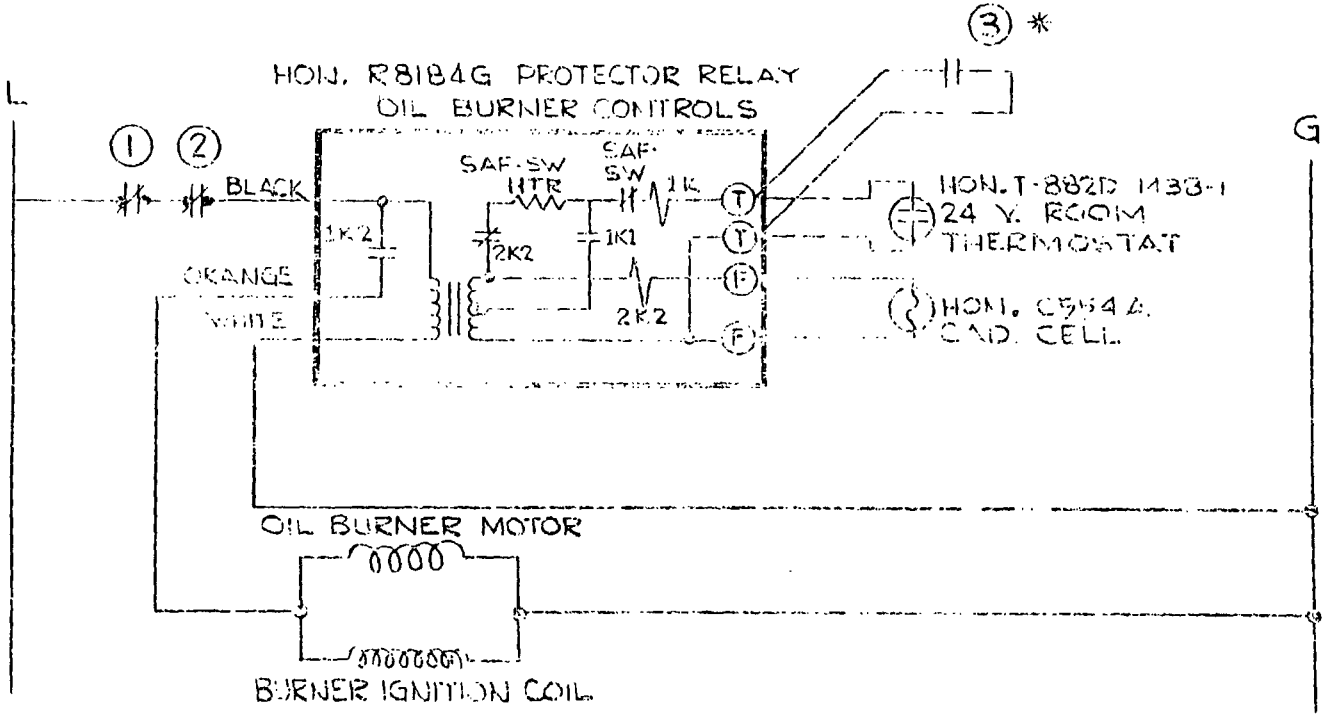

① HONEYWELL PA 404A PRESSURETROL (HI-PRESS. SW.)
② Mc DONNELL NO. 67 AR LOW WATER CUT-OFF
*③ HONEYWELL L4006A LOW LIMIT SWITCH, USED ONLY WITH TANKLESS HEATER.

CLEANING STEAM BOILER

The grease used to lubricate the cutting tools during erection of new piping systems serves as a carrier for sand and dirt, with the result that a scum of fine particles and grease accumulates on the surface of the water in all new boilers while heavier particles may settle to the bottom of the boiler and form sludge. These impurities tend to cause foaming, preventing the generation of steam and causing an unsteady water line.

This unavoidable accumulation of oil and grease should be removed by blowing-off the boiler as follows: If not already provided, install a surface blow connection of at least 1-1/4" nominal pipe size with outlet extended to within [illegible] of the floor or to sewer, inserting a valve in line close to boiler, [illegible] the water line to center of outlet, raise steam pressure, and [illegible] during open valve in blow-off line. When pressure recedes, close valve and repeat process adding water at intervals to maintain proper level. [illegible] final operation, bring the pressure in the boiler to about 10 [illegible], [illegible] blow-off, stop burner, and open drain valve. After boiler has cooled, [illegible] fill and flush out several times before filling it to proper level for normal service. The use of soda or any alkali, vinegar or any acid is not recommended for cleaning heating boilers because of the difficulty of complete removal and the possibility of subsequent injury after the cleaning process has been completed.

WATER AND STEAM BOILER CONSTRUCTION DETAILS

Cored Section Castings. [illegible] cored section castings are used to make up the V-3 All-Purpose boiler.

1. Front section [illegible] supply tapping.
2. Back section.
3. Six-inch wide center section.

COMBUSTION CHAMBER

The V-3 Boiler has a [illegible] pre-cast Refractory Target Wall, specially designed for maximum performance and efficiency with a flame retention burner. The V-3M Boiler Only Unit employs a full refractory chamber for non-flame retention type burners. Figure 8 shows the target wall for the boiler burner units, although all dimensions are applicable to both [illegible] arrangements.

V-3 Non Pkgd. Blr.

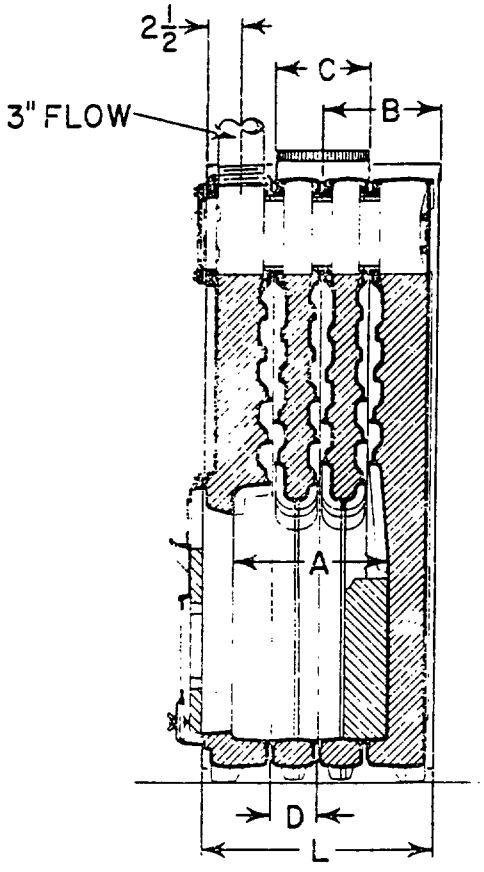

SECTION THRU BOILER

NUMBER OF SECTIONS	DIMENSIONS				
	A	B	C	D	L
3	10 3/8	8 1/2	6	6	16 1/2
4	16 3/8	11 1/2	7	6	22 1/2
5	22 3/8	14 1/2	8	6	28 1/2
6	28 3/8	17 1/2	9	6	34 1/2

Figure 8

Oil Burner - This boiler has been engineered to give maximum performance with the DM-T flame retention burner for boiler-burner units. The conventional type burner to be used in the boiler only units.

Controls - The All-Purpose boiler will make use of a light-sensing primary control; other than this, the controls for this boiler are conventional. Locations are shown on Figure 1 for water, and Figure 2 for steam.

Jacket - The jacket design is conventional with other boilers of the American-Standard line.

Burner Plate and Door - These are integral components and are made of cast iron with the requirement of a radiation shield for the boiler only units. The boiler-burner units do not require the use of the radiation shield.

Canopy - An aluminized sheet steel canopy is provided. Smokepipe sizes are as follows.

No. of Sections	Smokepipe Size
3	6 inches
4	7 inches
5	8 inches
6	9 inches

Insulation - The entire jacket is insulated with 1/2" fiberglass. An additional one-inch fiberglass is used on the canopy; no additional insulation is required.

V-3 Non Pkgd. Htr.

CAUTION TO INSTALLER AND OWNER

This hydronic heating boiler incorporates the best in engineering and manufacturing techniques and will give years of good service and trouble-free operation if properly treated.

The heat transfer surface has been carefully designed to give optimum performance and reliability. However, the presence of contaminants such as scale, sediment and boiler sealing compounds in the section waterways may serve to insulate the heat transfer surface and cause premature failure of the sections.

Scale build-up can be prevented by good installation practices which eliminate addition of makeup water to the system.

Sediment which may accumulate in the boiler should be flushed out on a regular basis in accordance with recommended maintenance practices.

Occasionally, leaks will be detected in the system. These leaks are usually of such a nature that they may be prevented or corrected by good workmanship. Every effort should be made to correct them without the use of boiler sealing compounds. If sealing compounds are used, they should be used as sparingly as possible and never in excess of the manufacturer's recommendations. Following their use the boiler must be thoroughly flushed out. Otherwise, serious damage may result.

In some special installations, glycol anti-freeze is added to the water in the system to protect against freezing during cold weather when the boiler is not being fired and the system is not drained. Although American Standard cannot recommend this practice, we recognize that glycol anti-freeze will occasionally be used. Heat transfer is poorer with glycol than with water. Therefore, glycol should never be used in greater quantity than 50% in the system; with any quantity, radiator output will be lower than with plain water. It is always better, when possible, to drain the entire system, rather than use anti-freeze; the heating system and house plumbing will not freeze while the heating system is operating; and plumbing is not protected if the heating system is not operating, whether or not anti-freeze is used.

Cast iron is highly resistant to corrosion. However, some propellants used in aerosol cans break down into p o ison gas and corrosive gas at high temperature: if aerosol mixtures are used near boilers, the aerosol will enter the boiler flame and be heated. Continued use of aerosol cans near heating systems may result in severe boiler heating surface corrosion and possible danger to health.

CONSUMER PROTECTION - WARRANTY

American-Standard products normally reach owners or consumer-users through an industry channel of distributors and plumbing and heating contractors. Experience has shown that claims of defects in our products generally relate to abuse or to other damage which occur after our sale and are not our responsibility. Since determining proper responsibility requires local inspection, our warranty (set forth below) extends only to our direct buyers; distributors are best equipped to obtain the facts underlying claims, to place responsibility where it belongs and to recommend/handle repair or replacement.

American-Standard warrants only to its distributors and other direct Buyers that it will furnish by freight a replacement for, or at its option repair, any product of its manufacture or part or portion thereof, proved to its satisfaction to be defective in material or workmanship under normal use and service within one year after installation.

THERE IS NO OTHER WARRANTY, EXPRESS OR IMPLIED, INCLUDING NO IMPLIED WARRANTY OF MERCHANTABILITY OR IMPLIED WARRANTY FOR FITNESS FOR A PARTICULAR PURPOSE AND AMERICAN-STANDARD WILL NOT BE RESPONSIBLE FOR ANY DAMAGES WHATSOEVER, NOR FOR LABOR OR TRANSPORTATION EXPENSES RELATING TO SUCH REPLACEMENT OR SUCH REPAIR, NOR WILL IT BE HELD RESPONSIBLE FOR WARRANTY ADJUSTMENTS COSTING MORE THAN THE PRICE OF THE PRODUCT TO ITS DISTRIBUTORS AND OTHER DIRECT BUYERS.

Goods of other manufacturers sold by American-Standard are not warranted unless accompanied by an express written warranty, but the Seller will endeavor to secure for its direct Buyers the benefits of warranties extended by such other manufacturers for such goods.

American-Standard is proud of its record for product quality and for fairness in handling warranty matters; and, if an ultimate user of our products should feel our warranty system described above does not work fairly in his case, he should write the Office of the President, Director of Consumer Affairs, U. S. Plumbing/Heating, American-Standard, 40 West 40th Street, New York, N. Y. 10018.

DEALER'S NAME: _____

ADDRESS: _____

TELEPHONE NO.: _____

DATE OF INSTALLATION: _____

AMERICAN STANDARD

PLUMBING & HEATING DIVISION

NEW BRUNSWICK, NEW JERSEY 08903