CONCEPTS



FROM THE AMERICAN PLYWOOD ASSOCIATION / FOR ARCHITECTS / ENGINEERS / BUILDERS

NUMBER 12

FIRE RESISTIVE PLYWOOD FLOORS AND ROOFS

NEW PLYWOOD CONSTRUCTIONS RECEIVE ONE-HOUR FIRE RATINGS

A wider selection of one-hour rated plywood systems is now available to architects and engineers. This means that economical plywood construction can be used in larger commercial buildings. Plywood stressed skin construction is included in these one-hour systems for the first time.

Plywood is now shown in 25 one-hour assemblies in the Underwriters' Laboratories "Building Materials List." Several of these are illustrated on the following pages. Ceilings are the primary variations in the other plywood assemblies listed.

CONSTRUCTIONS RECOGNIZED BY BUILDING CODES

The listing of these plywood assemblies is based on fire tests made at Underwriters' Laboratories in accordance with the Standard Fire Tests for Building Construction (ASTM E119). All major building codes (Uniform Building Code, Basic Building Code, Southern Standard Building Code and National Building Code) accept fire tests made in accordance with these tests.

Many building authorities had already recognized plywood in one-hour rated systems – the tests confirmed the adequacy of these constructions for this rating. The constructions listed provide several choices for designers. Variations are generally permitted, but should be confirmed with local building officials. Designs shown in the "Building Materials List" are referenced to serve as a guide for modifications.

ONE-HOUR CONSTRUCTION PERMITS AREA INCREASES

With one-hour construction, larger buildings may be built with plywood. Since plywood construction is commonly the most economical building method, this can save you money.

Consider a one-story school built outside the fire zone under the requirements of the Uniform Building Code. Where the school was built with one-hour frame walls and a one-hour plywood roof, each building could have an area of 15,700 sq. ft. between fire walls.

The same school built outside the fire zone under the requirements of the Basic Building Code could have the following areas when separated 30 ft. from other buildings. With one-hour frame walls and a plywood roof, maximum area is 15,300 sq. ft. per building. (When each classroom exits directly to the outside, this increases to 45,900 sq. ft.) When of Ordinary type construction with a one-hour plywood roof, maximum area is 20,000 sq. ft. per building. (When each classroom exits directly to the outside, this increases to 60,000 sq. ft.)

PLYWOOD QUALIFIES FOR HEAVY TIMBER ROOF CONSTRUCTION

Heavy timber construction is one of the oldest types of construction used in this country. The excellent fire endurance of this type construction has been demonstrated over a period of many years.

Now 1⅛" plywood can be used for roofs in the Heavy Timber classification. This makes this type construction even more economical and useful. Plywood's use in this type construction is illustrated on the back page.

PLAINTIFF'S EXHIBIT

GP-801

Additional information available from the American Plywood Association / Tacoma, Washington 98401

Copyright 1964 American Plywood Association

One-hour floor
A conventional plywood floor combines with fire resistive gypsum board in this one-hour rated assembly. Acoustical tile ceilings supported on splines can also be used.

One-hour roof
Most codes do not require the top layer of plywood and building paper when this assembly is used for one-hour roofs.

References
UL Design* No.'s 25, 33, 34, 41 (Gypsum board ceilings.)

UL Design* No.'s 9, 12, 15, 16, 20, 38 (Acoustical tile ceilings.)

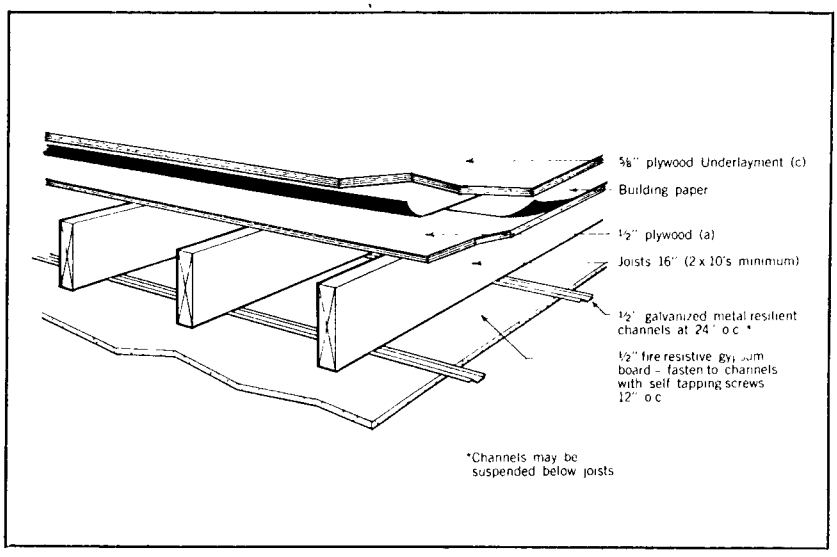

Figure 1. One-hour assembly – resilient channel ceiling system.

One-hour floor
Mineral acoustical ceiling panels are suspended below a conventional plywood floor in this one-hour construction. A T-bar grid suspension system carries the 2′ x 4′ acoustical panels.

One-hour roof
Most codes do not require the top layer of plywood and building paper when this assembly is used for one-hour roofs.

References
UL Design* No.'s 17, 21, 22, 23, 27, 30, 31, 36, 37, 39.

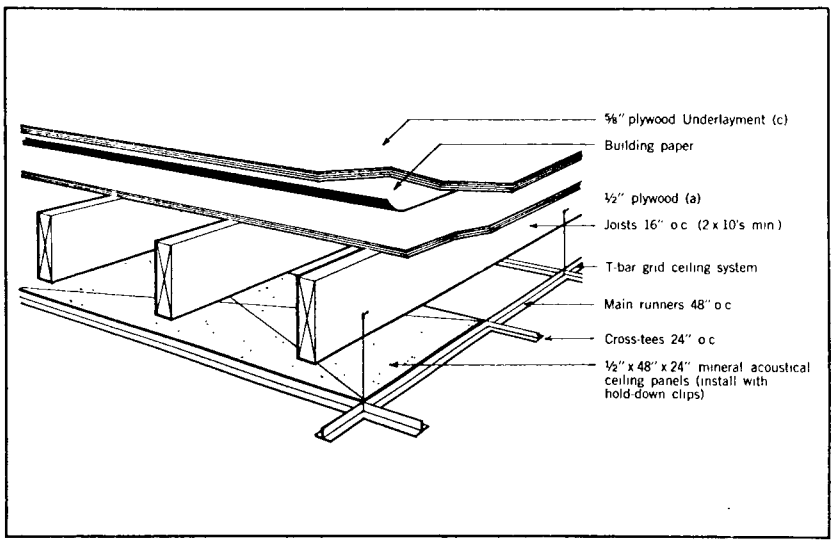

Figure 2. One-hour assembly – T-bar grid ceiling system.

One-hour floor
5/8″ gypsum board is attached directly to the underneath side of the joists in this construction. Similar constructions with 5/8″ plywood subflooring and 1/2″ plywood underlayment have been widely accepted for years because of similarity to other rated systems.

One-hour roof
Most codes do not require the top layer of plywood and building paper when this assembly is used for one-hour roofs.

References
UL Design* No.'s 1, 29, 42. Note: This construction is also recognized for 45 min. assembly (UL Design* 1) and 30 min. assemblies (UL Designs* 1 and 2) with a 1/2″ or less gypsum board ceilings.

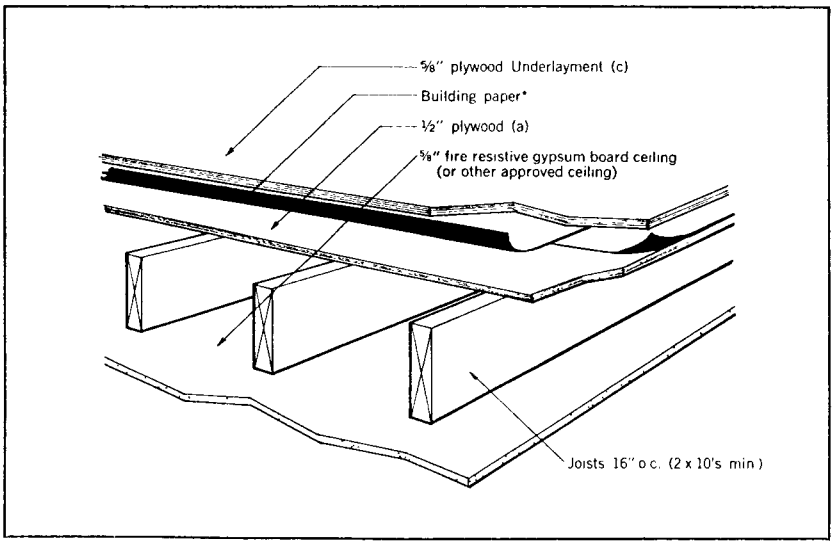

Figure 3. One-hour assembly – ceiling attached directly to joists.

*See Underwriters' Laboratories, Inc. "Building Materials List" Class E-1 designs.

SGP 0025269

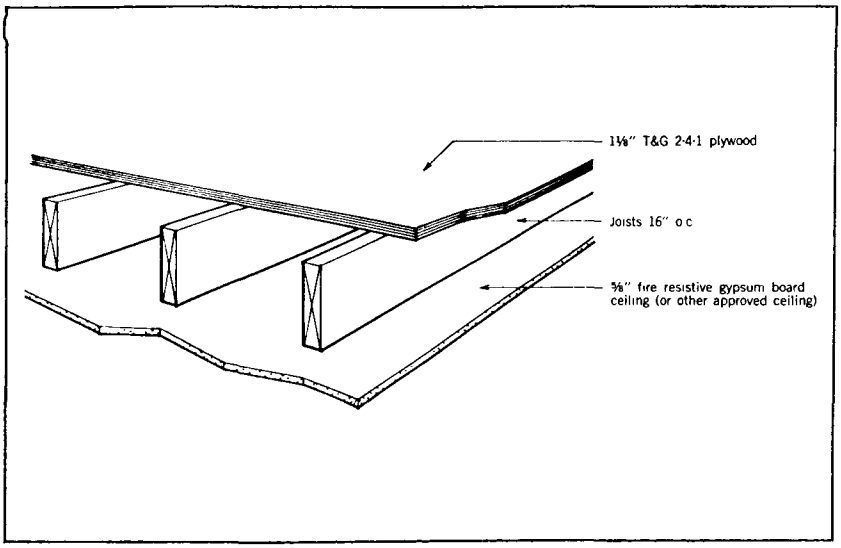

Figure 4. One-hour assembly – 1⅛" p ywood with joists 16" o.c.

One-hour floor

2•4•1 is recognized in one-hour constructions because its 1⅛" thickness is equivalent to other recognized two-layer plywood systems. A gypsum board ceiling is applied directly to the underside of the joists in this system.

One-hour roof

This same construction is recognized for one-hour roofs.

References

ICBO Research Recommendation 1007.9.

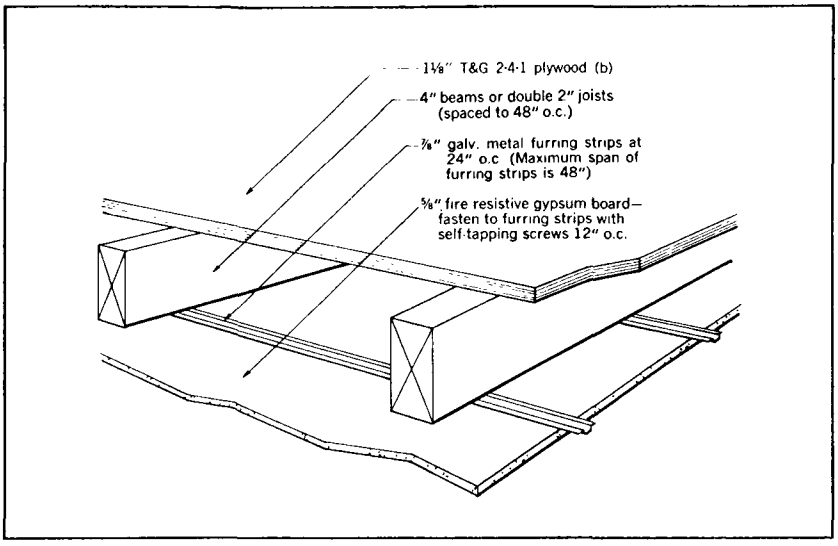

Figure 5. One-hour assembly – 1⅛" plywood with beams 48" o.c.

One-hour floor

1⅛" 2•4•1 over beams 48" o.c. and ⅝" fire resistive gypsum board are the basic elements in this one-hour construction. The metal furring strips carry the ceiling across a maximum beam spacing of 48".

One-hour roof

This same system is well suited for one-hour roofs.

References

UL Design* No. 28.

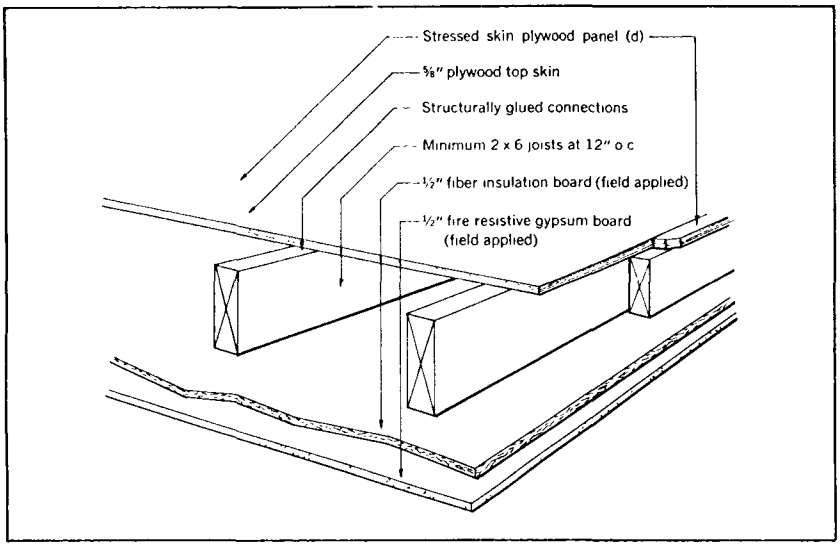

Figure 6. One-hour stressed skin plywood construction.

One-hour floor

This plywood stressed skin construction is the thinnest one-hour combustible assembly which has passed Underwriters' Laboratories tests. The layers of fiber insulation board and fire-resistive gypsum board are applied in the field.

One-hour roof

This same system is well suited for one-hour roofs.

References

UL Design* No. 47 (to be published in future edition of "Building Materials List.")

MATERIAL REQUIREMENTS

These materials are required in one-hour plywood assemblies. Refer to Underwriter's Laboratories "Building Materials Lists" if additional information is required.

a. **Subflooring** – Minimum ½" DFPA CD with Exterior glue plywood.
b. **Subfloor-Underlayment** – 1⅛" tongue-and-groove DFPA 2•4•1 with Exterior glue plywood.
c. **Underlayment** – ⅝" tongue-and-groove DFPA Underlayment grade plywood.
d. **Stressed Skin Construction** – ⅝" DFPA CD with Exterior glue plywood glued to minimum 1200 psi 2 x 6's at 12" o.c. Fabricate in accordance with American Plywood Association Fabrication Specification SS-8.

HEAVY TIMBER ROOF CONSTRUCTION

Most building codes include a type or classification of construction referred to as "Heavy Timber." In this type of construction, fire resistance is attained with extra thick materials (codes specify minimum thicknesses), construction details, avoidance of concealed spaces, and other factors. Heavy Timber type construction is widely recognized as comparable to one-hour constructions.

Full scale fire tests have shown that 1⅛" 2·4·1 plywood provides the same good performance as nominal 2" tongue-and-groove lumber decking. See Figure 7. For this reason 1⅛" plywood is rapidly gaining acceptance for Heavy Timber roof construction. The Uniform Building Code recognition of tongue-and-groove 2·4·1 in this application is one example. (Research Recommendation No. 1007.9.)

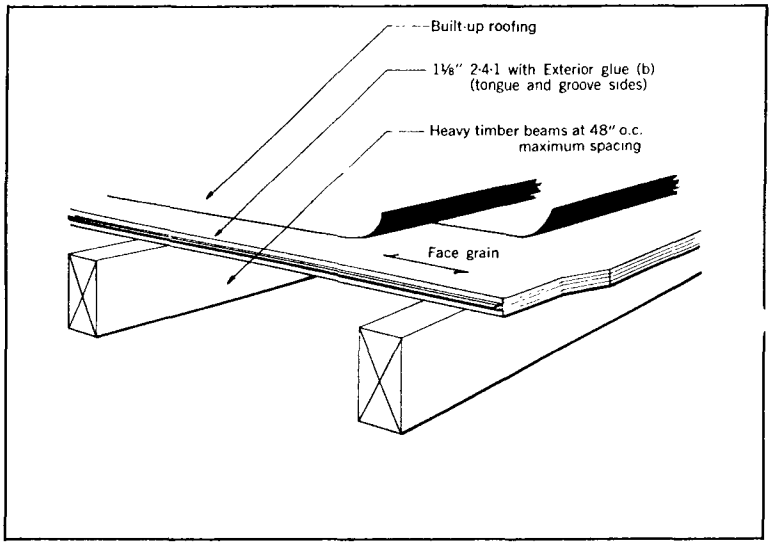

Figure 7. Plywood heavy timber roof construction.

For More Information

Write American Plywood Association, 1119 A Street, Tacoma, Washington 98401 for Plywood Constructions Systems, Form No. 65-310. This 48-page guide shows how plywood is used for roofs, walls, and floors in commercial and industrial buildings. It is a new publication first released in December, 1965.

AMERICAN PLYWOOD ASSOCIATION

TESTED DFPA QUALITY

SGP 0025271