A

AUDIT FORM
ABERDEEN PVC PLANT

DATE: April 5, 1991

SYSTEM BEING AUDITED: Batch Water Strippers

AUDIT NO.: _____

AUDITORS: Lee Childers, Steve Wilkes, Debbie Johnson

1. Go talk to safety to see what ideas they have about the system and what things you should look for in your audit.

2. Find existing documentation about the system:

		Found (attach)	Not Found	Not Applicable
A.	Process Flow Diagram	X (file 2.53.0)		
B.	P & I Diagrams	X (and PCD)	# PT-385-42-1-D (MS-9650-42-1-D)	
C.	Class "A" Design	X (file 2.53.0)		
D.	Operating Procedures	X		
E.	Maintenance Procedures		X	
F.	Mechanical Design & Construction Files	X (drafting room)		
G.	Plant Location Lists			X
H.	Plot Plans	X (file 2.53.0)		
I.	EPA Rules	X		
J.	OSHA Rules		X	
K.	Vista Standards	X (part of procedures)		
L.	Previous Audits		X	

3. **Interview three people separately who are familiar with the system you're auditing. Learn from them how the system works and their concerns about the system.**

Interviewed Darnell Perry (O.M. Lead Operator), Rodger Collins (Vinyl Shift Supervisor), and Lee Childers (O.M. Lead Operator)

There was general concensus that the system was operated in a safe manner, but there were a few concerns that dealt mainly with performance. These are listed in the Brainstorm section (#6).

4. **Is it operated as the operating procedures (design, etc.) say it is supposed to be operated? If no, what's different?**

No. Changes in operation are indicated on the attached operating procedures.

5. **Is it used per the appropriate OSHA, EPA, or Vista Standards? Yes/No**

YES

6. **Brainstorm possible problems with the system. Attach the brainstorm list.**

1. Insulate all hot lines for personnel protection
2. Leaky valves (steam and VCM-containing lines)
3. Wasting steam by feeding it to the stripper in two places during dump
4. Cannot dump in "DUMP" mode (which is automatic)--have to dump in manual mode because pressure setpoint is not adjusted correctly. This is especially a problem on the south stripper. If the BWS is allowed to empty completely and VCM is fed to the hot stripper, the VCM may flash in the tank. In the "DUMP" mode, the stripper level is interlocked with the dump valve so that the dump valve closes at 10-12% liquid level, so to prevent flashing.

7. **Do any of the problems identified in your brainstorming list make it unsafe?**

Yes. Uninsulated lines can cause burns. VCM can flash in a hot, empty stripper.

8. **What needs to be done as follow-up to this audit? What changes need to be made?**

1. Make sure that hot lines are insulated, particularly the sample lines - w.o. written.
2. Evaluate the following items to see if changes should be made:
   a. replacing leaky valves, especially steam valves, during shutdown;
   b. increasing hold time to 1 hour from 30 minutes;
   c. installing auto block valves on both sides of the 3-way inlet valve, to prevent VCM from going into a stripper while the other stripper is filling.
3. Make necessary system changes so that strippers can be dumped in automatic (i.e. "DUMP" mode) instead of manual. The dump valve on the stripper is interlocked with the BWS pressure. The pressure setpoint is so low that the dump valve will close during the dump. In addition, if the operator forgets to stop the dump at 10% (of liquid level in the stripper), the BWS will empty completely. When he begins to fill the hot, empty stripper VCM may flash in the tank.

9. **When should this be audited again? Why?**

In one year (after VCSM has been running for a while), to see if the safety items have been done.

EPA REGULATION

PROPOSED 12/24/75

PROMULGATED 10/20/76

PLANT OPERATED UNDER A WAIVER OF COMPLIANCE UNTIL SYSTEMS COULD BE INSTALLED TO MEET THE STANDARD 9/1/78.

- STRIP SLURRY TO < 400 PPM VCM
- REACTOR OPENING LOSS < 20 PPM VCM
- NO MANUAL VENTING OF VCM
- NO RELIEF VALVE DISCHARGES OF VCM
- MINIMIZE FUGITIVE VCM EMISSIONS
  - o RAILCAR UNLOADING LINES
  - o DOUBLE MECHANICAL SEAL ON ROTATING PUMPS AND COMPRESSORS AND AGITATORS
  - o REDUCE VCM IN EQUIPMENT BEFORE OPENING TO ATMOSPHERE
  - o SAMPLES
  - o REQUIRED LEAK DETECTION AND ELIMINATION PLAN
    - CONTINUOUS MONITORS
    - PORTABLE MONITORS
  - o IN-PROCESS WASTEWATER STRIPPED TO LESS THAN ~~10 PPM~~ 200 PPB VCM
  - o EXHAUST GASES REDUCED TO < 10 PPM VCM
- EMISSION TESTS
- EMISSION MONITORING OF INCINERATOR OFFGAS
- REPORTING
- RECORDKEEPING

OPERATING MANUAL

BATCH WATER STRIPPERS

ABERDEEN CHEMICAL PLANT

JUNE 19, 1981

Work By: D. C. Wing /VEM
D. Chris Wing
Process Engineer

Reviewed By: Veldon E. Messick
Veldon E. Messick
Senior Process Engineer

Approved By: R.A. Frohreich
R. A. Frohreich
Chief Process Engineer

OPERATING MANUAL
BATCH WATER STRIPPERS
ABERDEEN CHEMICAL PLANT

TABLE OF CONTENTS

I. INTRODUCTION

II. PROCESS DESCRIPTION

III. OPERATING PROCEDURES

IV. INTERLOCKS AND ALARMS

V. EQUIPMENT INDEX

VI. INSTRUMENT INDEX

VII. DRAWINGS

- A. INSTRUMENT LAYOUT
- B. ANNUNCIATOR LAYOUT
- C. PUSH BUTTON LAYOUT
- D. P & I DIAGRAMS
  1. BATCH WATER STRIPPING - OLD MODULE
  2. BATCH WATER STRIPPING - NEW MODULE

VAB.0001128883

A

OPERATING MANUAL
BATCH WATER STRIPPERS
ABERDEEN CHEMICAL PLANT

I. INTRODUCTION

The purpose of this system is to safely and practically treat the plant's process wastewater prior to draining it to the sewer. The EPA standard requires that before any wastewater stream containing vinyl chloride monomer (VCM) be released to the atmosphere it must contain less than 10 ppm of VCM. Several wastewater streams throughout the plant are contaminated with VCM and require treatment. This system receives all VCM contaminated wastewater streams and reduces the VCM concentration by steam stripping. The wastewater is then dumped to the sewer and flows to the bio ponds.

200ppb

backflush filters

cooling towers (2,3,4)

pumped through one of two new tripper pumps

II. PROCESS DESCRIPTION

This system serves as a central collection point for all of the contaminated wastewater streams, which include water drains from the V-11 receivers, water from the emission recovery system, water from the CRD area, and water from the contaminated drains. The streams from the V-11 area are routed directly to one of two parallel stripping tanks, 45-801 or 45-802. The wastewater from the CRD area is collected in the existing blowdown drum, 45-746, and pumped to 45-801 or 45-802 to be stripped.

Each new tank is used as both a collector and a stripper. While one tank serves as a collection vessel, the other is being stripped with steam. These vessels will alternate duties to provide continuous wastewater collecting.

The batch water strippers are controlled by a process computer (the Modicon) which provides interlocks and valve sequencing.

There are three modes of operation, (1) Fill (2) strip and (3) dump.

When one tank is in the fill mode the other tank is either in the strip or dump mode. When one tank, say 45-801, is ready to be stripped, the panel operator routes the process water to the other stripping tank, 45-802, by placing that tank in the fill mode. This is done from the control room by pressing the "mode adv" button until the "fill" light for 45-802 is on and pressing the "open button" for the inlet control valves for 45-802, CV-952 and CV-962. These inlet valves on 45-802 are interlocked with the inlet valves to 45-801 so that when CV-952 and CV-962 open, CV-951 and CV-961 close. 45-801 is now ready for stripping. The panel operator presses the "mode adv" button until 45-801 is in the "strip" mode. The 45-801 recovery valves, CV-953 and CV-965 and the stripping steam inlet valve, CV-959, automatically open while the VCM bleed valve, CV-955, automatically closes. Steam is then injected into 45-801 at 5,500 pounds per hour.

Vapors from 45-801 are routed to the emission recovery system. The pressure in 45-801 and the suction of the emission recovery compressors soon equalize at 9 psia which corresponds to a stripping temperature of 190°F. When the temperature of 45-801 reaches 190°F, a timer attached to the temperature controller TR-951 is activated. Thirty minutes later, the timer will activate an alarm on the board, close vapor recovery valves, CV-953 and 965, and open CV-963, the pressurizing steam valve. Once the pressure of 45-801 reaches 6 psig, the operator will place 45-801 into the "dump" mode and open the water outlet valve, CV-957.

215°F

II. PROCESS DESCRIPTION (Cont.)

CV-957 will close when the liquid level in 45-801 drops below LSL-951, the low level switch. This switch will also close the stripping and pressurizing steam valves, CV-959 and CV-963, and open the pressure bleed and vapor outlet valves, CV-955 and CV-965. Tank 45-801 will then automatically advance into the "fill" mode. This completes one cycle and 45-801 is now prepared to collect blowdown water.

During the collecting process, the stripping tank pressure is maintained at 2 psig. PIC-953 vents vapors from the stripping tank to the emission recovery system if the tank pressure exceeds 2 psig.

In the new module the existing blowdown tank, 45-746 is used to store collected liquids. The water is recirculated through 45-746 by the transfer pump, 72-974, or its spare 72-979. When the liquid level in 45-746 reaches the high level switch, LSH-740, CV-968 on the recirculation line will close and CV-967 on the transfer line to the batch water strippers will open. At a low liquid level, CV-967 will close and CV-968 will open allowing recirculation. The controls for the transfer pumps are located in the new module recovery section in the vinyl control room.

III. OPERATING PROCEDURES

Automatic Operation

A. Determine if the batch water tank being filled is ready to be stripped. A tank is ready to be stripped if the level in the tank is 6½-feet or higher, (70% of scale on the panel mounted level indicators). The level of the tank may be determined by checking the level indicators on the main control panel or looking at the liquid level sight glass mounted on each tank. A high level alarm (LAH-953 for 45-801 or LAH-954 for 45-802) sounds at a liquid level of 7-feet, 2-inches (80% of scale on panel mounted level indicators).

50%

B. If the tank being filled is ready to be stripped, the other batch water tank must be ready to receive the water from the collecting headers. The tank is ready to receive the water if it is in the "fill" mode (noted by the "fill" light being lighted). If the tank is in the "fill" mode, the vapor outlet and pressure bleed valves (CV-965 and CV-955 for 45-801 or CV-966 and CV-956 for 45-802) will be open.

C. Place the tank that is ready to be filled into the fill position by opening either CV-951 and CV-961 for 45-801 or CV-952 and CV-962 for 45-802. This will automatically close the corresponding set of valves on the ready to be stripped tank and line up the three-way valves, CV-969, such that VCM from the double block and bleed on the VCM charge headers is draining to the tank being filled.

NOTE: When both tanks are in the fill mode, the inlet valves to both strippers can be closed. The operator must be sure that this never happens by opening the valves on the tank to be filled instead of closing valves on the tank to be stripped.

D. Place the ready to be stripped tank into the "strip" mode by pressing the mode advance button for that tank until the "strip" light is on. This will automatically:

1. Close the pressure bleed valve (either CV-955 for 45-801 or CV-956 for 45-802).

2. Open the vapor outlet valves (CV-953 and CV-965 for 45-801 or CV-954 and CV-966 for 45-802).

3. Open the stripping steam valve (either CV-959 for 45-801 or CV-960 for 45-802).

III. OPERATING PROCEDURES (Cont.)

Automatic Operation

After the temperature of the tank reaches or exceeds 190°F 215°F a timer in the Modicon starts. When 30 minutes have elapsed:

1. The ready to dump alarm, TAH-951/952, is activated.

2. The recovery valves are closed.

3. The pressurizing steam valve (CV-963 for 45-801 or CV-964 for 45-802) is opened.

E. When the tank pressure reaches 6 psig, as read on panel pressure indicators, PI-951 or PI-952, the mode advance button should be pressed to advance into the "dump" mode and the water outlet valve (CV-957 for 45-801 or CV-958 for 45-802) should be opened.

The level in the tank drops until the level reaches the set point for the low level switch (LSL-951 for 45-801 or LSL-952 for 45-802). This is approximate 12% on the level indicator.

The low level switch on the tank does the following at low level.

1. Closes the water outlet valve.

2. Closes the stripping steam valve.

3. Closes the pressurizing steam valve.

4. Opens the pressure bleed valve.

5. Opens the vapor outlet valve.

6. Advances the tank into the "fill" mode.

This completes a cycle for the batch water strippers. The operator will then wait until the other tank is ready to be stripped and start the sequence again.

Manual Operation

In automatic operation one of the indicators (fill, strip, dump) will be lighted. In manual operation the mode indicators will be off and the manual push button/light will be illuminated. Switching from automatic to manual mode will cause all valves to go to their fail-safe positions and all interlocks and Modicon control will be bypassed. The transfer of water from 45-746 in the new reactor module to the batch water strippers is unaffected by a mode switch since there is a separate local manual take-over swtich for the new module.

III. OPERATING PROCEDURES (Cont.)

Manual Operation

To operate in the manual mode, press the "man" button. All of the mode indicator lights will go out and the "man" will go on. The operator can then manually operate the valves from the control board. Follow the sequence as described in the automatic operation section, the major difference being that the panel operator must open and close each valve. When in the manual mode, the three-way valve, CV-969, will automatically line up to drain to the south tank, 45-801. To fill the north tank this valve must be lined up with 45-802 by operating the switch on the board.

Power Failure

The Modicon is protected by back-up power so operation of the batch water stripper valves should be unaffected by power failure. Upon loss of air pressure to the control valves, all will fail in the "as is" position.

OPERATING MANUAL
BATCH WATER STRIPPERS
ABERDEEN CHEMICAL PLANT

IV. INTERLOCKS AND ALARMS

The following interlocks are provided for on-off control valves to prevent discharging VCM contaminated water to the sewer. The interlocks are maintained by a process computer, the Modicon 584. The interlocks are bypassed when the mode selection is off. Items in parenthesis correspond with 45-802 operations.

1. 45-801 (45-802) water inlet valves CV-951 and CV-961 (CV-952 and CV-962) can be opened only in the "fill" mode. Both tanks may be in the "fill" mode simultaneously but only one set of inlet valves may be open as stated in item 2.
2. Opening the 45-801 (45-802) water inlet valves CV-951 and CV-961 (CV-952 and CV-962), automatically closes the 45-802 (45-801) water inlet valves, CV-952 and CV-962 (CV-951 and CV-961).
3. In the "dump" mode 45-801 (45-802), the water inlet valves, CV-951 and CV-961 (CV-952 and CV-962); the vapor outlet valves, CV-953 (CV-954) and CV-965 (CV-966); and the pressure bleed valve, CV-955 (CV-956) are all closed automatically and locked out of manual operation.
4. In the "strip" mode, advancement of mode cannot be made until the 30 minute timer in the Modicon has timed out. See Operating Procedures, item D.

Alarms

Below are listed alarms and possible conditions that could cause these alarms.

LAH-953/954 - High water level in batch water tank (7 feet, 2 inches) 45-801/802

1. Indicates that batch water tank is full and ready to be placed in "strip " mode.

LAL-955/956 - Low water level in batch water tank (1½ feet) 45-801/802

1. Indicates that batch water tank has low level.

LAH-957 - High water level in new module collection tank, 45-746

1. Indicates that 45-746 is full. Possible malfunction in level switch of control valves.

IV. INTERLOCKS AND ALARMS (Cont.)

Alarms (cont.)

PAH-951/952 - High Pressure in batch water tanks (40 psig)

1. Bleed - back pressure controller (PIC-953) could be malfunctioning.
2. Steam blowdown pressure regulator failure (PIC-954).
3. Vapor outlet valves (CV-965/953 or CV-966/954) closed during "stripping".
4. Pressure bleed valves (CV-965/955 or CV-966/956) closed during "fill".

PAL-951/952 - Low pressure (below 2 psig) in batch water tanks.

1. Water outlet valve (CV-957 or CV-958) open when tank is empty of liquid.

AA-951/952 - Control valves operated out of sequence.

1. Modicon problems
2. Bad solenoid on a control valve.

OPERATING MANUAL
BATCH WATER STRIPPERS
ABERDEEN CHEMICAL PLANT

V. EQUIPMENT INDEX

A. Tanks

1. Blowdown drum - 45-801 - 45-802

a. Purpose

Vessel to collect and recover various VCM containing vapor vents and waste waters.

b. Description

Horizontal - mounted, 26 foot 0 inch straight wall, 10 foot 0 inch I.D., carbon steel construction.

c. Normal Operating Conditions

Ambient temperature to 190°F and pressures from 10 inches Hg vacuum to 10 psig.

d. Design Conditions

350°F and full vacuum to 150 psig.

B. Filters

1. Suction Strainers FD-951, FD-951S

a. Purpose

Strainer to remove PVC particles from the 45-746 liquid outlet to the transfer pump.

b. Description

Four inch Andale type 105 simplex strainer with 3/8 inch perforated stainless steel basket and carbon steel body.

c. Normal Operating Conditions

0 psig and 130°F at 75 GPM.

d. Design Conditions

150 psig

V. EQUIPMENT INDEX (Cont.)

B. Filters (cont.)

2. Flush Water Filters

a. Purpose

To remove dirt and scale from the seal flush filters.

b. Description

Filterite high pressure filter, 3/4 inch, model LM010S-3/4 HP, cartridge type, particle size retention ten microns with a polypropylene filter element with a stainless steel core.

c. Normal Operating Conditions

220 psig at 100°F

d. Design Conditions

500 psig and ambient temp.

C. Pumps

1. Transfer Pump 72-974, 72-979

a. Purpose

To tranfer blowdown water from FA-728 to the batch water strippers.

b. Description

Centrifugal type, Gould's model 3196, 1 x 1.50-8, 10 HP, 3500 RPM, impeller is 6.25 inches and constructed of 316 SS.

c. Normal Operating Conditions

Rated for 75 GPM at 173 feet of differential head.

VI. INSTRUMENT INDEX

Flow Instruments

Tag No.	Service	Type	Setpoint
FIC-951	Stripping steam	Foxboro Spec-200 Indicating controller	
FI-956	Seal Flush	Brooks 3604C Rctameters (Local)	Normal 0.25 GPM
FI-957	Seal Flush	Brook 3604C Rotameters (Local)	Normal 0.25 GPM

Pressure Instruments

Tag No.	Service	Type	Setpoint
PI-951	45-801	Foxboro Spec 200 Pressure Indicator	
PI-952	45-802	Foxboro Spec 200 Pressure Indicator	
PIC-953	45-801/802 Vapor Exit	Foxboro 43AP-FA47C (Local)	2 psig
PIC-954	45-801/802 Steam	Foxboro Spec 200 Steam Control	

Level Instruments

LI-951	45-801 Level	Foxboro Spec 200/dp Cell	
LI-952	45-802 Level	Foxboro Spec 200/dp cell	

VI. INSTRUMENT INDEX (Cont.)

Temperature Instruments

Tag No.	Service	Type	Setpoint
TR-951	45-801 Temperature	Foxboro Spec 200 Temperature	190°F[1]
TR-952	45-802 Temperature	Foxboro Spec 200 Temperature Indicator With Alarm	190°F[1]

[1] TR-951 and TR-952 to be connected to a timer and a switch to control (on/off) stripper outlet control valve CV-953 (or CV-954).

OPERATING MANUAL
BATCH WATER STRIPPERS
ABERDEEN CHEMICAL PLANT

VII. DRAWINGS

A. INSTRUMENT LAYOUT

B. ANNUNCIATOR LAYOUT

C. PUSHBUTTON LAYOUT

D. P & I DIAGRAMS
   1. Batch Water Stripping Old Module
   2. Batch Water Stripping New Module

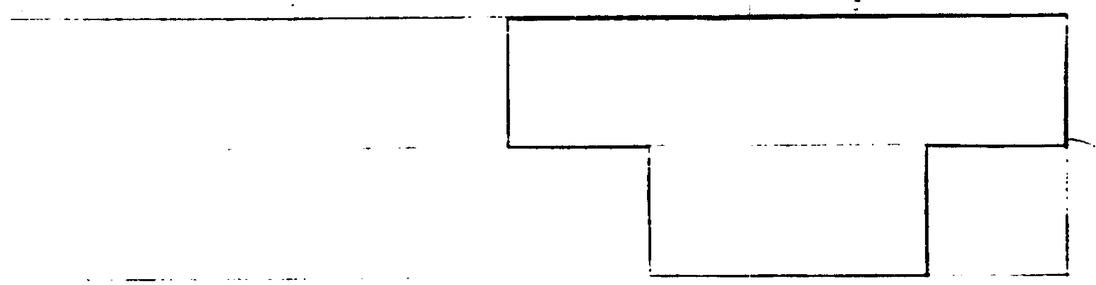

	7	8	9	
LA-957 [illegible] UNIT [illegible] TANK [illegible] LEVEL	AA-951 SO. WTR STRPPR. VALVES OUT OF ORDER	LAH-953 SOUTH WATER STRIPPER HIGH LEVEL	LAL-955 SOUTH WATER STRIPPER LOW LEVEL	A
	AA-952 NO WTR. STRPPR VALVES OUT OF ORDER	LAH-954 NORTH WATER STRIPPER HIGH LEVEL	LAH-956 NORTH WATER STRIPPER LOW LEVEL	1
	PAH-951 SOUTH WATER STRIPPER HIGH PRESSURE	PAL-951/952 WTR STRIPPER LOW PRESSURE DUMP		2
	PAH-952 NORTH WATER STRIPPER HIGH PRESSURE	PAH-951/952 WTR. STRIPPER READY TO DUMP	TEST ACK	3

NOTE
1. LOCATED ON MAIN CONTROL PANEL OLD MODULE RECOVERY SECTION

AFE

ISU	DATE	DESCRIPTION	BY	CKD	APD
	5/1/81	[illegible]	[illegible]		[illegible]

CONOCO CHEMICALS
ABERDEEN MISSISSIPPI

ANNUNCIATOR LAYOUT
OPERATING MANUAL
BATCH WATER STRIPPERS

SCALE:

APPD:
DATE: [illegible]

No.

VAB.0001128897

INSTRUMENT LAYOUT

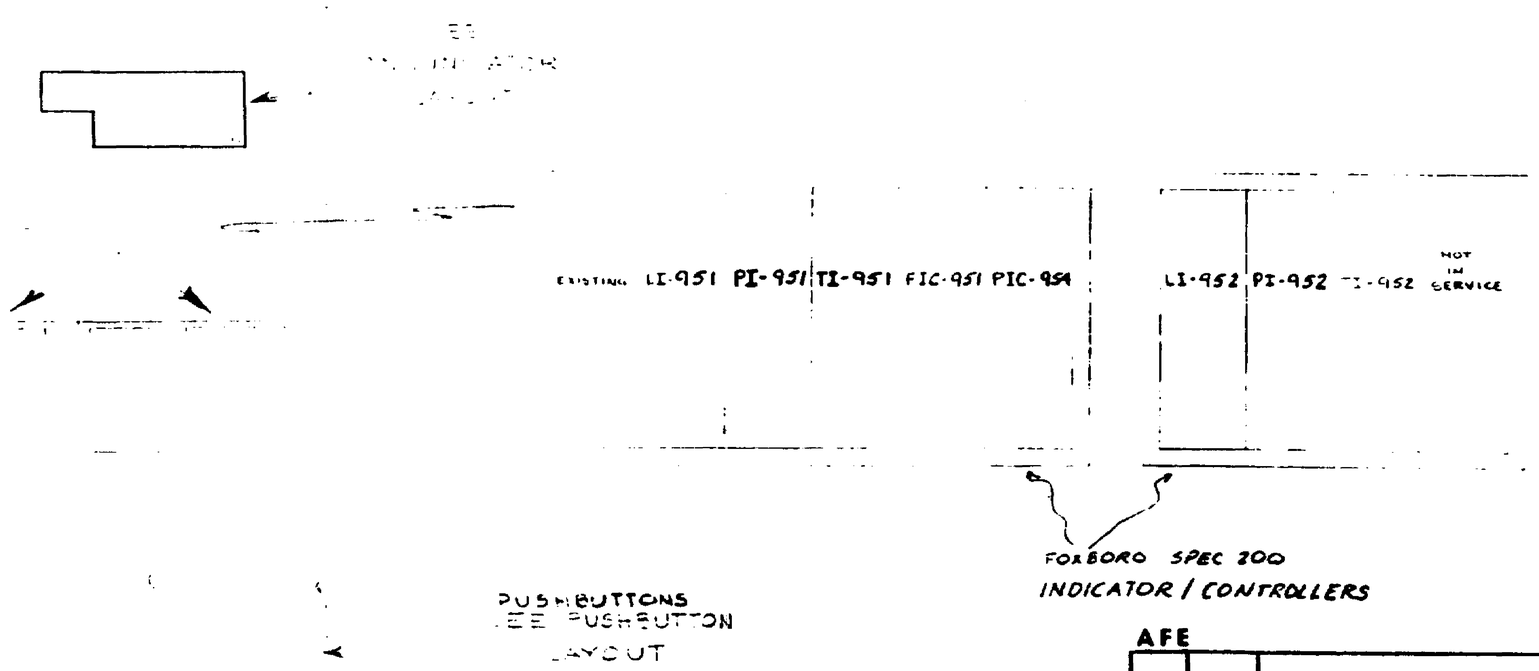

AFE

ISU	DATE	DESCRIPTION	BY	CKD	APD
	5/5/81	ORIGINAL	DEW		

CONOCO CHEMICALS

ABERDEEN MISSISSIPPI

INSTRUMENT LAYOUT
OPERATING MANUAL
BATCH WATER STRIPPERS

SCALE:

APPD: W. E. Nixon
DATE:

No.

VAB.0001128898

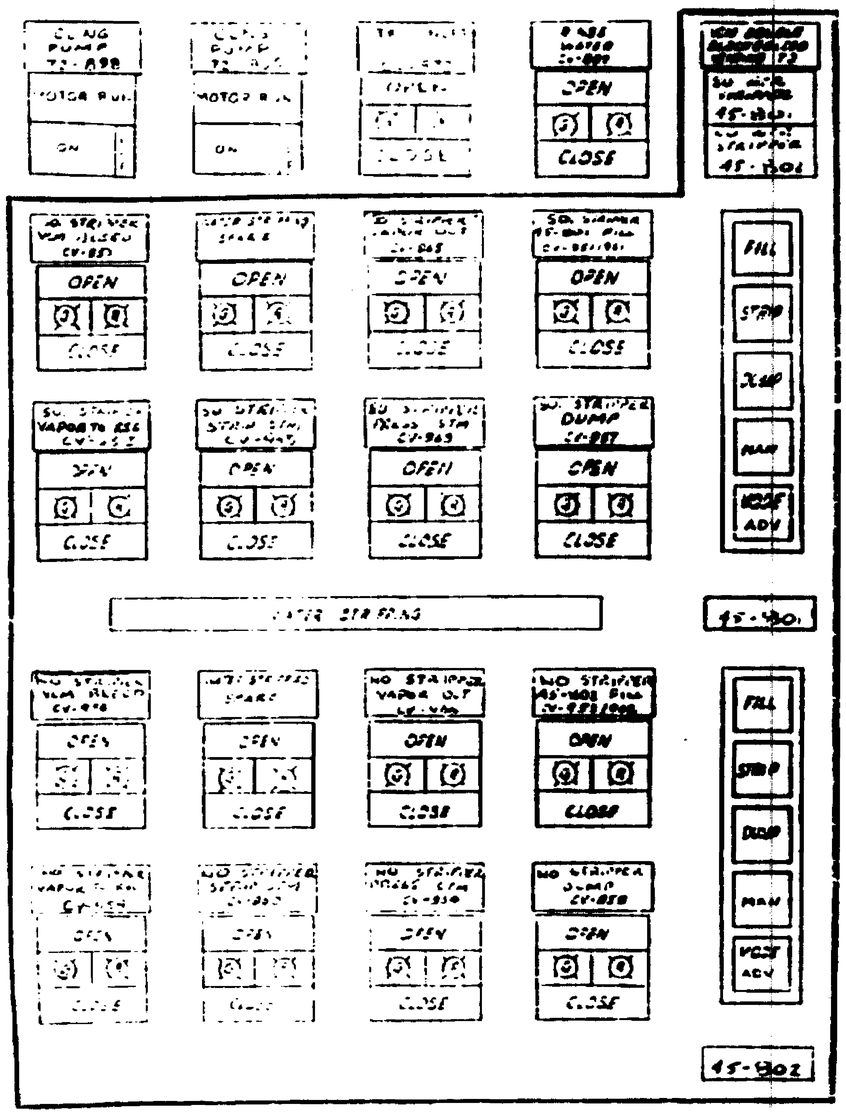

LOCATED IN
CLOUDED AREA
ON INSTRUMENT
LAYOUT DRAWING

OLD MODULE RECOVERY SECTION

AFE

ISU	DATE	DESCRIPTION	BY	CKD	APD
	5/6/81	OLD MODULE RECOVERY SECTION			

CONOCO CHEMICALS

ABERDEEN MISSISSIPPI

PUSH BUTTON LAYOUT
OPERATING MANUAL
BATCH WATER STIPPERS

SCALE:

APPD:
DATE:

No.

VAB.0001128899

III. Batch Water Stripper Temperature/Pressure Recorder

A. Purpose

The function of the batch water strippers is to remove VCM residuals from process wastewater before the water is released to the wastewater treatment ponds. This is completed by injecting steam through spargers located in the strippers, while pulling a vacuum on the tanks with the emission recovery system. A thirty minute timer is activated when the water in the stripper reaches the set temperature of 215°F. This temperature has to be maintained during the 30 minute hold period or the batch will not be able to be dumped. An alarm sounds when the batch has been held for thirty minutes above the set temperature. During this thirty minute interval pressure observations are critical. If vacuum is lost on the strippers during this time, the performance of the strippers is detrimentally affected. A batch stripped when this occurs may or may not be below the level of 10 ppm required by EPA regulation. With the installation of the temperature/pressure recorder, the operator will now know what the pressure and temperature did during the stripping time. If something unusual happens and vacuum is lost on the stripper, the operator can restrip the batch and prevent a violation of EPA regulations.

The normal temperature and pressure operating ranges are listed below:

Mode	Temperature	Pressure
Fill	100-150°F	Slight Vacuum (0-5in Hg)
Strip	215°F Set Temp.	Vacuum During Entire 30 min. Hold Period (0-10in Hg)
Dump	215°F	Slight Pressure (0-5psi)

A

BATCH WATER STRIPPERS

STRIPPING REPORT

Batch No.:_____

Date:_____ Time:_____

North or South Stripper:_____

Shift:_____ Operator:_____

Comments:_____

_____

_____

_____

_____

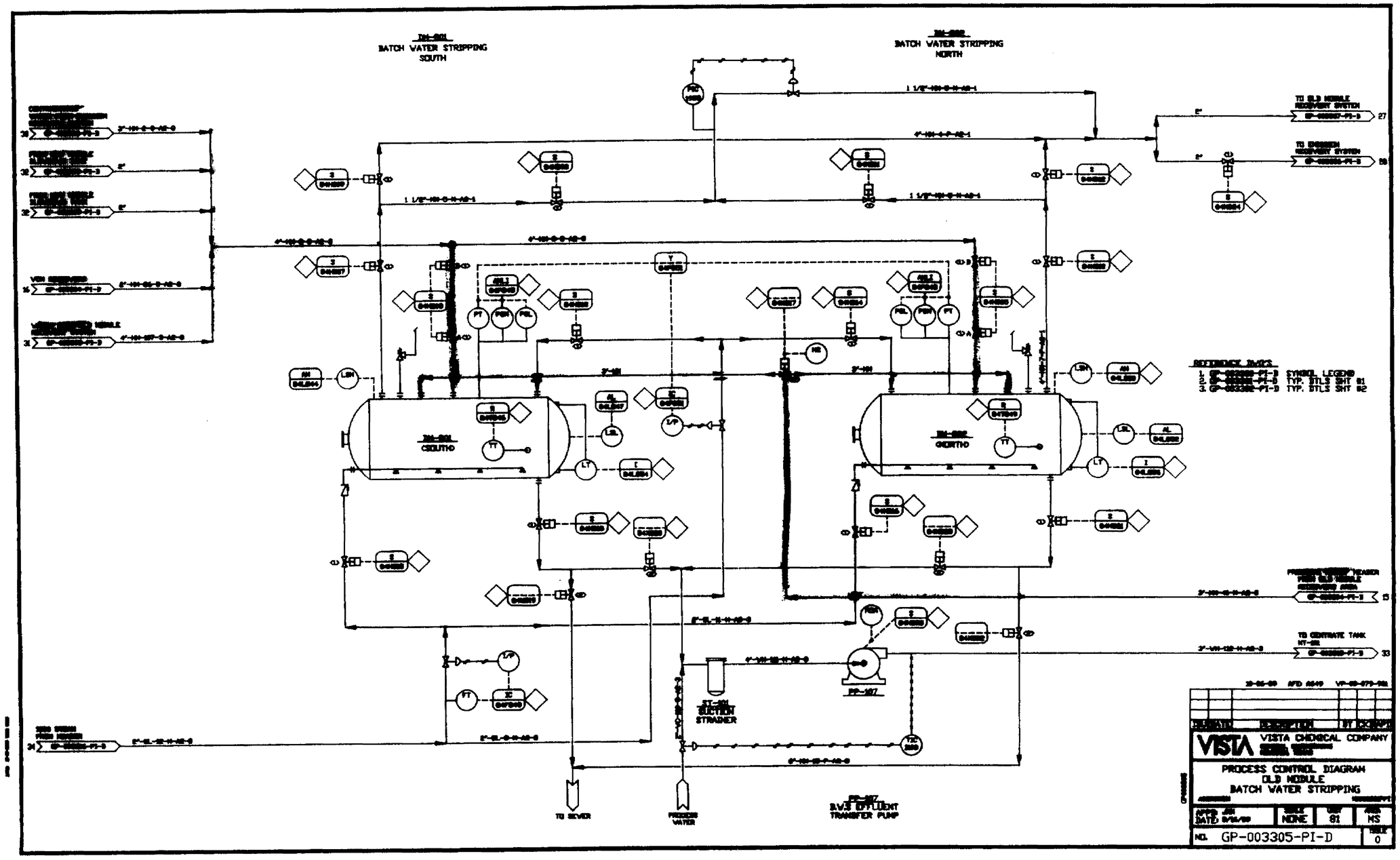

VAB.0001128902

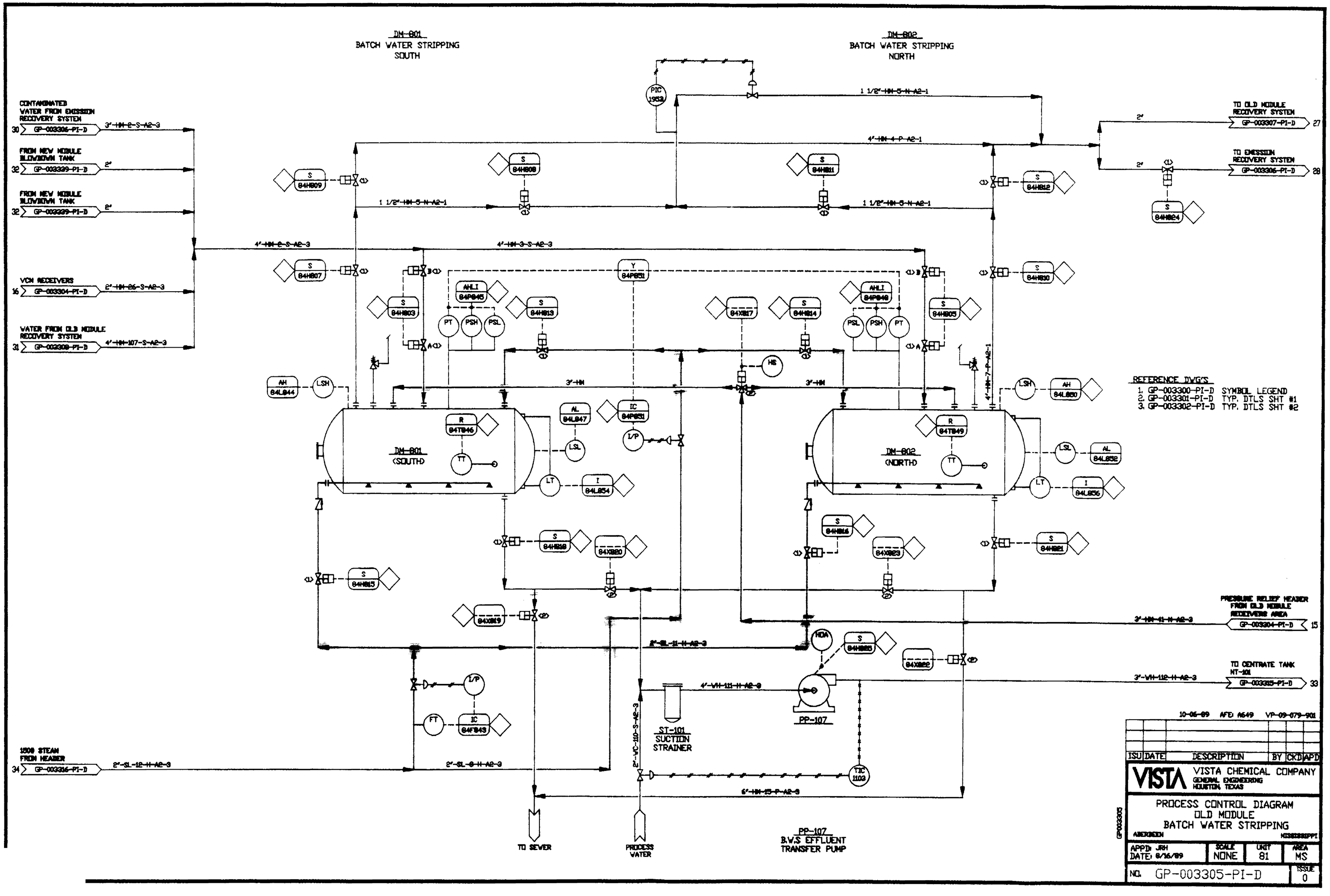

VAB:0001128903