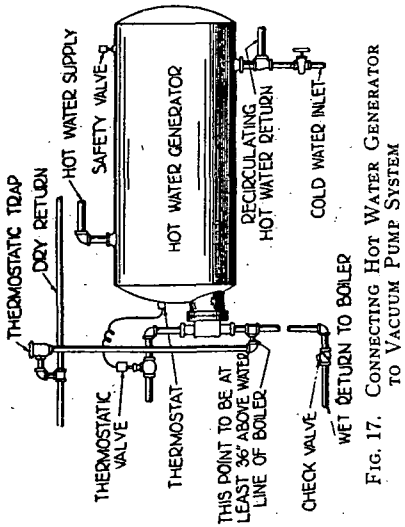

FIG. 17. CONNECTING HOT WATER GENERATOR TO VACUUM PUMP SYSTEM

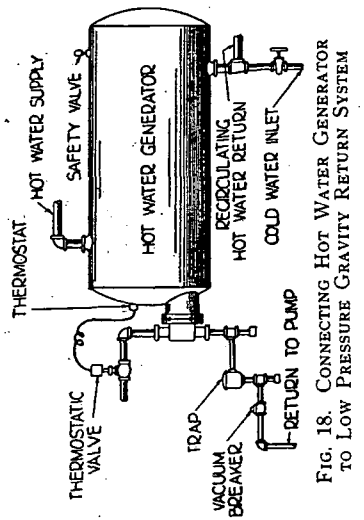

FIG. 18. CONNECTING HOT WATER GENERATOR TO LOW PRESSURE GRAVITY RETURN SYSTEM

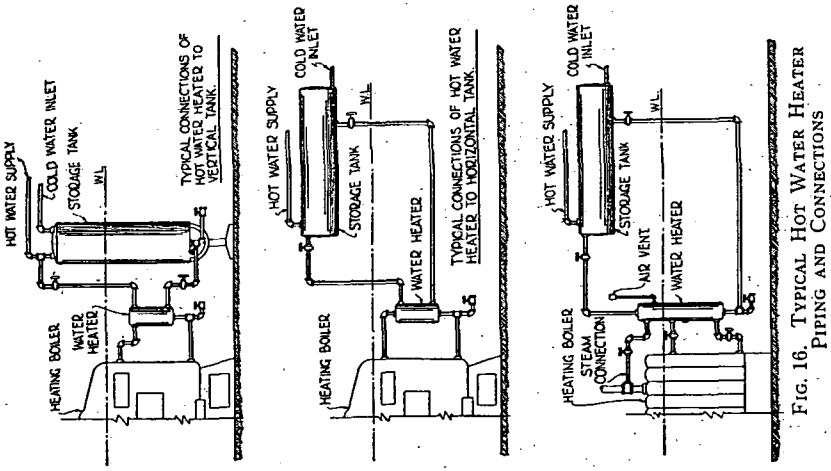

FIG. 16. TYPICAL HOT WATER HEATER PIPING AND CONNECTIONS

CHAPTER IV

HOT WATER HEATING SYSTEMS AND PIPING

Heat Emission of Hot Water Radiators, Temperature Drop, Different kinds of systems, Determination of Pipe Sizes, Simple Rules for Small Systems, Details of Connection.

THE feature which distinguishes hot-water heating systems from all other types is that water serves as the medium by which heat is conveyed from the heater to the radiators. Water has a large capacity for heat and for that reason it is well suited to perform the service of conveying heat.

The design of a hot-water heating system should include the radiators, the heater or heaters, and the piping system. These three subjects will be considered in the order named.

RADIATION

To proportion the radiation it is necessary to know the quantity of heat, *i.e.*, the number of B.t.u. which are lost in a unit of time by the room or space in which the radiator is to be located and which must be replaced by the heat dissipated by the radiator so that the room or space may remain at the desired temperature.

The methods of determining the heat losses from a building or part of a building are explained in Chapter I.

Knowing the number of B.t.u. which a particular radiator is to dissipate (see Chapter II), it is necessary to assume the temperatures at which the water is to enter and to leave the radiator. Having done this, it is customary to assume that the mean of these two temperatures is the average temperature of the water in the radiator. For example, if the water is to enter the radiator at a temperature of 200 deg. and to leave it at a temperature of 180 deg., it is assumed that the average temperature of the water in the radiator is 190 deg. If, in this case, the average room temperature is to be 70 deg., the average difference of the temperature of the water in the radiator and of the air surrounding the radiator is 120 deg. This temperature difference, water to air, is used as the basis for the design of the radiator.

The transfer of heat from the radiator to the surrounding space takes place partly by radiation, partly by convection, and partly by conduction. The quantity of heat dissipated by a radiator per square foot of surface, per hour, and per degree of temperature difference, water to air, is the heat dissipation coefficient of the radiator. This coefficient is generally represented by the letter k. A little reflection will convince the reader that the value of k, for a given type radiator, must decrease as the length

This Chapter especially prepared for THE GUIDE by Prof. F. E. Giesecke, Director of Texas Engineering Experiment Station, College Station, Texas.