Monsanto COMPANY

LOCATION THRU 14FT LEVEL

TANK OR PRESSURE VESSEL PERFORMANCE DATA

PROD/DEPT 811.00

EQUIP. IDENT NO. 1-418
AUTH NO. 1800 PLANT W6K
BY RS YATES DATE 10-18-67
APPD SHEET 1 OF 1

NAME CHLORINATOR No. 9 NO. REQD 1

FUNCTION TO RECEIVE AROCLOR 1235 AND FERRIC CHLORIDE FOR CHLORINATION

OPERATION CONTINUOUS FEED OF MATERIALS. LEVEL CONTROLLED OVERFLOW TO ITEM 1-422

MATERIALS

PROCESS

MATERIAL	UNITS	INPUT	OUTPUT
AROCLOR 1235	LBS/HR	5471	
FERRIC CHLORIDE	LBS/HR	2	2
CHLORINE	LBS/HR	1140	10
AIR	LBS/HR	154	154
HYDROGEN	LBS/HR	1	1
HYDROGEN CHLORIDE GAS	LBS/HR		538
AROCLOR 1242	LBS/HR		5471

UTIL

PERFORMANCE INFORMATION

		UNITS	NORMAL OPERATION	DESIGN BASIS
CAPACITY	WORKING VOLUME	GAL	846	
	FREEBOARD	GAL	846	
	TOTAL VOLUME	GAL	1729	
☒ RETENTION OR ☐ CYCLE TIME		HRS	1.7	
INTERNAL PRESSURE		PSIG	5-10	50
INTERNAL TEMPERATURE		°F.	302 - 392	
DENSITY		LBS/GAL	10.7	
AREA OF ☐ JACKET OR ☐ COIL				
HEATING OR COOLING FLUID	FLOW RATE			
	PRESSURE			
	TEMPERATURE		IN OUT	IN OUT

DESIGN CRITERIA
(1) VAPOR VELOCITY SAME AS VELOCITY IN ANN. CONT. UNIT
(2) LIQUID LEVEL OVER SPARGER EQUAL TO OR GREATER THAN ANN. CONT. UNIT

EQUIPMENT INFORMATION

TYPE ASME DISHED TOP AND BOTTOM ☒ VERT ☐ HOR DIMENSIONS 4'0" OD 20'0" HIGH/LONG
MATERIALS CARBON STEEL CLASS II, SPEC D2.1 STD 3 AND D2.2 STD 3 CORR ALLOW. 1/8 INCH OF CONSTRUCTION
☐ INTERNAL COIL ☐ EXTERNAL COIL ☐ JACKET
NONE REQD
AGITATOR
NONE REQD
INSTRUMENT CONNECTIONS 9-3" IPS NOZZLES FOR TEMP CONTROL AND INDICATION
INSULATION 1" THICK SPEC K11.2 STD 140 AND K11.3 STD 10 FOR BFT S.S.
VENTS, PRESSURE RELIEF 2-3" IPS NOZZLES FOR VENT AND RUPTURE DISC
OTHER
TRACE 12 FT OF S.S. FOR STEAM HEAT
SPARGER ACCORDING TO DWG T5-A-8282 MODIFIED.

NOZZLE SCHEDULE
☐ PER TANK STD ☒ AS BELOW

MK	SIZE NPS	PIPE SCH	FLG TYPE	FLG RATING	NOZZLE FUNCTION
L SIDE	4	40	B	150	INLET 3' FR BBL
A SIDE	4	40	B	150	OVER SPARE 9' FR BBL
B SIDE	30x36			150	SPARE AT BBL
C BOT	4	40	B	150	OUTLET IN BH
D SIDE	2	40	B	150	INSTR 8' FR BBL
E SIDE	2	40	B	150	INSTR 1'6" FR BBL
N SIDE	2	40	B	150	INSTR 7'8" FR BBL
M SIDE	2	40	B	150	INSTR 10'4" FR BBL
F TOP	20	40	–	–	BRINKS UNIT
J TOP	3	40	B	150	RUPTURE DISC
TOP	3	40	B	150	VENT
K TOP	4	40	B	150	WITH 3" DIP PIPE
H TOP	(3)	40	B	150	INLET

REV NO.	REVISION	BY	DATE	APPD/INIT	DATE
1	APPROVED FOR DESIGN	RSY	10-30-67		
2					
3					

ES 51 (7/67)

PCB-ARCH-EXT0372353

Monsanto COMPANY

LOCATION THRU 14FT LEVEL

TANK OR PRESSURE VESSEL PERFORMANCE DATA

PROJ/DEPT 811.00

EQUIP. IDENT NO. 1-418
AUTH NO. 1800 PLANT W6K
BY RS YATES DATE 10-18-67
APPD SHEET 1 OF 1

NAME CHLORINATOR No. 9 NO. REQD 1

FUNCTION TO RECEIVE AROCLOR 1235 AND FERRIC CHLORIDE FOR CHLORINATION

OPERATION CONTINUOUS FEED OF MATERIALS. LEVEL CONTROLLED OVERFLOW TO ITEM 1-422

MATERIALS

	MATERIAL	UNITS	INPUT	OUTPUT	
PROCESS	AROCLOR 1235	LBS/HR	5471		
	FERRIC CHLORIDE	LBS/HR	2	2	
	CHLORINE	LBS/HR	1140	10	
	AIR	LBS/HR	154	154	
	HYDROGEN	LBS/HR	1	1	
	HYDROGEN CHLORIDE GAS	LBS/HR		538	
	AROCLOR 1242	LBS/HR		5471	
UTIL					

PERFORMANCE INFORMATION

		UNITS	NORMAL OPERATION	DESIGN BASIS
CAPACITY	WORKING VOLUME	GAL	846	
	FREEBOARD	GAL	846	
	TOTAL VOLUME	GAL	1729	
☒ RETENTION OR ☐ CYCLE TIME		HRS	1.7	
INTERNAL PRESSURE		PSIG	5-10	50
INTERNAL TEMPERATURE		°F	302 - 392	
DENSITY		LBS/GAL	10.7	
AREA OF ☐ JACKET OR ☐ COIL				
HEATING OR COOLING FLUID	FLOW RATE			
	PRESSURE			
	TEMPERATURE		IN OUT	IN OUT
DESIGN CRITERIA		(1)	VAPOR VELOCITY SAME AS VELOCITY IN ANN. CONT. UNIT	
		(2)	LIQUID LEVEL OVER SPARGER EQUAL TO OR GREATER THAN ANN. CONT. UNIT	

EQUIPMENT INFORMATION

TYPE ASME DISHED TOP AND BOTTOM ☒ VERT ☐ HOR DIMENSIONS 4'0" OD 20'0" HIGH/LONG

MATERIALS OF CONSTRUCTION CARBON STEEL CLASS II, SPEC D2.1 STD 3 AND D2.2 STD 3 CORR ALLOW. 1/8 INCH

☐ INTERNAL COIL ☐ EXTERNAL COIL ☐ JACKET

NONE REQD

AGITATOR

NONE REQD

INSTRUMENT CONNECTIONS 9-3" IPS NOZZLES FOR TEMP CONTROL AND INDICATION

INSULATION 1" THICK SPEC K11.2 STD 140 AND K11.3 STD 10 FOR 8FT S.S.

VENTS, PRESSURE RELIEF 2-3" IPS NOZZLES FOR VENT AND RUPTURE DISC

OTHER

TRACE 12 FT OF S.S. FOR STEAM HEAT. SPARGER ACCURDING TO DW6 T5-A-8282 MODIFIED.

NOZZLE SCHEDULE

☐ PER TANK STD ☒ AS BELOW

MK	SIZE NPS	PIPE SCH	FLG TYPE	FLG RATING	NOZZLE FUNCTION
SIDE	4	40	B	150	INLET 3'FR BBL
SIDE	4	40	B	150	OVER SPARE 9'FR BBL
SIDE	20x36			150	SPARG AT BBL
BOT	4	40	B	150	OUTLET IN BH
SIDE	2	40	B	150	INSTR 8'FR BBL
SIDE	2	40	B	150	INSTR 16'FR BBL
SIDE	2	40	B	150	INSTR 7'8½"FR BBL
SIDE	2	40	B	150	INSTR 8'4"FR BBL
TOP	20	40	–	–	BRINKS UNIT
TOP	3	40	B	150	RUPTURE DISC
TOP	3	40	B	150	VENT
TOP	4	40	B	150	WITH 3" DIP PIPE

REV NO.	REVISION	BY	DATE	APPD	DATE
1	APPROVED FOR DESIGN	RSY	10-30-67		
2					
3					

ES 51 (7/67)

PCB-ARCH-EXT0372354

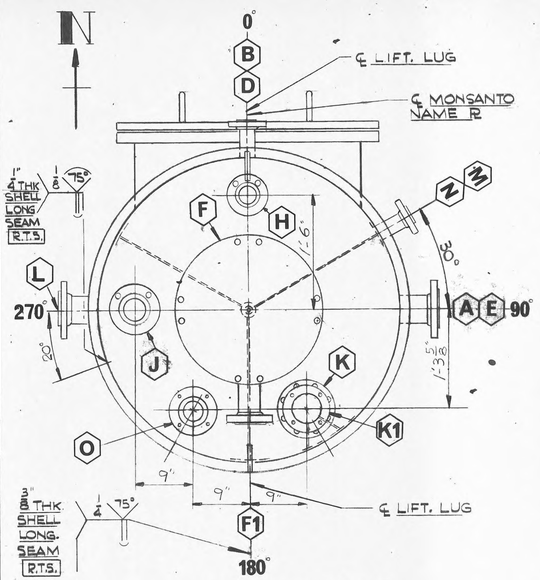

TRUE ORIENTATION

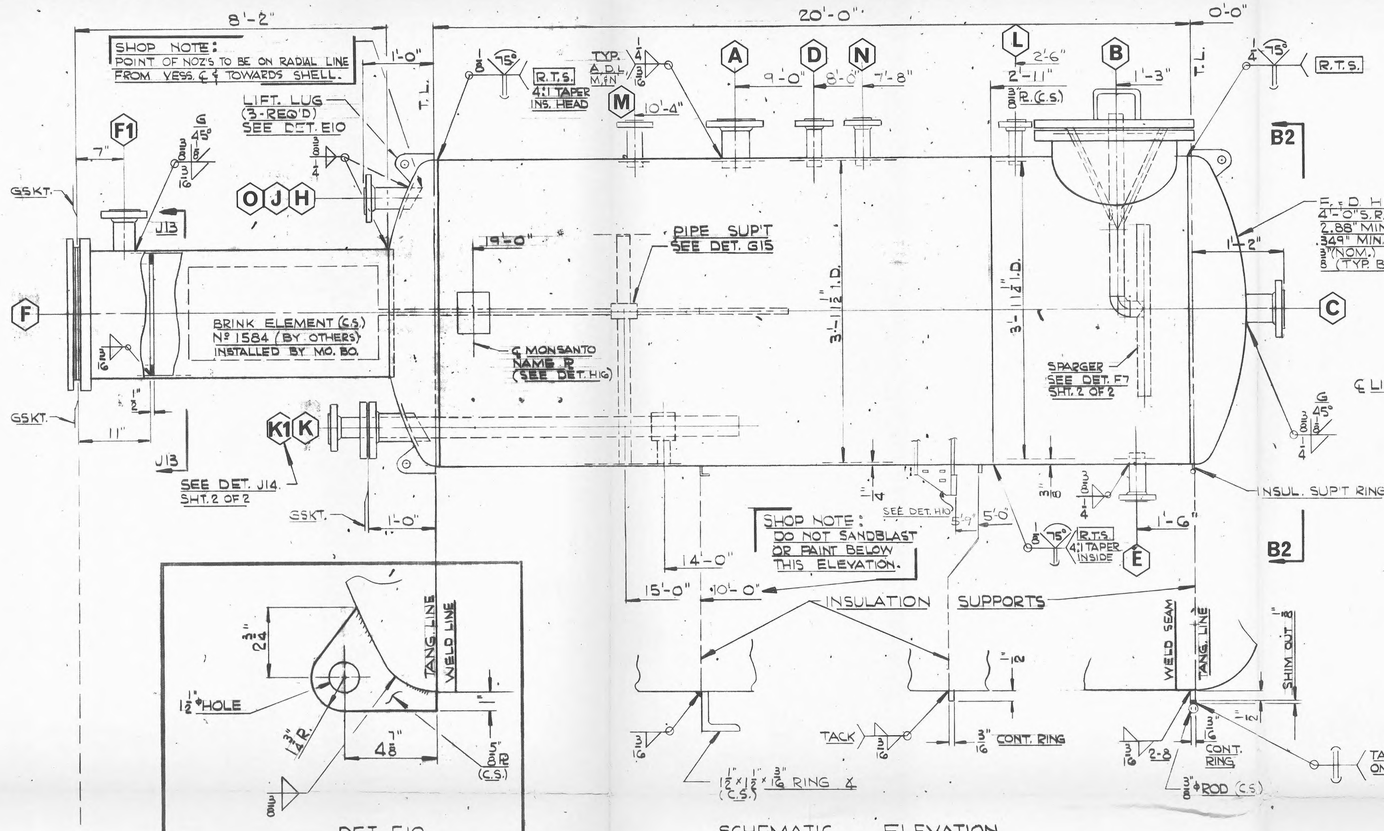

SCHEMATIC ELEVATION

DET. E10
LIFTING LUGS (3-REQ'D)

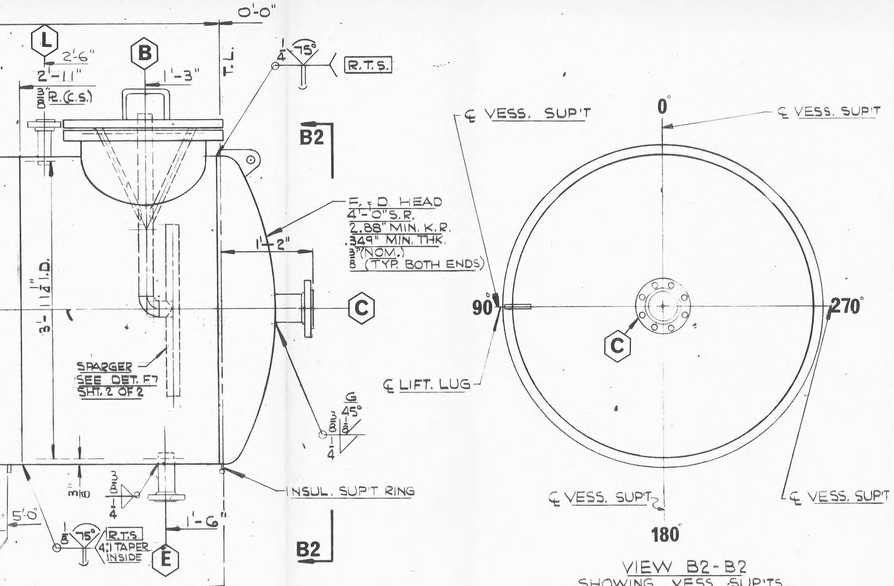

VIEW B2-B2
SHOWING VESS. SUP'TS, LIFTING LUG & NOZZ. C

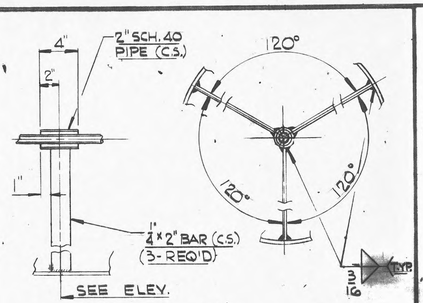

DET. G15
BRINK ELEMENT INT. PIPE SUP'T

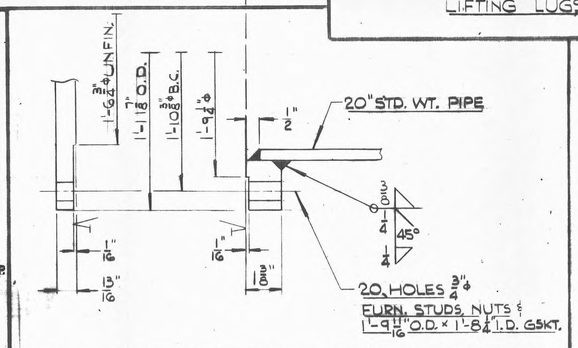

SEE DET. F14 SHT. 2 OF 2

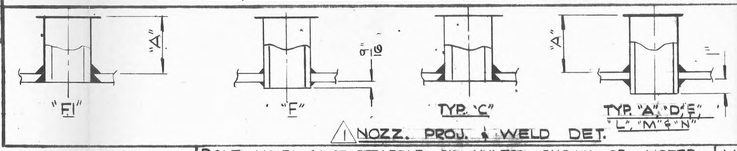

⚠ NOZZ. PROJ. & WELD DET.

BOLT HOLES MUST STRADDLE ℄'S UNLESS SHOWN OR NOTED.

NOZZ.	Nº REQ'D	SIZE	RATING	FACING	TYPE	PAD	NECK	"A"
A	2	4"	150#	R.F.	S.O.	–	SCH. 80	6"
C, K	2	4"	150#	R.F.	S.O.	–	SCH. 80	–
B	1	36"x20"	—	F.F.	R.S.O. W/COVER	–	3/8" PL	4 1/16"
M, N	1	2"	150#	R.F.	S.O.	–	SCH. 160	6"
F	1	20"	—	R.F.	R.S.O. W/BLD.	–	SCH. 20	–
F1	1	3"	150#	R.F.	S.O.	–	SCH. 80	9"
H, J	2	3"	150#	R.F.	S.O.	–	SCH. 80	–
K1	1	3"	150#	R.F.	S.O.	–	SCH. 40	–
D, E	2	1/2"	150#	R.F.	S.O.	–	SCH. 160	6"
C	1	2"	150#	R.F.	S.O.	–	SCH. 160	–

MATERIAL	
SHELL	A-285 GR.C
HEADS	A-285 GR.C
M.W. NECK	A-285 GR.C
M.W. FLG. & COVER	A-515 GR.70
NOZZ. NECKS	A-106 GR.B/A-53-B
NOZZ. FLGS.	A-515 GR.70 (A-181 GR.)
INSUL. RINGS	A-306 GR.55
LIFTING LUGS	A-283 GR.C
BLIND FLG.	A-515 GR.70 (A-181)
INTERNAL PIPE	A-106 GR.B, S.S.B.S. DET. F7 SHT. 2 & DET. G15
STUDS	A-193 GR.B7
NUTS	A-194 GR.2H
VESS. SUPTS & GSKTS	A-283 GR.C 1/8 COMP. ASB. GRAPHITE

GENERAL NOTES

1. FINISH: INS. & OUT.- REMOVE ALL DIRT, GREASE, SLAG, & WELD SPATTER.
2. FINISH OUT. (C.S. ONLY) SAND BLAST TO NEAR WHITE FINISH & APPLY ONE SHOP COAT OF CARBO ZINC Nº11, RED TO A DRY FILM THICKNESS OF 2.5 MILS, IN ACCORD. W/ MONSANTO Kl.3 STD. 1300 (7-65) SAND BLAST & PAINT ABOVE TOP INSUL. & ONLY (10'-0" ELEV.) DO NOT PAINT BELOW 4.

DESIGN CONDITIONS	
CODE	1965 A.S.M.E SECT. VIII
MAX. DESIGN PRESS.	50 P.S.I. + GP.S.I. HYDRO. HD
MAX. DESIGN TEMP.	400°F
RADIOGRAPHY	SPOT
JOINT EFF.	LONG. 85% CIR. 85%
CORR. ALLOW.	1/8"
HYDRO. TEST	84 P.S.I.
TEST BASED ON	1.5 x DESIGN
LIMITED BY	DESIGN
OTHER TESTS	NONE
HEAT TREATMENT	NONE

REFERENCE DRAWINGS	
1800-811.00-MV22	DETAILS - CHLORINATOR Nº 2-418
1800-811.00-M1203	EQUIP. ARR'G'T - THIRD FLOOR

P.O. Nº 800-9-0031
ITEM Nº 4
EQUIP. Nº 02-418.000

WT. EMPTY- 5,400#
WT. FULL OF WATER- 22,700#
CAPACITY- 2,080 GALS.

REF. DRGS. - MONSANTO CO. SKETCH EQUIP. Nº 02-418.000 & SPECS REFERRED TO THEREIN.

ONE REQ'D

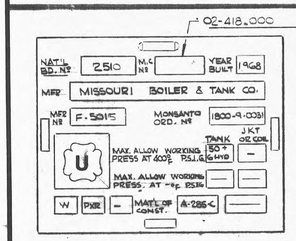

DET. H16
MONSANTO NAME PL
(1-REQ'D) WELDED TO SHELL

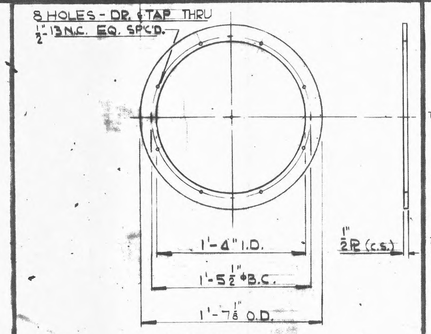

VIEW J13 - J13
RING INSIDE NOZZ. "F"

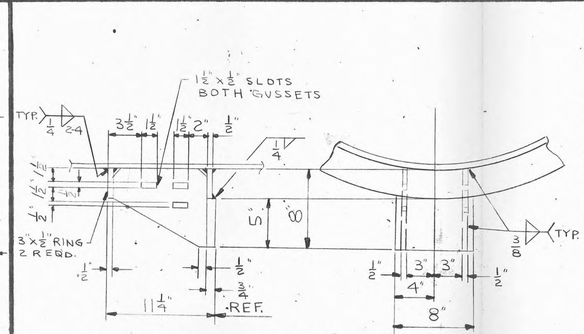

DET. H10
VESS. SUP'TS (4-REQ'D)

THIS DRG. HAS BEEN PREPARED BY MISSOURI BOILER AND TANK CO. FROM INFORMATION SUPPLIED BY MONSANTO COMPANY. SINCE IT MAY CONTAIN INFORMATION PROPRIETARY TO MISSOURI BOILER, THIS DRG. IS NOT TO BE SHOWN TO THIRD PARTIES WITHOUT MISSOURI BOILER'S PERMISSION.

NO.	DATE	REVISION	BY
6			
5			
4			
3			
2			
1			

MISSOURI BOILER AND TANK CO.
ST. LOUIS, MISSOURI 63103

3'-11 1/2" I.D. x 20'-0" T/T VERTICAL CHLORINATOR Nº 2
FOR: MONSANTO CHEMICAL COMPANY
ITEM Nº 4 EQUIP. Nº 02-418.000
SAUGET, ILLINOIS

DATE 2-23-68	JOB NO. F-5015	
DRAWN D.G.	DWG. NO. MD-F-5015	SHEET NO. 1 OF 2
CK'D E.B. APP. E.B.		

REV.	DATE	DESCRIPTION	BY	CK'D.	APP'D.
0	4-15-68	APPROVED FOR CONST	–	–	WPB

MONSANTO COMPANY
CENTRAL ENGINEERING DEPARTMENT, ST. LOUIS, MISSOURI

MONSANTO'S CONFIDENTIAL PROPERTY — This drawing is the confidential property of Monsanto Company and is to be used only by authorized personnel and in the interest of Monsanto. At any time upon request by Monsanto, and in any event when its use is completed, this drawing is to be returned to Monsanto's Central Engineering Department. This drawing shall not be reproduced in whole or part without prior written permission from Monsanto.

DIVISION: ORGANIC 02 PLANT: KRUMMRICH

CHLORINATOR Nº 418
GENERAL ARRANGEMENT & PLAN

	BY	DATE	APPROVED	DATE	APPROVED	DATE
DRAWN					WPBarker	4-5-68
CHECKED						
SCALE						

C.E.A. No.	PLANT	SIZE	DEPARTMENT	TYPE	NUMBER	REV.
1800	3	D	811.00	MV	21	0

NOTICE: This drawing is the property of Monsanto Company and must be returned, without reproduction or duplication, at any time upon request, but in any event at completion of the work or job. While in the possession of the recipient, it must be properly safeguarded against revelation or disclosure to any one except those employes who require it for the work or job. The recipient must keep confidential, and require his (its) employes to keep confidential, the information contained hereon.

COMPANY CONFIDENTIAL
This drawing is the property of Monsanto Company and must be accounted for. Information hereon is confidential and must not be reproduced, revealed to unauthorized persons or sent outside the company without proper authorization.

PRINTS ISSUED TO FIELD—BY WPBarker DATE 4-15-68 REV. 0

PCB-ARCH-EXT0372355

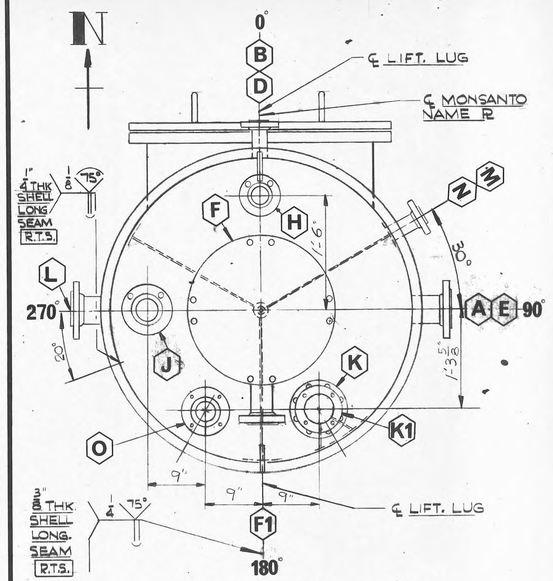

TRUE ORIENTATION

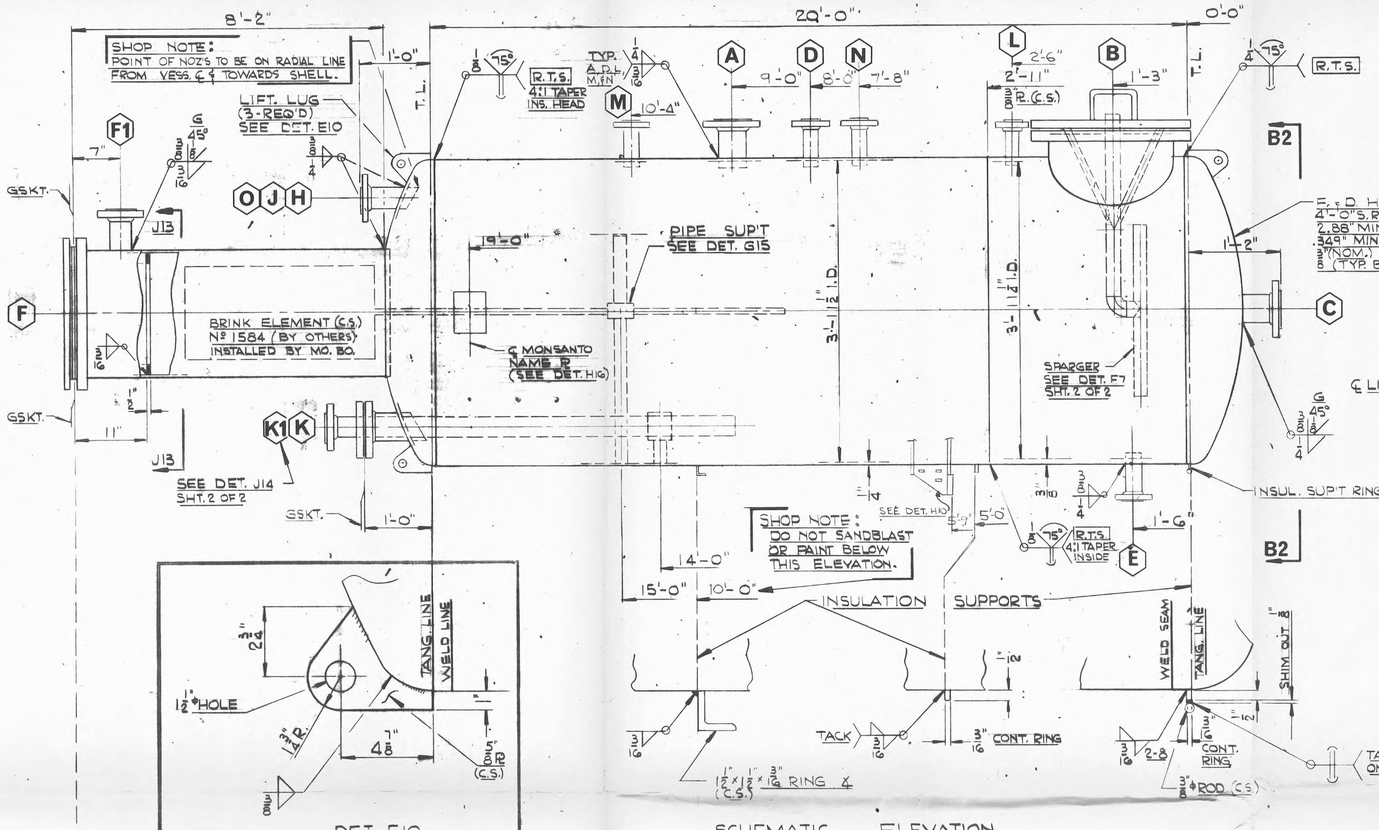

SCHEMATIC ELEVATION

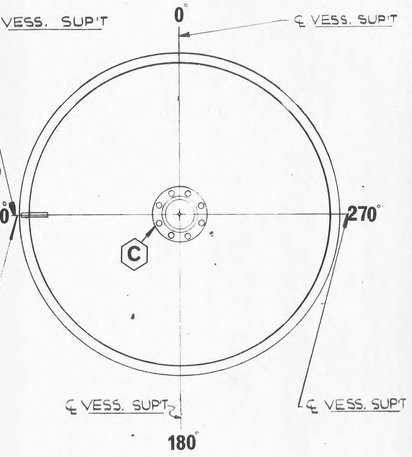

VIEW B2 - B2
SHOWING VESS. SUP'TS, LIFTING LUG & NOZZ. C

DET. E10
LIFTING LUGS (3-REQ'D)

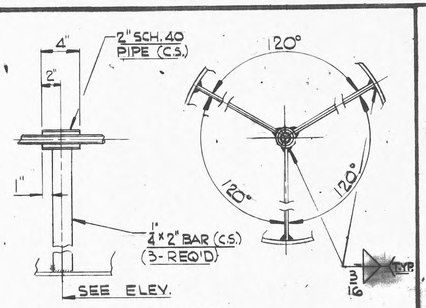

DET. G15
BRINK ELEMENT INT. PIPE SUP'T

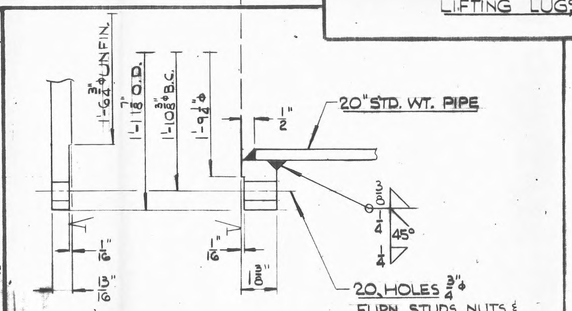

SEE DET. F14 SHT. 2 OF 2

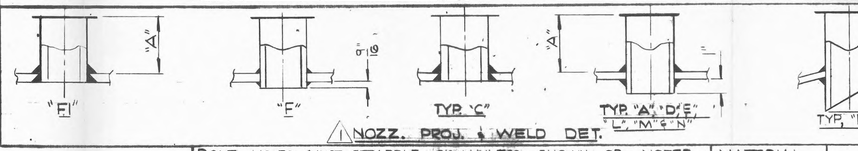

⚠ NOZZ. PROJ. & WELD DET.

BOLT HOLES MUST STRADDLE ℄'S UNLESS SHOWN OR NOTED.

NOZZ.	Nº REQ'D	SIZE	RATING	FACING	TYPE	PAD	NECK	"A"
A	2	4"	150#	R.F.	S.O.	-	SCH. 80	6"
C, K	2	4"	150#	R.F.	S.O.	-	SCH. 80	-
B	1	36"x20"	——	F.F.	R.S.O. W/ COVER	-	3/8" PL	4 1/16"
M, N	1	2"	150#	R.F.	S.O.	-	SCH. 160	6"
F	1	20"	——	R.F.	R.S.O. W/BLD.	-	SCH. 20	-
F1	1	3"	150#	R.F.	S.O.	-	SCH. 80	9"
H, J	2	3"	150#	R.F.	S.O.	-	SCH. 80	-
K1	1	3"	150#	R.F.	S.O.	-	SCH. 40	-
D, E	2	12"	150#	R.F.	S.O.	-	SCH. 160	6"
C	1	2"	150#	R.F.	S.O.	-	SCH. 160	-

MATERIAL	
SHELL	A-285 GR.C
HEADS	A-285 GR.C
M.W. NECK	A-285 GR.C
M.W. FLG. & COVER	A-515 GR.70
NOZZ. NECKS	A-106 GR.B/A-53-B
NOZZ. FLGS.	A-515 GR.70 (A-181 GR.I)
INSUL. RINGS	A-306 GR.55
LIFTING LUGS	A-283 GR.C
BLIND FLG.	A-515 GR.70 (A-181)
INTERNAL PIPE	A-106 GR.B & S.S. PER DET. F7 SHT. 2 & G15
STUDS	A-193 GR.B7
NUTS	A-194 GR.2H
VESS. SUP'TS & GUSSETS	A-285 GR.C (SHOP PLATE)

DESIGN CONDITIONS	
CODE	1965 A.S.M.E. SECT. VIII
MAX. DESIGN PRESS.	50 P.S.I. + GPS.I. HYDRO. HD
MAX. DESIGN TEMP.	400°F
RADIOGRAPHY	SPOT
JOINT EFF.	LONG. 85% CIR. 85%
CORR. ALLOW.	1/8"
HYDRO. TEST	84 P.S.I.
TEST BASED ON	1.5 x DESIGN
LIMITED BY	DESIGN
OTHER TESTS	NONE
HEAT TREATMENT	NONE

GENERAL NOTES

1. FINISH: INS. & OUT: REMOVE ALL DIRT, GREASE, SLAG, & WELD SPATTER.
2. FINISH OUT. (C.S. ONLY) SANDBLAST TO NEAR WHITE FINISH & APPLY ONE SHOP COAT OF CARBO ZINC Nº11, RED TO A DRY FILM THICKNESS OF 2.5 MILS. IN ACCORD. W/ MONSANTO KI.3 STD. 1300 (7-65) SANDBLAST & PAINT ABOVE TOP INSUL. & ONLY (10'-0" ELEV.) DO NOT PAINT BELOW 4.

REFERENCE DRAWINGS	
1800-811.00-MV22	DETAILS - CHLORINATOR Nº 2-418
1800-811.00-M203	EQUIP. ARR'G'T - THIRD FLOOR

P.O. Nº 1800-9-0031
ITEM Nº 4
EQUIP. Nº 02-418.000

WT. EMPTY - 5,400#
WT. FULL OF WATER - 22,700#
CAPACITY - 2,080 GALS.

ONE REQ'D

REF. DRGS. - MONSANTO CO. SKETCH EQUIP. Nº 02-418.000 & SPECS REFERRED TO THEREIN.

NOTICE: This drawing is the property of Monsanto Company and must be returned, without reproduction or duplication, at any time upon request, but in any event at completion of the worker job. While in the possession of the recipient, it must be properly safeguarded against revelation or disclosure to any one except those employes who require it for the work or job. The recipient must keep confidential, and requires his (its) employes to keep confidential, the information contained herein.

COMPANY CONFIDENTIAL
This drawing is the property of Monsanto Company and must be accounted for. Information hereon is confidential and must not be reproduced, revealed to unauthorized persons or sent outside the company without proper authorization.

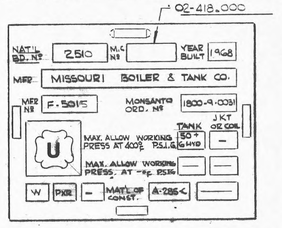

DET. H16
MONSANTO NAME PL
(1-REQ'D) WELDED TO SHELL

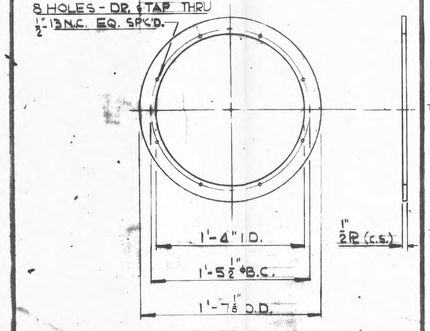

VIEW J13 - J13
RING INSIDE NOZZ. "F"

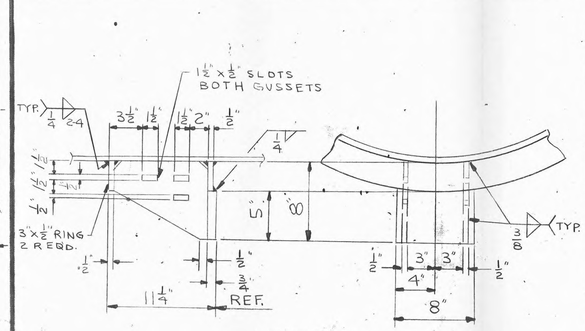

DET. H10
VESS. SUP'TS (4-REQ'D)

NO.	DATE	REVISION	BY
6			
5			
4			
3			
2			
1			
O	4-15-68	APPROVED FOR CONST	- - MB.

THIS DRG. HAS BEEN PREPARED BY MISSOURI BOILER AND TANK CO. FROM INFORMATION SUPPLIED BY MONSANTO COMPANY. SINCE IT MAY CONTAIN INFORMATION PROPRIETARY TO MISSOURI BOILER, THIS DRG. IS NOT TO BE SHOWN TO THIRD PARTIES WITHOUT MISSOURI BOILER'S PERMISSION.

MISSOURI BOILER AND TANK CO.
ST. LOUIS, MISSOURI 63103

3-11 1/2" I.D. x 20'-0" T/T VERTICAL CHLORINATOR Nº 4
FOR: MONSANTO CHEMICAL COMPANY
ITEM Nº 4 EQUIP. Nº 02-418.000
SAUGET, ILLINOIS

DATE 2-25-68 | JOB NO. F-5015
DRAWN D.G. | DWG. NO. MD-F-5015 | SHEET NO. 1 OF 2
CK'D E.B. | APP. E.B.

MONSANTO COMPANY
CENTRAL ENGINEERING DEPARTMENT, ST. LOUIS, MISSOURI

MONSANTO'S CONFIDENTIAL PROPERTY — This drawing is the confidential property of Monsanto Company and is to be used only by authorized personnel and in the interest of Monsanto. At any time upon request by Monsanto, and in any event when its use is completed, this drawing is to be returned to Monsanto's Central Engineering Department. This drawing shall not be reproduced in whole or part without prior written permission from Monsanto.

DIVISION: ORGANIC 02 | PLANT: KRUMMRICH

CHLORINATOR Nº 418
GENERAL ARRANGEMENT & PLAN

	BY	DATE	APPROVED	DATE	APPROVD	DATE
DRAWN					PPBard for	4-15-68
CHECKED						
SCALE						

C.E.A. No.	PLANT	SIZE	DEPARTMENT	TYPE	NUMBER	REV.
1800	3	D	811.00	MV	21	O

PRINTS ISSUED TO FIELD—BY [illegible] DATE 4-15-68 REV. O

PCB-ARCH-EXT0372356

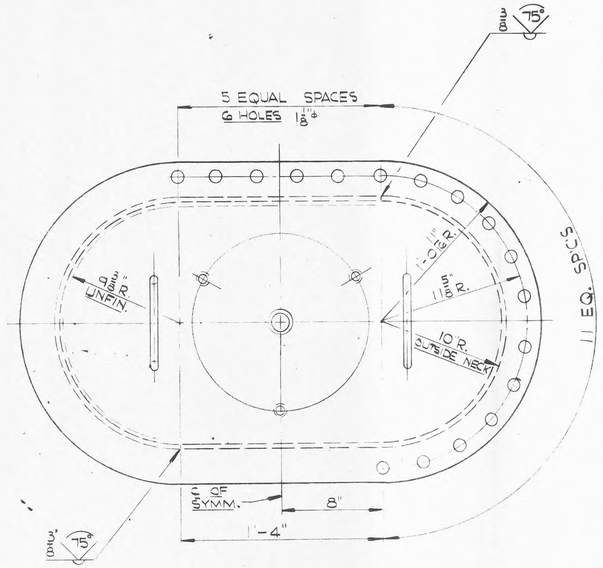

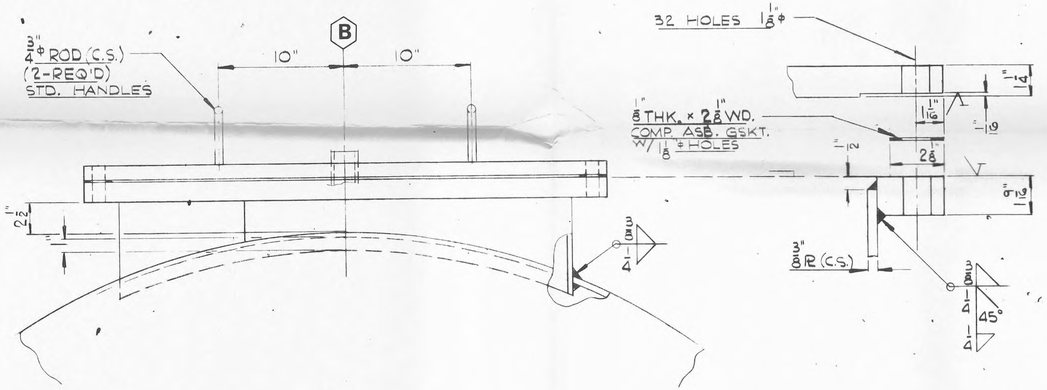

DET. F14
MANWAY "B"

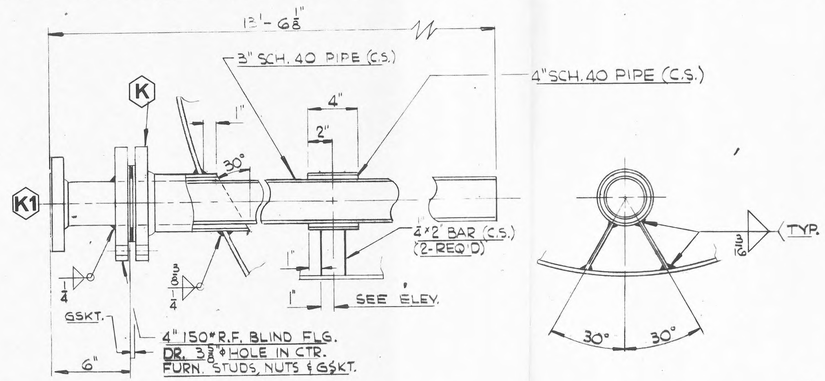

DET. J14
DIP PIPE K1 & SUPT

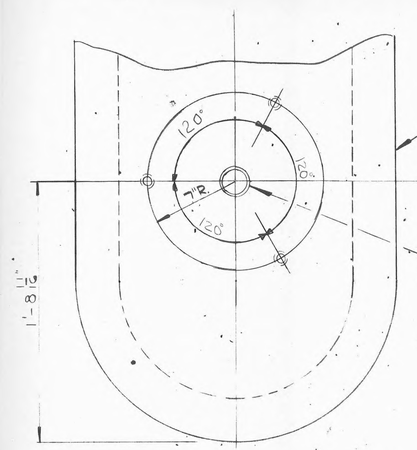

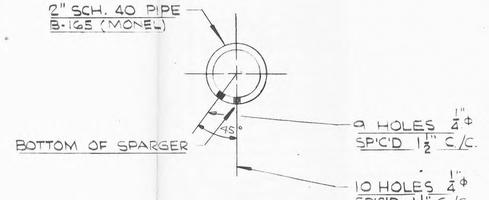

SECTION C4-C4
(TYP. FOR ALL 4 ARMS)

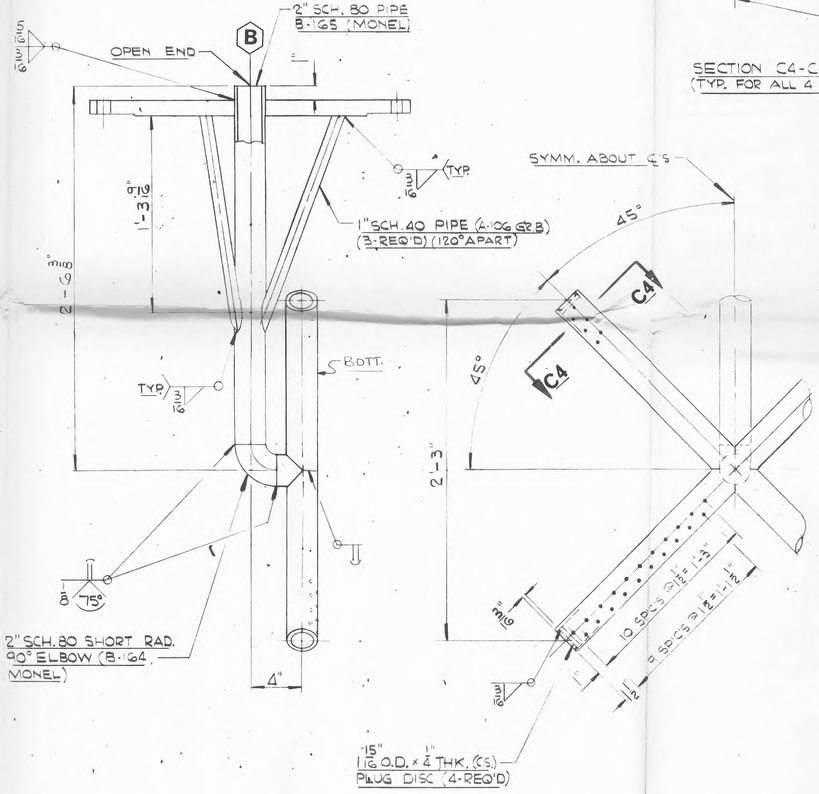

DET. F7
SPARGER FOR M.W. "B"

THIS DRG. HAS BEEN PREPARED BY MISSOURI BOILER AND TANK CO. FROM INFORMATION SUPPLIED BY MONSANTO COMPANY. SINCE IT MAY CONTAIN INFORMATION PROPRIETARY TO MISSOURI BOILER, THIS DRG. IS NOT TO BE SHOWN TO THIRD PARTIES WITHOUT MISSOURI BOILER'S PERMISSION.

NO.	DATE	REVISION	BY

MISSOURI BOILER AND TANK CO.
ST. LOUIS 3, MISSOURI

– MISC. DETAILS –

FOR: MONSANTO CHEMICAL COMPANY
ITEM Nº 4 EQUIP. Nº 02-418.000
SAUGET, ILL.

DATE 2-23-68	JOB NO. F-5015	
DRAWN D.G	DWG. NO. MD- F-5015	SHEET NO. 2 OF 2
CKD. E.B. / APPROVED E.B.		

REV.	DATE	DESCRIPTION	BY	CKD.	APPD.
0	4-15-68	APPROVED FOR CONST.	-	-	

MONSANTO COMPANY
CENTRAL ENGINEERING DEPARTMENT, ST. LOUIS, MISSOURI

MONSANTO'S CONFIDENTIAL PROPERTY — This drawing is the confidential property of Monsanto Company and is to be used only by authorized personnel and in the interest of Monsanto. At any time upon request by Monsanto, and in any event when its use is completed, this drawing is to be returned to Monsanto's Central Engineering Department. This drawing shall not be reproduced in whole or part without prior written permission from Monsanto.

DIVISION: ORGANIC 02 | PLANT: KRUMMRICH

DETAILS OF MANWAY, DIP PIPE & SPARGER CHLORINATOR Nº 418

	BY	DATE	APPROVED	DATE	APPROVED	DATE
DRAWN						
CHECKED						
SCALE	NONE					

C.E.A. No.	PLANT	SIZE	DEPARTMENT	TYPE	NUMBER	REV.
1800	3	D	811.00	MV	22	0

1800-811.00-MV21	CHLOR. Nº 2-418-PLAN
1800-811.00-M203	EQUIP. ARRGT THIRD FLR.

REFERENCE DRAWINGS

NOTICE: This drawing is the property of Monsanto Company and must be returned, without reproduction or duplication, at any time upon request, but in any event at completion of the work or job. While in the possession of the recipient, it must be properly safeguarded against revelation or disclosure to any one except those employee who require it for the work or job. The recipient must keep confidential, and require his (its) employees to keep confidential, the information contained hereon.

COMPANY CONFIDENTIAL
This drawing is the property of Monsanto Company and must be accounted for. Information hereon is confidential and must not be reproduced, revealed to unauthorized persons or sent outside the company without proper authorization.

PRINTS ISSUED TO FIELD—BY [illegible] DATE 4-[illegible]-68 REV. 0

F-5015 SHT. 2 OF 2

PCB-ARCH-EXT0372357

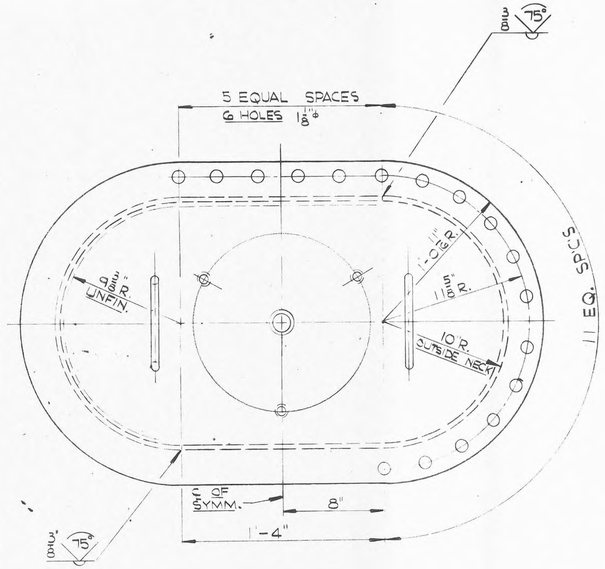

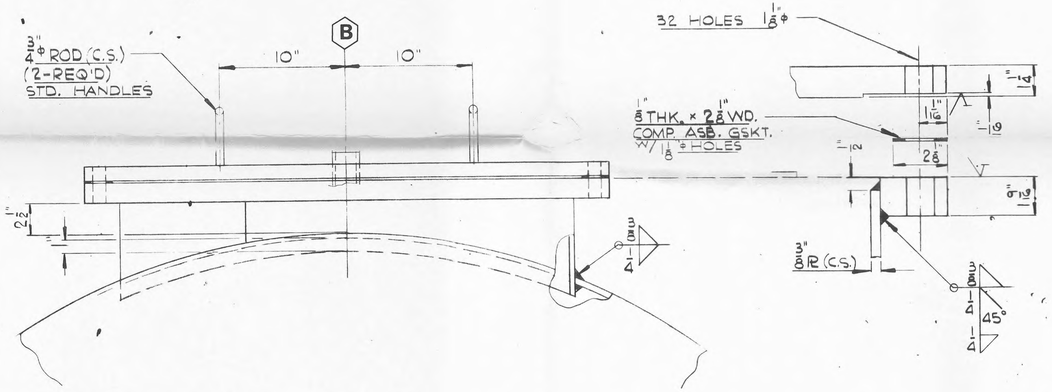

DET. F14
MANWAY "B"

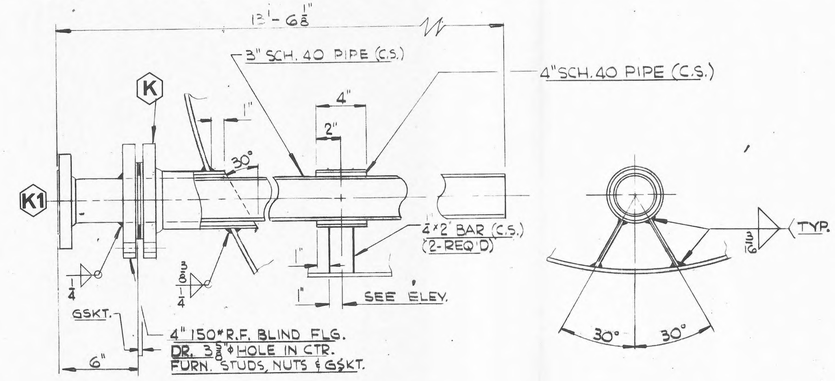

DET. J14
DIP PIPE K1 & SUP'T

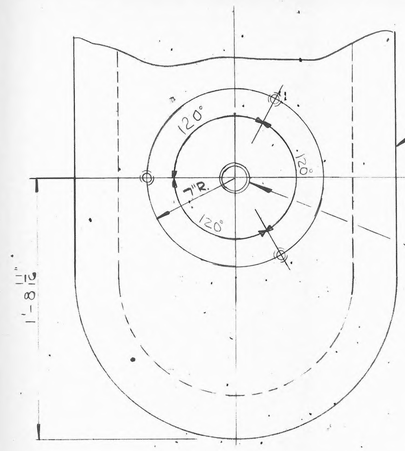

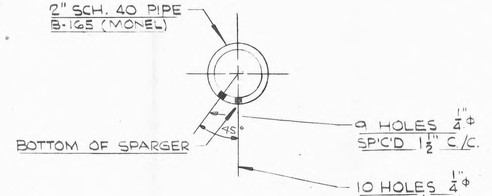

SECTION C4-C4
(TYP. FOR ALL 4 ARMS)

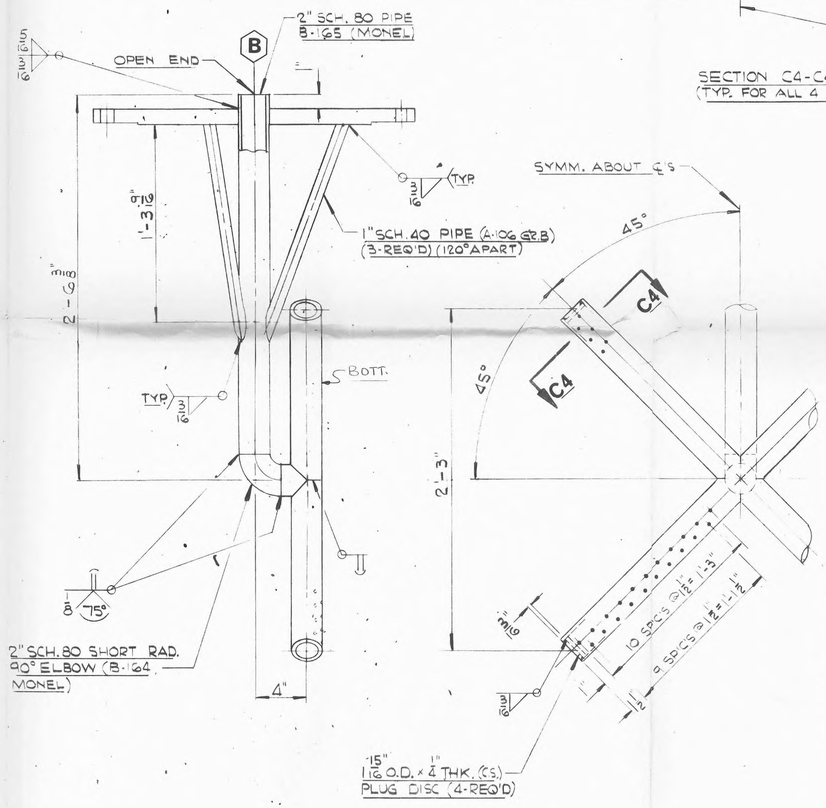

DET. F7
SPARGER FOR M.W. "B"

THIS DRG. HAS BEEN PREPARED BY MISSOURI BOILER AND TANK CO. FROM INFORMATION SUPPLIED BY MONSANTO COMPANY. SINCE IT MAY CONTAIN INFORMATION PROPRIETARY TO MISSOURI BOILER, THIS DRG. IS NOT TO BE SHOWN TO THIRD PARTIES WITHOUT MISSOURI BOILER'S PERMISSION.

NO.	DATE	REVISION	BY
0	4-15-68	APPROVED FOR CONST.	-

MISSOURI BOILER AND TANK CO.
ST. LOUIS 3, MISSOURI

– MISC. DETAILS –

FOR: MONSANTO CHEMICAL COMPANY
ITEM Nº 4 EQUIP. Nº 02-418.000
SAUGET, ILL.

DATE 2-23-68	JOB NO. F-5015	
DRAWN D.G.	DWG. NO. MD- F-5015	SHEET NO. 2 OF 2
CK'D E.B. / APPROVED E.B.		

MONSANTO COMPANY
CENTRAL ENGINEERING DEPARTMENT, ST. LOUIS, MISSOURI

MONSANTO'S CONFIDENTIAL PROPERTY — This drawing is the confidential property of Monsanto Company and is to be used only by authorized personnel and in the interest of Monsanto. At any time upon request by Monsanto, and in any event when its use is completed, this drawing is to be returned to Monsanto's Central Engineering Department. This drawing shall not be reproduced in whole or part without prior written permission from Monsanto.

DIVISION: ORGANIC 02 PLANT: KRUMMRICH

DETAILS OF MANWAY, DIP PIPE & SPARGER CHLORINATOR Nº 418

	BY	DATE	APPROVED	DATE	APPROVED	DATE
DRAWN						
CHECKED						
SCALE	NONE					

C.E.A. No.	PLANT	SIZE	DEPARTMENT	TYPE	NUMBER	REV.
1800	3	D	811.00	MV	22	0

1800-811.00-MV21	CHLOR. Nº 2-418-PLAN
1800-811.00-M203	EQUIP. ARRGT THIRD FLR.

REFERENCE DRAWINGS

NOTICE: This drawing is the property of Monsanto Company and must be returned, without reproduction or duplication, at any time upon request, but in any event at completion of the work or job. While in the possession of the recipient, it must be properly safeguarded against revelation or disclosure to any one except those employes who require it for the work or job. The recipient must keep confidential, and require his (its) employes to keep confidential, the information contained hereon.

COMPANY CONFIDENTIAL
This drawing is the property of Monsanto Company and must be accounted for. Information hereon is confidential and must not be reproduced, revealed to unauthorized persons or sent outside the company without proper authorization.

PRINTS ISSUED TO FIELD—BY [signature] DATE 4-15-68 REV. 0

F-5015 SHT. 2 OF 2.

PCB-ARCH-EXT0372358