Return to permanent Manual File

PLAINTIFF'S EXHIBIT
BEA-28
PENGAD-Bayonne,N.J

1984 —

First Issue

(Found some mistakes — Reprinting needed)

ROOFING, WATERPROOFING and INSULATION SYSTEMS

* This issue was used in the "Sure" 1984 Catalog

Sure 1984

Revised & new issued 81 Adams



SC-BE-20040

Preface

This manual contains recommended roofing specifications and procedures based on accepted good roofing practices and Koppers years of experience. They are intended to provide the architect, engineer, general contractor, and roofer with the proper information to plan and construct the best roof systems with the most time-proven materials available today.

The availability of a Koppers guarantee for roofing and flashing constructed according to the information contained in this manual under Koppers guarantee procedure, and the publishing of these specifications and information shall not be construed as creating any warranty, expressed or implied, with regard to any roofing or flashing for which a guarantee has not been issued.

This roofing manual supersedes all previous roofing manuals published by Koppers in Sweets Catalogs.

The specifications and details contained in this manual have been determined to cover the proper procedure for long lasting roofing systems for most areas of our country.

In certain locations, minor variations in details and specifications may be appropriate due to unusual local conditions, such as wind, temperature, humidity, etc. To assure the best application of the proper specifications and details for your area we recommend you consult your Koppers representative.

Table of Contents 1984

3 Preface

4-5 Product Guide

6 Guaranteed Roofing Program

BUILT-UP ROOFING SYSTEMS

7 Koppers Coal Tar Built-Up Roofing
Material and System Discussion

8-12 General Requirements & Special Conditions
Coal Tar Built-Up Roofing

13-14 Roof Specifications
Coal Tar Built-Up Roofing

15 Special Applications
Water Retaining Roof

16 Flashing Specifications
Built-Up Roof Applications

SINGLE-PLY ROOFING SYSTEMS

21-26 KMM® Membrane Roofing Systems
Materials and System Discussion
Terminology
Application

27-29 KMM Roofing Specifications
Specifications No. 610-620
Specification No. 630
Specification No. 630 III
Specification No. 690

30-32 KMM Flashing Specification
Specification No. 710
Specifications No. 720-730
Specification No. 760
Flashing Details

WATERPROOFING AND DAMPPROOFING SYSTEMS

33-36 Waterproofing and Dampproofing Systems
Coal Tar Membrane Waterproofing
KMM Membrane Waterproofing
Specifications No. 640-650

36 Liquid and Mastic Applied Waterproofing and Dampproofing Systems
Hydroshield Mastic 451
Liquid Asphalt 480

ROOF INSULATION

37-40 Exeltherm Xtra® Roof Insulation

REINFORCEMENT FABRICS

41-43 Specification and Technical Data

ROOF MAINTENANCE PRODUCTS AND SYSTEMS

44-47 Roof Maintenance Products and Systems
Roof Resaturants
Heavy Duty Roof Shield System
Koppers Aluminum Roof Coatings

Notice:

This roofing specification manual contains the latest and best available information as derived from Koppers long experience in the roofing industry. The design criteria and details contained herein have been compiled and are offered as a guide for consideration to assist the architect, owner and roofer in an attempt to provide the best roof possible. Responsibility, however, for design of any roofing system, remains with the architect or engineer and building owner.

The contents of the manual are subject to change at the discretion of Koppers Company, Inc. as future developments and experience are achieved.

Product Guide

The products listed below are manufactured to meet the highest quality standards set by Koppers Company, Inc. They are formulated specifically for use in roof and roof maintenance and waterproofing applications.

Additional information on these products may be obtained in other sections of this manual or by contacting your Koppers representative.

The products listed below are manufactured to meet applicable Federal and ASTM specifications. If a certification is required on any of these products, it must be requested at the time of order placement.

Products	Description	Federal Spec.	ASTM Spec.	Page No.
Bitumens				
Coal Tar Bitumen	Coal Tar based roofing and waterproofing bitumen	•	D-450-78 Type III	12
Asphalt Type III	Petroleum derived asphalt suitable for roofing applications (Type III — Steep asphalt)	•	D-312-78 Type III	12
Felts				
#15 Tarred Felt	Coal Tar Saturated Organic Fiber Felt	HH-R-595 B Type 15°C Style A	D-227	12
#15 Asphalt Felt	Asphalt saturated organic felt	HH-R-595B	D-226	8
Glass Fiber Felt	Bituminous resin coated, inorganic, ply sheet		D-2178 Type IV	14
Reinforced Base Flashing	Asphalt coated — Fabric reinforced, base flashing	•	•	16
Vented Base Sheet	Perforated asphalt saturated and surface coated organic fiber felt.	•	D-2626 Except for perforations	11
#43 Coated Base Sheet	Asphalt Saturated and Surface Coated Organic Fiber Felt		D-2626	12
Single-Ply Membrane systems				
KMM® Aluminum Membrane	Aluminum Surface — Single Ply — Five layer laminated roofing membrane	•	•	21
KMM® Standard Membrane	Single Ply — Five layer laminated roofing and waterproofing membrane	•	•	21
Bituminous Aggregate Binder (BAT)	For use with the KMM BAT Topping only	•	•	26
KMM Adhesive	A tenacious asphalt adhesive formulated specifically for adhering KMM membrane	•	•	21
Insulations				
Exeltherm Xtra®	Closed cell phenolic foam with integrally bonded faces	•	•	37
Fabrics				
Tar or Asphalt Saturated Cotton (Std. Grade)	A woven cotton fabric saturated with tar or asphalt	•	•	42
Tar or Asphalt Saturated Cotton (Spec. Grade)	A woven cotton fabric with higher thread count than above grade	SS-C-450A	D-173	42
Glasfab®	A woven glass membrane available in 20 x 10 or 20 x 20 threads per inch — asphalt or tar coated	HH-C-466b	D-1668	42
Glascoat®	Same as above, except coated with white resin	•	D-1668	42
Jute	Asphalt saturated jute, commonly referred to as treated burlap	HH-B-00600	D-1327	42
U.F. Mat (White)	A white, lightweight mat comprised of the glass filaments in a random arrangement reinforced with a swirl pattern	•	•	43
U.F. Mat (Coated)	Same as above, coated with asphalt	•	•	43
Standard Mesh	Medium weight, white glass strands bound together in a random pattern	•	•	43
Heavy Duty Mesh	Heavy asphalt saturated glass fibers in jackstraw pattern	•	•	43
Patching Glass	Same as heavy duty mesh — cut into convenient size rolls	•	•	43
Stonemat	A polyester underlayment for KMM loose aggregate topping	•	•	21

Products	Description	Federal Spec.	ASTM Spec.	Page No.
Roof cements				
Flash-on #441	Flashing cement formulated for weathering and flow resistance	SS-C-153 Type I	D-2822 Type	—
Flashing Cement	Not as heavy consistency as Flash-on #441	SS-C-153 Type I	D-2822 Type I	—
Hydroshield	Asphalt cutback. Formulated for application in all weather. Readily bonds to wet surface. Trowel or brush grades.	•	•	36
Tar Roof Cement	Tar based plastic cement	SS-C-153 Type II	•	—
Roof coatings				
Emulsions				
Liquid Asphalt	Asphalt emulsion. Will not alligator if properly applied. Heavy bodied, exceptionally high quality, non-fibrated clay emulsion.	•	D-1227 Type III D-1187 Type A	36
Liquid Asphalt 472	Asphalt emulsion. High quality asbestos fibrated medium body, clay emulsion	SS-R-1781 Type I	D-1227 Type I	—
Liquid Asphalt 484	Fiber glass reinforced, asphalt emulsion	•	•	—
Cutbacks				
Asphalt Roof Coating 454	Medium body, asbestos fibrated cutback coating	SS-A-694D	D-2823 Type I	—
Fiber Coating 415	Tar cutback. Penetrates and resaturates tar and gravel roofs	SS-C-540b	N/A	45
turants				
f Resaturant 425	Asphalt Cutback. Combines maximum penetration and coating properties	•	•	45
Roof Resaturant L.O. 410	High quality low odor resaturant.	•	•	—
Roof Resaturant 410	Highest quality tar resaturant available. Excellent penetration and softening qualities.	•	•	45
Primers				
High-Pen Primer 452	Thin asphalt cutback primer with maximum penetrating capabilities	SS-A-701	D-41	16
Coal Tar Concrete Priming Oil	Coal tar based primer for roofing and waterproofing applications	•	D-43	34
Adhesives				
CP Adhesive	Superior asphalt cutback adhesive for asphalt felt applications	•	•	—
Reflective roof coatings				
Alum. Roof Coating 434	Contains 3 lbs. aluminum paste per gallon. Non-fibrated.	TT-C-00493	D-2824 Type I	47
Alum. Roof Coating 435	Reinforced with asbestos fibers. Contains 3 lbs. aluminum paste per gallon.	TT-C-498B	D-2824 Type II	47
Alum. Roof Coating 444	Contains 2 lbs. aluminum paste per gallon. Non-fibrated.	•	•	47
Alum. Roof Coating 445	Contains 2 lbs. aluminum paste per gallon. Reinforced with asbestos fibers.	•	•	47
Colored Roof Coating (White)	White acrylic emulsion decorative coating. To be used over new Liquid Asphalt 480.	•	•	—
Caulkings				
Acrylic #400	One part, gunnable, acrylic caulking.	•	•	—

• **icable Federal and/or ASTM Guide Specifications are not available for this product.**

Koppers Roof Guarantee Program

Koppers Guarantees are available for those roofing specifications listed in this manual. To qualify for a Koppers Roofing Guarantee, roofing and flashing must be constructed in accordance with Koppers Specifications, with Koppers materials, and by a roofing contractor authorized by Koppers.

Prior to the beginning of any guaranteed roof application, the contractor must apply for the required document in accordance with Koppers standard procedures.

General requirements for guaranteed roof applications:

1. All roofing to be guaranteed must be constructed in conformance with Koppers specifications.
2. Koppers guarantees are not available for residential roofing.
3. Koppers guarantees are transferable upon timely written notice of change of property ownership.
4. Koppers guarantees are available within the Continental United States in all areas except those areas where Koppers does not presently provide inspection service.
5. Approved flashings may be guaranteed for terms up to but not exceeding the term for which the roof is guaranteed.
6. Charges for roofing guarantees are made on a per square (100 sq. ft.) basis of the roofing membrane.

Coverage:

Koppers roof guarantees provide for repairs of leaks to the roofing not occasioned by defects in the building abuse or extreme weather conditions during the term of the guarantee up to the monetary limit specified in the guarantee. Coal Tar Bitumen and KMM Standard Roof System Guarantees do not make exception to roof areas with standing water.

Roof guarantees DO NOT cover the repair, installation or replacement cost of the following:

1. Decking Materials.
2. Vapor retarders.
3. Insulation products (except KMM IRMA and Gold Seal Guarantee systems).
4. Metal work.
5. Products in the roof assembly furnished by others.
6. Damage to the guaranteed roofing or flashing caused by the use of the products listed in 1 through 5 above, their installation or attachment.
7. Vandalism or owner abuse.

Koppers reserves the right to cancel any guarantee if the roof is damaged due to causes not covered by the guarantee if it is determined that the roof's satisfactory performance for the remaining term of the guarantee is impaired. Cancellation due to damage of this type does not provide for any refund of the original cost.

GOLD SEAL GUARANTEE

Koppers offers its Gold Seal guarantee on certain roofing systems that include the use of Exeltherm Xtra (Koppers phenolic insulation board.) The Gold Seal Guarantee is a limited liability guarantee offered for a period of ten years. It provides the building owner coverage against leaks directly caused by the roof membrane, composition or KMM base flashing, or Exeltherm Xtra roof insulation.

The Gold Seal guarantee program is applicable for KMM Membrane and Coal Tar systems only. Coverage includes both materials and workmanship.

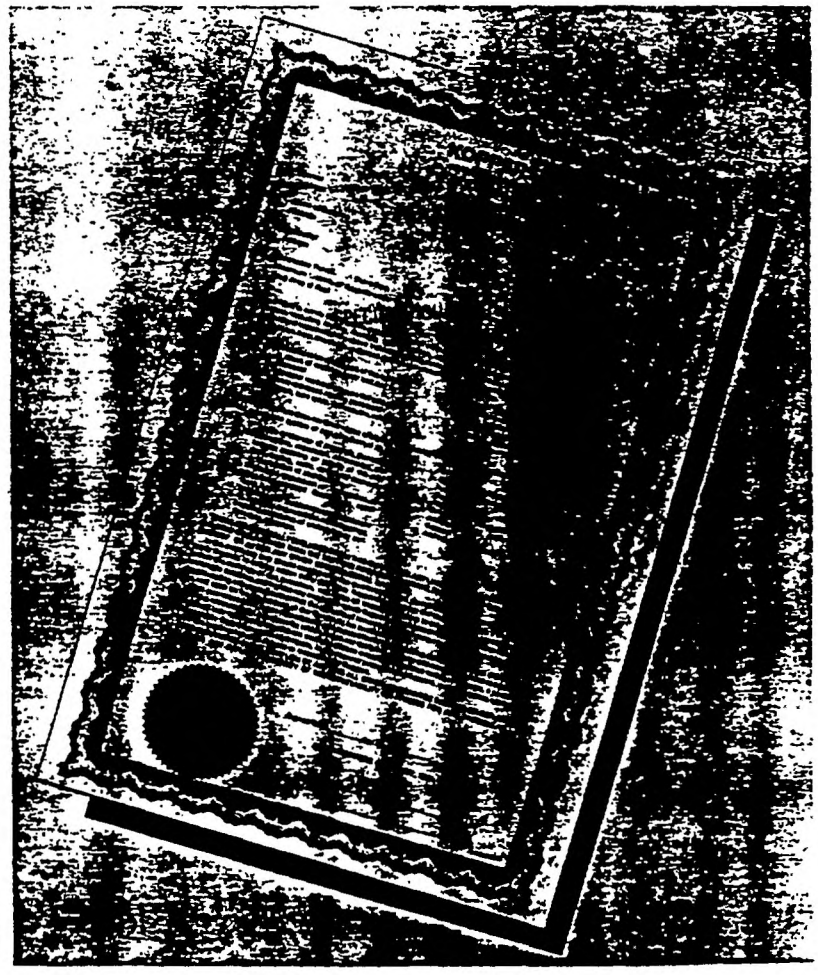

OTHER GUARANTEES

Built-Up Roof Guarantees

Koppers guarantees are available for 5, 10, 15 or 20 year terms, and only cover coal tar built-up roofing and flashings where approved. The 5 and 10 year guarantees carry a renewable option provided Koppers standard procedures are followed.

Single-Ply KMM Guarantees

A five-year guarantee with a five-year renewal option. KMM membrane applications only.

KMM IRMA Guarantee

A ten-year guarantee covering watertightness and insulation efficiency (80% of the original thermal resistance).

BUILT-UP ROOFING SYSTEMS

Coal Tar Bitumen Built-Up Roofing
Materials and System Discussion

KOPPERS
Architectural and Construction Materials

7 1/KOP

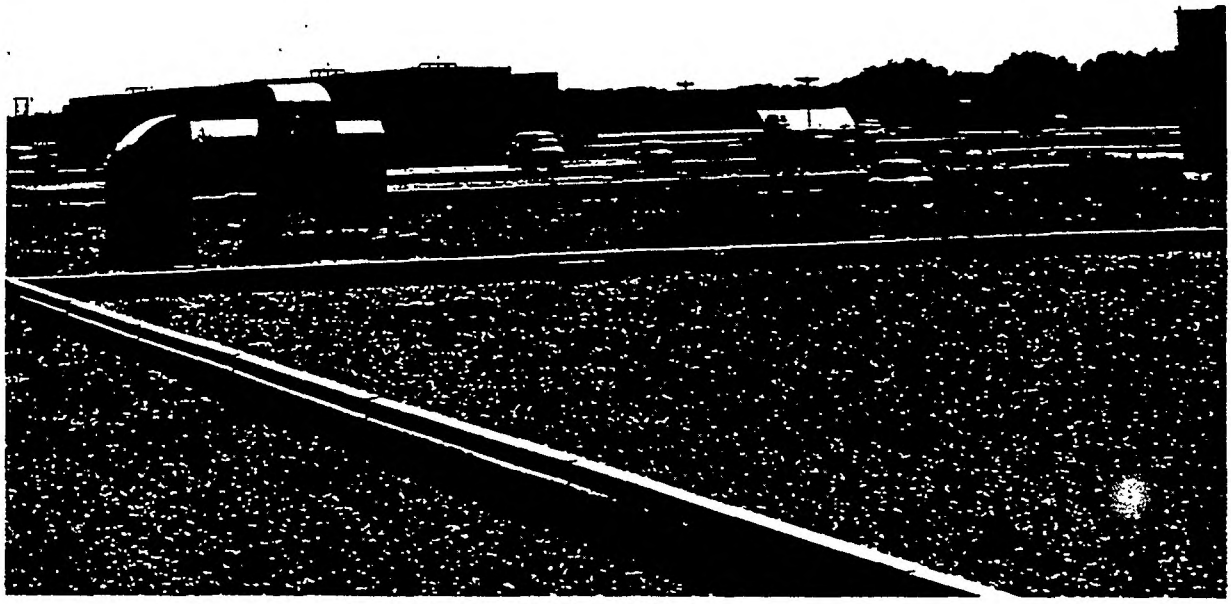

Description

Koppers Coal Tar Bitumen built-up roofing systems consist of alternate layers of Koppers Coal Tar Bitumen and Koppers tarred felt, surfaced with a heavy top pouring of Koppers Coal Tar Bitumen into which is embedded an aggregate.

Koppers Coal Tar Bitumen built-up roofing systems are used whenever a roof is exposed to water and/or corrosion, and on all level or low sloped roofs where minimum maintenance is required.

Features

Coal Tar Bitumen built-up roofing provides one the most durable roofing systems known due to its inherent superior waterproofing and weathering characteristics. This is THE time proven roofing system for level and low sloped roofs.

Coal Tar Bitumen provides numerous advantages to an owner. The superior performance of coal tar roofing systems in the areas listed below make coal tar roofing systems unique in the roofing industry.

1. Coal Tar Bitumen has natural resistance to water, air and water vapor penetration.

A tight molecular structure enables Coal Tar Bitumen to resist water penetration and oxidation of the roof surface.

2. Another unique feature of coal tar roofing is its self-healing ability.

Alligatoring and hairline cracks common to most materials, eventually cause damage to the roofing membrane. Coal Tar Bitumen has a property known as "cold flow" which automatically corrects these conditions before serious damage takes place. This "cold flow" feature heals small mechanical fractures at normal temperatures.

3. Application improvements.

Because Koppers has expertise in the chemistry of aromatic coal tars, Coal Tar Bitumen was developed with the beneficial features of low fume evolution at application temperatures, thus reducing potential irritation during application.

These features represent significant improvements which are in consort with the aims of government, labor, and industry in the areas of reduced air pollution and improved worker conditions.

Uses

1. All 'dead' level roofs
2. All water cooled roofs
3. Low sloped roofs with occasional ponding
4. Low sloped roofs with retarded drainage
5. All buildings with level or low sloped roofs that are built for long service life
6. Roofs in most highly corrosive atmospheres

Slopes

Koppers recommends that the maximum roof slope be one-half (½) inch per foot for all built-up Coal Tar Bitumen roof systems. Koppers does, however, permit slopes up to two (2) inches per foot at flashings that incorporate tapered cants and for short run crickets or saddles for drainage, provided there are provisions for adequate back nailing, and these crickets or saddles do not cover more than 15% of the roof area.

All felts must be back nailed on slopes over one-half (½) inch per foot. For recommendations on roofing procedures for slopes over ½ inch per foot, consult your Koppers representative.

Underwriters Laboratories

The current Underwriters Laboratories Building Materials Directory under the heading "Built-Up Roof Covering Materials" lists Koppers Coal Tar Bitumen and Tarred Felt for use in construction of Class A and B built-up roof coverings.

"Roof Deck Constructions" and "Roof Deck Construction Materials" such as "Foamed Plastic" insulation board are listed under their appropriate headings or under Koppers in the index of Companies.

Guarantees

Koppers Guarantees are available for 5, 10, 15, and 20 year terms. Roof guarantees cover ONLY the built-up roofing and flashing membrane. (Except Gold Seal Guarantee which includes Exeltherm Xtra roof insulation.)

For further details, please refer to Page 6 of this manual.

Note: Due to varying architectural designs, Koppers built-up roofing products should not be used on single family residential construction.

General Requirements and Special Conditions

Roof Structure System

In any building the performance of the Built-Up Roofing will be affected to some degree by all of the parts of the roof structure system as well as the inside and outside atmospheric environment. Each component should be investigated for its compatibility with each of the others. The roof structure system may include any or all of the following:

- Outside Atmospheric Conditions
- Roofing System
- Peripheral Details (Flashings)
- Insulation (if present)
- Vapor Retarder (if present)
- Structural Deck including sub purlins (supports)
- Structural Framing
- Air Space (if present)
- Ceiling (if present)
- Interior Air Conditions

You will find information in this manual pertaining to materials and application methods other than for built-up roofing. They are offered to assist the designer in establishing their normal position in the roof structure system. They should not be construed as part of the built-up roofing system, as endorsement, nor as part of the designated specifications other than to establish a suitable roofing base in the roof structure system.

proper design, specification and positioning of the various components of the roof structure system is the responsibility of the buildng owner or his designer. Any subsequent failures, due to either the installation or lack of installation will not be Koppers responsibility

Decks

The deck is the base over which the built-up roofing, or insulation and built-up roofing is applied. Where the term deck is used in this manual without reference to insulation, it shall designate the surface over which roofing is to be applied. All decks shall be clean, smooth, dry, rigid and free of debris. Any deck defect shall be corrected before applicatin of roofing. All decks shall be installed in accordance with the deck' manufacturer's specifications and shall be in compliance with Koppers General Requirements.

In approving any deck as satisfactory to receive a Koppers roof, only the deck surface is accepted. It is the responsibility of the building designer and the deck manufacturer to provide for expansion and contraction in a manner that will provide a stable base for the roofing; for support of maximum anticipated loads; secure attachments vertically and laterally, and the selection of the deck material and construction details including their ability to contain bitumens.

PPERS WILL NOT ASSUME RE-SPONSIBILITY FOR DECK DEFECTS OR BITUMEN SEEPAGE.)

The placing of conduits, bolt heads, etc., above the roof deck and below the roofing membrane is not recommended.

All projections or openings in the deck should be completed prior to the application of the roofing.

Optimum adhesion to the deck is necessary for good roof performance. Where Koppers Bitumen or steep asphalt is used as an adhesive, questionable decks may be tested for dryness and adhesion by pouring one pint of the bitumen, heated to application temperature, over a representative area or areas of the deck. The deck is not satisfactory if the bitumen foams or bubbles, or upon cooling to ambient temperature may be stripped clean of the deck.

When decks can not be sufficiently cleaned to permit adequate adhesion a primer is required.

Metal Decks

Metal Decks: Decks of this type must be clean, smooth, and properly anchored to the steel purlins and all joints correctly lapped and fastened.

It is absolutely necessary to install board type insulation on a metal deck before the Koppers roofing is applied.

Type of metal deck, flute opening and various other factors determine the type and thickness of insulation required. Consult your Koppers representative for recommendations.

Metal roof decks shall be designed so that they will not have a deflection exceeding 1/240 of clear span under all types of loads (live & dead) when subjected to 300 lbs. concentrated on a 1 sq. ft. area at mid-span. Designer should take into account roof traffic conditions including mechanical equipment used for roof application.

Note: When applying insulation and roofing over a perforated or acoustical type metal deck, it is required that a vapor retarder be installed prior to the application of the insulation or that a base sheet set in steep asphalt be utilized as the first ply of Built-Up Roofing. This is to reduce the possibility of Bitumen drippage.

If two layers of insulation are specified, it's important that the joints in the top layer do not coincide with the joints of the bottom layer.

Note: In areas that exceed the 1/2" per foot maximum slope requirements (short run crickets, saddles or cants), all plies or tarred felt must be back nailed. Wood nailing strips must be provided when the substrate is not considered capable of retaining nails.

Application of Vapor Retarder and Board-Type Insulation (Felt Type Vapor Retarder)

1. Coat the ribs of the metal deck with Steep Asphalt and then install two (2) full thicknesses of Koppers No. 15 Asphalt Felt, lapping each sheet nineteen (19) inches over the preceding sheet, mopping with Steep Asphalt the full width of the nineteen (19) inch lap. Extend and adhere all felt up vertical surfaces to a height 6" above the plane of the insulation surface.

2. Mop the entire surface with a uniform coating of Steep Asphalt, into which, while hot, firmly embed the insulation.

3. Complete the system in accordance with Specification No. 220.

Application of Board-Type Insulation (Without Vapor Retarder)

1. Install insulation with FM approved mechanical fasteners or Steep Asphalt. When attachment is made with steep asphalt it shall be applied to deck at the rate of 12 to 15 lbs. per 100 sq. ft., place insulation while steep asphalt is still molten to provide good adhesion (See "Attachment" Page 10.)

2. Complete the system in accordance with Specification No. 220.

Poured Portland Cement Concrete

The deck surface must be smooth, dry, and free of dirt, dust and debris. Projections should be removed, low points filled with cement grout or other suitable material, and all cracks pointed up. Roof deck shall be properly graded to outlets.

Note: In areas that exceed the 1/2" per foot maximum slope requirement (short run crickets, saddles or cants), all plies of tarred felt must be back nailed. Wood nailing strips must be provided when the substrate is not considered capable of retaining nails.

Application of Vapor Retarder and Board-Type Insulation

1. Apply a uniform coating of Coal Tar Bitumen to the deck.

2. Lay over the entire surface two (2) full thicknesses of Koppers Tarred Felt, lapping each sheet nineteen (19) inches over the preceding sheet — mopping with Coal Tar Bitumen the full nineteen (19) inches so that in no place shall felt touch felt.

3. Extend and adhere all plies of felt to vertical surfaces to a height 6" above the plane of the insulation surface.

4. Apply a uniform coating of Coal Tar Bitumen over the entire surface into which, while hot, embed the insulation. If there are two (2) layers of insulaton mop the entire surface of the first layer with Coal Tar Bitumen into which, while hot, embed the second layer of insulation.

5. Complete the system in accordance with Specification No. 220.

Application of Board-Type Insulation (Without Vapor Retarder)

1. Apply a uniform coating of Coal Tar Bitumen over the entire surface into which, while hot, embed the insulation.

2. Complete the system in accordance with Specification No. 220.

Application of Roof Membrane to Deck (Without Insulation)

Install the roof in accordance with Specification No. 220, mopping directly to the deck.

Precast Structural Concrete Sections

Precast concrete structural sections demand the same recommendations as poured concrete decks, although the presence of moisture, due to insufficient drying time, is not likely. If the contractor finds one or more slabs resting unevenly, with edges projecting above the surface, this should be corrected by resetting or leveling off. Leveling off should be gradual and smooth to permit insulation full contact with the substrate. All insulation joints must be even and smooth. Open-cell aggregate concrete is not acceptable for filling or leveling low areas. **All joints must be grouted, and as well, must be caulked with trowel-graded asphaltic plastic cement. As additional projection from bitumen drippage centered on the joint, an 8 inch wide (min.) felt stripping must be totally embedded in the troweling of plastic cement.** Sides and ends of deck sections should be square, rest firmly and evenly on supporting members, and be installed to prevent lateral and vertical movement.

Note: In areas that exceed the 1/2" per foot maximum slope requirement (short run crickets, saddles or cants), all plies of tarred felt must be back nailed. Wood nailing strips must be provided when the substrate is not considered capable of retaining nails.

...ion of Vapor Retarder and Board-Type Insulation

1. On precast concrete decks, solid mop the entire deck surface with Coal Tar Bitumen.

2. Lay over the entire surface two (2) full thicknesses of Koppers Tarred Felt, lapping each sheet nineteen (19) inches over the preceding sheet — mopping with Coal Tar Bitumen the full nineteen (19) inches so that in no place shall felt touch felt.

3. Extend and adhere all plies of felt up vertical surfaces to a height 6" above the plane of the insulation surface.

4. Apply a uniform coating of Coal Tar Bitumen over the entire surface. While hot, embed the insulation. If there are two (2) layers of insulation mop the entire surface of the first layer with Coal Tar Bitumen. While hot, embed the second layer of insulation.

5. Complete the system in accordance with Specification No. 220.

Application of Board-Type Insulation (Without Vapor Retarder)

1. Over precast concrete, solid mop with Coal Tar Bitumen. While the bitumen is still hot, embed the insulation. See insulation section, Page 11. Insulation joints shall not coincide with joints of the precast units.

2. Complete the system in accordance with Specification No. 220.

...n of Roof Membrane to Deck (...out Insulation)

On precast concrete, solid mop with Coal Tar Bitumen.

2. Complete the system in accordance with Specification No. 220.

Lightweight Decks

Poured Insulation
Gypsum — Poured/Plank

Lightweight insulating decks include lightweight aggregate concrete (20 to 40 lbs. per cu. ft. oven dry density); foamed concrete, gypsum and thermosetting asphaltic decks.

Poured Decks:
Except for Koppers Dycon® Concrete, poured lightweight insulating deck systems must be capable of venting excess water vapor to the underside. Koppers will not accept these poured lightweight insulating decks to be placed over vapor retarders, poured concrete substrates, unvented metals, or any type of base which will not permit these materials to vent from the underside. This is necessary to prevent a water vapor pressure buildup under the built-up roofing. Occasional or spot vents through the roofing as the only venting method is not sufficient.

Provisions should be made wherever possible to provide additional venting such as notched wood perimeter nailers, etc., in conjunction with the venting from the underside of the deck. If board type insulation is to be applied over a lightweight insulating deck, provisions must be made between the fill and the board insulation to prevent fill moisture from affecting the insulation and roofing.

Precast Panels:
On precast gypsum panels, all joints must be grouted, and as well, must be caulked with trowel-grade asphaltic plastic cement. As additional protection from bitumen drippage centered on the joint, an 8 inch wide (min.) felt stripping must be totally embedded in the troweling of plastic cement.

Note: In areas that exceed the 1/2" per foot maximum slope requirement (short run crickets, saddles or cants), all plies of tarred felt must be back nailed. Wood nailing strips must be provided when the substrate is not considered capable of retaining nails.

Application of Vapor Retarded and Board-Type Insulation

1. Apply over entire surface one (1) ply of Koppers coated base sheet, lapping each sheet four (4) inches over preceding sheet and nailing at lap no less than nine (9) inches and stagger nailed down center of each sheet on nine (9) inch centers. (This is approximately 100 nails per 100 sq. ft.).

2. Lay over the entire surface two (2) full thicknesses of Koppers Tarred Felt, lapping each sheet nineteen (19) inches over the preceding sheet — mopping with Coal Tar Bitumen the full nineteen (19) inches so that in no place shall felt touch felt.

3. Extend and adhere all plies to vertical surfaces to a height 6" above the plane of the insulation surface.

4. Mop the entire surface with a uniform coating of Coal Tar Bitumen into which, while hot, firmly embed the insulation.

5. Complete the system in accordance with Specification No. 220.

Application of Board-Type Insulation (Without Vapor Retarder)

1. Apply over entire surface one (1) ply of Koppers coated base sheet, lapping each sheet four (4) inches over preceding sheet and nailing at lap no less than nine (9) inches, and stagger-nailed down the center of each sheet on nine (9) inch centers. (This is approximately 100 nails per 100 sq. ft.).

2. Mop the entire surface with a uniform coating of Coal Tar Bitumen into which, while hot, firmly embed the insulation.

3. Complete the system in accordance with Specification No. 220.

Application of Roof Membrane to Deck (Without Insulation)

1. Apply over entire surface one (1) ply of Koppers coated base sheet, lapping each sheet four (4) inches over preceding sheet and nailing at lap no less than nine (9) inches and stagger nailed down center of each sheet on nine (9) inch centers. (This is approximately 100 nails per 100 sq. ft.).

2. Complete the system in accordance with Specification No. 210.

Thermosetting Asphaltic Fill
When applying the roofing membrane directly over a thermosetting asphaltic fill, follow Specification 210 except the first ply of the roofing membrane must be a base sheet set in a solid mopping of steep asphalt.

Wood Plank/Plywood

Wood shall be well seasoned, dry and preferably treated. End joints shall have adequate bearing. Loose or void knot holes, large cracks, etc., shall be covered with sheet metal.

Lumber shall be a minimum of 1" nominal thickness.

Plywood (exterior grade) shall be a minimum of 1/2" thickness. Hot Coal Tar Bitumen should never be applied directly to a wood deck. Sandwiched between the heat from above and the heat from below, such material finds its way through the boards into the building. Good roofing practice demands the cushioning and blotting effect of a layer of sheathing paper followed by one ply of base sheet nailed to the deck. **Shiplap and square edge boards should be avoided and tongue-and-grooved lumber used where possible.**

Preparation to Deck Surface — (Mandatory on all Wood Decks)

The wood roof deck shall be covered with one (1) layer of approved rosin-sized sheathing paper weighing approximately five (5) pounds per one hundred (100) square feet. The sheathing paper shall be lapped two (2) inches and secured to the deck by occasional nailing.

Note: In areas that exceed the 1/2" per foot maximum slope requirement (short run crickets, saddles or cants), all plies of tarred felt must be back nailed. Wood nailing strips must be provided when the substrate is not considered capable of retaining nails.

Application of Vapor Retarder and Board-Type Insulation

1 Apply over entire surface one (1) ply of ers coated base sheet, lapping each et four (4) inches over preceding sheet and nailing at lap no less than nine (9) inches and stagger nailed down center of each sheet on nine (9) inch centers. (This is approximately 100 nails per 100 sq. ft.).

2. Lay over the entire surface two (2) full thicknesses of Koppers Tarred Felt, lapping each sheet nineteen (19) inches over the preceding sheet — mopping with Coal Tar Bitumen the full nineteen (19) inches so that in no place shall felt touch felt.

3. Mop the entire surface with a uniform coating of Coal Tar Bitumen into which, while hot, firmly embed the insulation.

4. Complete the system in accordance with Specification No. 220.

Application of Board-Type Insulation (Without Vapor Retarder)

1. Apply over entire surface one (1) ply of Koppers coated base sheet, lapping each sheet four (4) inches over preceding sheet and nailing at lap no less than nine (9) inches and stagger nailed down center of each sheet on nine (9) inch centers. (This is approximately 100 nails per 100 sq. ft.).

2. Apply a uniform coating of Coal Tar Bitumen over the entire surface into which, while hot, embed the insulation.

3. Complete the system in accordance with Specification No. 220.

: When the roof insulation is to be nailed a vapor retarder is not required; the one ply of base sheet may be omitted; however, the sheathing paper is required.

Application of Roof Membrane to Deck (Without Insulation)

1. Apply over entire surface one (1) ply of Koppers coated base sheet, lapping each sheet four (4) inches over preceding sheet and nailing at lap no less than nine (9) inches and stagger nailed down center of each sheet on nine (9) inch centers. (This is approximately 100 nails per 100 sq. ft.).

2. Complete the system in accordance with Specification No. 210.

Structural Wood Fiber

All decking must be installed in strict accordance with the particular deck manufacturer's recommendations. Deck material must be protected during shipment, job site storage and prior to roofing application. No planks which have become structurally weakened due to moisture, fractures or mutilated edges may be used. All joints must be level and preferably grouted full and level with plank surfaces as recommended by the deck manufacturer. All planks must be well anchored to supporting members to resist movement in a fashion recommended by the deck manufacturer. Any planks which bow or ect or do not seat securely must be ced. Responsibility for the selection of a particular type of wood fiber deck, its installation, provision for expansion and contraction, its suitability to job requirements, and its ability to support anticipated loads in its environment rests with the designer and deck manufacturer.

All deck joints of these types must be grouted, and as well, must be caulked with Koppers Flashing Cement which shall be applied so that the top surface is level and smooth. Felt stripping four (4) to six (6) inches wide set in a troweling of the cement is required to assist in leveling uneven joints and bridge the joint openings thus providing a better surface for the roofing materials.

Caution: care must be taken to avoid bitumen drippage.

Note: In areas that exceed the 1/2" per foot maximum slope requirement (short run crickets, saddles or cants), all plies of tarred felt must be back nailed. Wood nailing strips must be provided when the substrate is not considered capable of retaining nails.

Applications of Vapor Retarder and Board-Type Insulation

1. Install two (2) plies of No. 15 asphalt felt lapped nineteen (19) inches in Type III steep asphalt. Plies shall be mopped solidly so that in no place shall felt touch felt.

2. Mop the entire surface with a uniform coating of Type III steep asphalt into which, while hot, embed the insulation.

3. Complete the system in accordance with Specification No. 220.

Application of Board-Type Insulation (Without Vapor Retarder)

1. Mop the entire surface with a uniform coating of Type III steep asphalt into which, while hot, embed the insulation.

2. Install roofing in accordance with Specification No. 220 except that a base sheet, set in steep asphalt, must be substituted as the first ply. See "Base Sheet Alternate" Page 12.

Application of Roof Membrane to Deck (Without Insulation)

1. Install roof membrane directly to deck in accordance with Specification No. 220 except that a base sheet, set in Type III steep asphalt, must be substituted as the first ply. See "Base Sheet Alternate" Page 12.

Material Protection

It is the responsibility of the roofing contractor to protect all roll roofing materials and roof insulation from ground or construction moisture and weather before and during construction of the roof membrane.

Roof insulation boards are often shipped from the manufacturing plant with plastic sheets wrapped around the boards securing them on the pallets. These are generally not acceptable for job site protection as they do not "breathe" and therefore can trap moisture. Removing these plastic shipping protection sheets and replacing them with "breathable" type tarpaulins such as canvas is recommended.

Attachment

Maximum adhesion or secure attachment of all components in the roofing assembly is necessary for satisfactory long term performance of the roofing membrane. Bitumen adhesive and/or fastener quantities specified by the manufacturer must be capable of passing a minimum uplift resistance of 40 pounds per square foot (psf).

When Building Code requirements dictate a higher uplift resistance than our minimum requirement, additional fasteners or adhesive will be required over and above the quantities described in the ensuing specifications

When asphalts are to be used to adhere insulations to concrete decks, the deck shall first be primed with an asphalt primer at a rate of one gallon per 100 square feet.

When nails or fasteners are used, they must be nailed through disks or have sufficiently large heads to prevent fracture or puncture through the roofing felts.

Mechanical fastening of insulation is the preferred method of attachment. Beginning in 1984, Factory Mutual has announced that mechanical fastening of the first layer of board type insulation to a metal deck will be the only acceptable method for attachment.

Contact the insulation manufacturers' literature for requirements.

Cold applied adhesives are not acceptable for attaching insulation or vapor retarders.

Koppers will not be responsible for any damage caused by or the result of unsatisfactory attachment.

For further information contact your Koppers representative.

Expansion Joints (Building)

Since all materials expand and contract due to temperature and/or moisture, the use, location, and design of building expansion joints, especially in the roof structure system, should be taken into consideration at the time of original building design.

Although provisions for adequate expansion joints are the responsibility of the building designer, Koppers offers the following recommendations for the protection of the roofing system against splits caused by expansion and contraction of the building. Building expansion joints should be installed.

1. On roof areas larger than 200 feet in each direction

2. At all places where the structural supports and roof assembly change direction

3. Where type of adjoining deck materials change

Where control or expansion-contraction joints are provided in the structural steel, deck material, or deck system, provisions must be made for continuation of this relief through the built-up roofing system. Koppers realizes that in a climate controlled building there may be little or no expansion AFTER the building is in use, however, building expansion joints are still recommended based upon the following points:

1. During construction the building will not be under a steady state temperature/humidity condition so that thermal and moisture movement can be sufficient to fracture the roofing.

2. If no building expansion joint is provided, the owner must keep the building at the steady state temperature and humidity condition at all times, as holiday shut-downs can fracture the roofing due to the movement of the roof system resulting from temperature/humidity variation.

3. If the occupancy is fairly large, the sudden entrance on a rainy day of many rain-soaked [illegible] may cause moisture movement in [illegible] structure system which can fracture the roofing.

Water Stops (Temporary Protection)

Water stops consisting of two (2) plies of tarred felt and mopping of Coal Tar Bitumen extending onto the deck and insulation at least 6" and 4", shall be applied at the end of each day's work over exposed edges of insulation. **These temporary protective measures must be removed cleanly from the insulation (top surface and vertical joint) and from the deck to ensure tight insulation joints and level insulation surfaces. Improperly removed water stops have been determined as a cause of roof splits and have prevented moisture vapor movement to vented edge details.**

Cut Offs (Permanent Installation)

Venting of roof insulation at walls, curbs, eaves, etc. is recommended for all but a few special roof structures. Therefore, cut-offs should not be installed at edges of insulation adjoining these areas for venting purposes.

Cut-offs may be installed however, provided they are constructed to run in one direction continuously to vented edges and provided no section of the roofing is isolated or blocked from venting.

Vapor Retarders

Vapor retarders are normally used where the heat flow direction and/or humidity within the building, during any climate or occupancy cycle, might cause the dew point or condensation to occur under the built-up roofing within the insulation chamber. It is important that the vapor retarder, when installed, provide a continuous seal, (including ventilators, skylights, peripheral walls, and other terminations) from the source of the water vapor.

Insulation

Insulations come in varying thicknesses and sizes. Should the manner of attachment as suggested conflict with that specified by the individual insulation manufacturer, the insulation manufacturers specifications shall be followed and in addition, shall be in compliance with Koppers General Requirements.

Good roofing practice dictates that the following points be considered when specifying board type roof insulation.

1. The roofing insulation must be kept dry at all times. It must be of a type approved by Koppers for use with a Koppers built-up roof. It should only be applied over a deck complying with all of Koppers General Requirements.

2. If the roof deck slope is one-half (½) inch per [illegible] or more, the insulation must be able to retain nails or wood nailers must be installed perpendicular to the slope at each course of insulation.

Spacing of nailers must be such that the insulation fits snugly with the nailers but must not be force fitted.

3. No more insulation shall be laid at any one time than can be protected by bitumen and felt in case of sudden weather changes.

4. Edges of insulation shall be brought closely together and shall not be forced into place. Where insulation joins vertical surfaces, the insulation shall be cut in a neat manner allowing approximately one-half (½) inch clearance.

5. When more than one (1) layer of insulation is used, joints in each layer shall not coincide. All layers shall be parallel to preceding layers.

Note: When urethane, urethane composite or isocyanurate roof insulation is specified, it must be installed in a double layer application. The appropriate insulation product must be installed direct to the roof deck and a second layer of fiberboard, perlite board or glass fiber roof insulation installed over top. The joints of the second layer must not correspond with that of the first. In lieu of the second layer of insulation, a Koppers vented base sheet may be used as the first ply of the membrane. Consult the manufacturers' literature for specific information.

Wood Nailing Strips

All non-nailable decks require wood nailing strips at eaves, edges, walls, roof-openings, etc. for proper securement of metal flanges. Nailers must be securely and firmly attached to the deck or through to its supporting members. Nailers shall extend not less than 1" beyond the apron or flange.

Roofing felts for all deck areas having a slope of ½" per foot or more must be back nailed and therefore non-nailable decks must be furnished with treated wood nailing strips treated with a material compatible with bituminous roofing.

Cold Storage and Freezer Buildings

Koppers will not bond its built-up roofing over these structures if insulation or insulation and vapor retarder is installed over the deck unless there is an adequately ventilated air space between the deck and insulated refrigerated area.

For procedures on non-guaranteed built-up roofing applications, consult a Koppers representative. When a guaranteed system is required, refer to KMM Specifications, Page 24.

Water Retaining and Retarded Drainage

When the roofing system is subjected to common standing water or retarded drainage refer to the Special Applications Section, Page 15.

Temporary Roofing

Temporary roofing specifications are available for all Koppers Coal Tar Bitumen Built-Up Roofing Systems. Consult your Koppers representative for recommended specifications over various type decks for temporary roof construction.

Reroofing Design Considerations:

During the reroof design and specification phase, and prior to commencement of reroofing work, it is the building owner's responsibility to have his architectural or consulting representative ascertain if the existing roof structure, with the new roof system installed, will meet all local building structural codes.

If additional insulation is to be a part of the new roof system, an evaluation of the dew point and its effect on the roofing system should be determined.

Reroofing application can be complicated since many factors must be considered. For more specific information pertaining to special situations, contact your Koppers representative.

Note: Koppers will not be responsible for any damage caused by excess loads on structural systems or damage due to rate or change in location of new dew point.

General Application Procedure

Application of Bitumens
Recommended Weights per 100 sq. ft. (for estimating purposes only)

	Average Interply	Top Coating
Koppers Coal Tar Bitumen	25 lbs.	75 lbs.
Steep Asphalt	23 lbs.	60 lbs.

Average interply weights are based on many years of experience of good roofing practice, and take into account a reasonable variation in the amount of bitumen absorbed in different substrates, and the type of specification. Moppings of bitumen between felts shall be continuous.

Felt Shall Not Touch Felt
It is generally agreed that maximum strength between layers of felt is achieved by the thinnest practical glue line of bitumen. Too thin a layer starves the lap, whereas an excessive layer can permit interply movement on sloped roofs.

Care should be taken by all parties to provide thin but continuous moppings of interply bitumen. Too heavy of interply moppings can result in felt slippage.

Flood Coat
The top pouring is most important, it must be thorough and uniformly covered with specification aggregate embedded into the bitumen while the bitumen is still hot.

Recommended Temperature Limitations:

	Maximum Kettle Temp.	Point of Application Temp.
Koppers Coal Tar Bitumen	425° F	350-400° F
Steep Asphalt	475° F	400-450° F

Use manufacturers recommended "EVT" Temperature when listed

When roofing bitumens are excessively overheated and/or held for long periods of time, their waterproofing qualities are greatly reduced, and at the same time the volume of fuming is increased. In order to achieve the maximum benefits of low fuming and unequaled waterproofing performance, it is imperative that Koppers Coal Tar Bitumen be heated within the temperature limitations listed above. Close supervision of heating is also good roofing practice for all bitumens.

If heat is desired during a holding period at the jobsite while material is not being drawn off and replenished as under normal usage, kettle temperature should be reduced and not permitted to exceed 350°F for Koppers Coal Tar Bitumen or 425°F for steep asphalt. The kettle should be full lid closed. These temperatures are applicable to job conditions and do not apply to holding or storage in kettles in excess of 4 hours. If bitumen is not to be used for periods over 4 hours, the kettle should be shut off.

Koppers Coal Tar Bitumen may be contained in 1000 gal. or greater capacity heated and automatically controlled closed vessel tankers at 375°F for periods not exceeding 96 hours.

Application of Felt
Plies of felt must be laid shingle fashion. Where a water flow direction exists, felts should be applied so that the direction of flow is not against the laps. Broom or press all plies of felt into the hot bitumen and lay without wrinkles, buckles or kinks, so that the finished roof is free of pockets or blisters. Each felt ply shall be completely covered with a complete mopping of bitumen.

The number of plies are controlled by varying widths of the edge laps. Four-ply (4) roofing, for example, is achieved by lapping each ply approximately twenty-seven and one-half (27½) inches.

Koppers felts are marked at the factory with lap lines for this purpose. Except as specifically provided for in Koppers specifications, application of felt lapping methods other than shingle fashion will not be permitted.

When beginning a membrane roofing installation, appropriate width starting strips of felt shall be used at the starting point to achieve the specification ply build-up at that point so that successive felt applications will produce the ply requirements. Overlap ends of all connecting plies of felt (end laps) not less than 10 inches. End stripping or taping of these laps is not permitted.

Application of Koppers Bitumen and Aggregate Surface
The final application of Koppers Roofing is a triple weight application of Koppers Coal Tar Bitumen (approximately 75 lbs./sq.) into which is distributed an approved aggregate while the Bitumen is still hot.

Benefits of aggregate surfacing
1. Protection from foot traffic of other trades during construction and afterwards for routine roof maintenance.
2. Weight as additional protection for wind uplift.
3. Reduced surface temperature.
4. Even flow of water to the drains.
5. Fire protection from burning brands.
6. Protect bitumen from the actinic rays of the sun.
7. **Most important** — by using an aggregate surface, an additional 75 lb./sq. of Coal Tar Bitumen (the waterproofing agent) is included in the installation.

The application of Koppers Coal Tar Bitumen and aggregate must be done at the time the felts are applied; except in periods of hot, dry weather, when morning dew is not expected, the top surfacing may be delayed overnight.

When the specifier desires glaze coating and/or all work to be completed the same working day, he shall be responsible to so state this requirement in his specifications.

The aggregate surfacing must be applied into the top pouring while the bitumen is still hot so that a uniform layer will be embedded and adhered. The completed roof assembly will have a uniform aggregate surface. Depending on slag weights in certain parts of the country 400 lbs. of slag per square may be required. Occasionally on well applied roofs, small black globes known as "raspberries" or "blackberries" will form in the roof surface. These are not detrimental to the roof.

Aggregate Surfacing
The aggregate to be used should meet the ASTM Specification D1863-80. The basic requirements for this aggregate are as follows:

Gradation Requirements

Sieve	Amounts Finer than Sieve Specified, mass %	
	Size No. 67 19.0 to 4.75-mm (¾-in. to No. 4)	Size No. 7 12.5 to 4.75-mm (½-in. to No. 4)
25 mm (1 in.)	100	...
19 mm (¾ in.)	90 to 100	100
12.5 mm (½ in.)	...	90 to 100
9.5 mm (⅜ in.)	20 to 55	40 to 70
4.75 mm (No. 4)	0 to 10	0 to 15
2.36 mm (No. 8)	0 to 5	0 to 5

Size number and requirements data are from Specification C 33 and D 448.

Physical Properties

Moisture, max, %:	
Crushed stone and gravel	2.0
Crushed roofing slag	5.0
Unit mass (loose), min, kg/m³ (lb/ft³)	960 (60)
Dust, max, %	2.0
Hardness, max, percentage passing a 3.35-mm (No. 6) sieve	20

A higher moisture content is permitted for slag because of moisture entrapment in the internal pores of the pieces of slag.

Cold Weather Application
When roofing is applied at temperatures below 45°F, special precautions must be taken to insure the satisfactory performance of the finished roof. Before applying roofing, moisture, ice, snow, surface water, etc., must be removed from the deck.

Hot applied bitumens tend to congeal rapidly in cold weather. Extra care must be taken to set insulation or roofing as quickly as possible while the bitumen is still hot.

When temperature is below 45°F., felt must be embedded in bitumen while it is still hot and **broomed-in immediately** with solid pressure to ensure necessary embedment into bitumen.

Do not heat bitumens above the maximum temperature limit listed above to compensate for rapid chilling. Insulated containers along with carefully timed material delivery methods, must be employed.

Note: Bitumen temperatures below those recommended at the "point of application" can result in heavy interply quantities which in turn can potentially contribute to the cause of membrane slippage.

Base Sheet Alternate
When substituted for the first ply in a solid mop application specification, the Base Sheet shall be embedded in a solid mopping of Koppers Steep Asphalt followed by thorough brooming to eliminate air pockets, wrinkles, fish mouths, buckles, etc. The remaining three (3) plies of tarred felt shall be solidly mopped with Coal Tar Bitumen in accordance with the specification.

When rosin sized or sheathing paper is a part of the original specification it shall remain and be applied beneath the Base Sheet. Edge laps shall be 4" and end laps shall be 6". The nailing pattern for the Base Sheet shall be 9" on center through the lap and 2" from the edge lap and stagger-nailed down the center of each sheet on 9" centers. (Note: This is approximately 100 nails per square.)

After applying a base sheet as the first ply on the four (4) ply roofing membrane, three (3) additional plies must be installed at once.

When applying the additional three (3) plies of tarred felt, lap each ply shingle fashion 24-2/3 inches. Each ply must be solidly mopped with Coal Tar Bitumen.

When specifying the Base Sheet alternate, use the designation **BS** as a subscript to the specification number, **210 BS** (structural wood fiber deck).

Note: If Koppers Asphalt Coated Base Sheet (ASTM D-2626) is substituted for the first ply of the Coal Tar Bitumen roofing specifications, it must not be left exposed or used as a work surface or temporary roof prior to roof completion. Good roofing practice dictates that the total roofing membrane be completed the same day.



Koppers Tarred Felt Systems

Specification No. 210

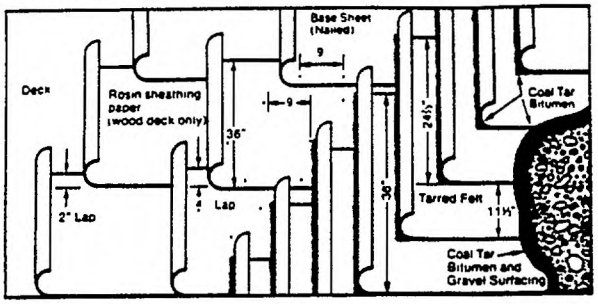

Materials Required per 100 sq. ft of roof area (for estimating purposes)

Rosin Sheathing Paper * (1 ply)	5 lbs.	5 lbs.
Coated Base Sheet ** (1 ply)	43 lbs.	43 lbs.
Tarred Felt (Mopped in Bitumen) (3 plies)	45 lbs.	45 lbs.
Roofing Bitumen (3 moppings @ 25 lbs. each)	75 lbs.	75 lbs.
Top Pour Coat	75 lbs.	75 lbs.
Surfacing: Slag	300 lbs.	—
Gravel	—	400 lbs.
Approximate Total Weight	543 lbs.	643 lbs.

*Wood Decks only.
**Unless otherwise indicated.

Nailable decks without insulation:

Plywood, wood plank, lightweight insulating concrete, poured and precast gypsum

Slope requirements:

¼" per foot maximum.

Procedure

1. General Requirements on Pages 8 through 12 and Flashing Detail Specifications on Pages 16 through 20 are a part of this specification and must be adhered to where applicable.

2. When a vapor retarder and/or roof insulation are required, install in accordance with the manufacturer's instructions and comply with Koppers General Requirements and Special Conditions. Follow Specification No. 220 for roofing materials applied to insulation.

Application of roofing direct to roof deck:

1. (Wood decks only) Over the surface of the roof deck install one layer Rosin Sheathing Paper weighing approximately 5 lbs. per 100 sq. ft. Lap each sheet at least two (2) inches and nail sufficiently to hold in place.

2. Apply over entire surface one (1) ply of Koppers coated base sheet, lapping each sheet four (4) inches over preceding sheet and nailing at lap no less than nine (9) inches and stagger nailed down center of each sheet on nine (9) inch centers.

Note: (This is approximately 100 nails per 100 sq. ft.) Nail shanks are to be of required length for maximum holding power.

3. Over the entire roof area, apply three (3) plies of Koppers Tarred Felt lapping plies twenty-four and two-thirds (24-2/3) inches. All laps shall be mopped with Coal Tar Bitumen the full twenty-four and two-thirds (24-2/3) inches, so that in no place shall felt touch felt.

4. On short run slopes, such as on crickets and saddles, one-half inch per foot or more, nail each sheet of felt six (6) inches from the back edge on twenty-four (24) inch centers.

5. Pour over the entire surface of the roofing membrane, a uniform coating of Coal Tar Bitumen, and, while hot, embed not less than four hundred (400) pounds of gravel or three hundred (300) pounds of slag for each one hundred (100) square feet.

Specification No. 220

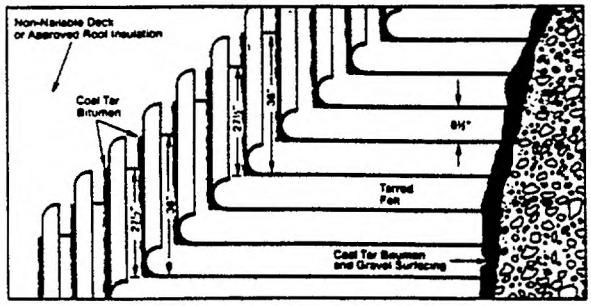

Materials Required per 100 sq. ft. of roof area (for estimating purposes)

Rosin Sheathing Paper * (1 ply)	5 lbs.	5 lbs.
Coated Base Sheet ** (1 ply)	43 lbs.	43 lbs.
Tarred Felt (Mopped in Bitumen) (3 plies)	45 lbs.	45 lbs.
Roofing Bitumen (3 moppings @ 25 lbs. each)	75 lbs.	75 lbs.
Top Pour Coat	75 lbs.	75 lbs.
Surfacing: Slag	300 lbs.	—
Gravel	—	400 lbs.
Approximate Total Weight	543 lbs.	643 lbs.

*Wood Decks only.
**Unless otherwise indicated.

Non-nailable decks

Precast Concrete, Poured Concrete, Structural Wood Fiber*.

Roof insulations:

Various Decks.

Slope requirements:

¼" per foot maximum.

Procedure

General Requirements on Pages 8 though 12 and Detail Specifications on Pages 16 through 20 are a part of this specification and must be adhered to where applicable.

When a vapor retarder and/or roof insulation are required, install in accordance with the manufacturer's instructions and comply with Koppers General Requirements and Special Conditions.*

1. Mop deck (or insulation — as applicable) completely with Coal Tar Bitumen.

2. Apply over the entire surface four (4) plies of Koppers Tarred Felt, lapping plies twenty-seven and one-half (27½) inches. Mop solidly between each 27½ inch lap with Coal Tar Bitumen so that in no place shall felt touch felt.

3. On short run slopes of one-half (½) inch per foot or more, such as on crickets and saddles, and when the deck permits nailing, nail along back of upper edge of each sheet on twenty-four (24) inch centers. Where deck does not permit nailing, nailing strips are required and each sheet must be nailed along back or upper edge at spacings to assure penetration of nailers.

4. Pour over the entire surface of the roofing membrane a uniform coating of Coal Tar Bitumen, and, while hot, embed not less than four hundred (400) pounds of gravel or three hundred (300) pounds of slag for each one hundred (100) square feet.

***NOTE: On structural wood fiber decks, the first ply must be a Koppers coated base sheet set in a solid mopping of steep asphalt (see structural wood fiber, page 16).**

Koppers Glass Fiber Felt Systems

General Information

...ing with its coal tar and tarred felt roof systems, Koppers offers built-up roof membranes ...ing Coal Tar Bitumen and Glass Fiber Felt. These systems offer the superior ...erproofing characteristics of Coal Tar and the unique features of Glass Fiber Felts. This combination of coal tar bitumen and glass fiber felt has demonstrated outstanding roof membrane performance in the most demanding climate conditions.

The General Requirements published on Pages 8 through 12 and Detail Specifications on Pages 16 through 20 of this manual are a part of this specification and must be adhered to where applicable.

Application of Vapor Retarder and Insulation
When a vapor retarder and/or roof insulation are required, install in accordance with the manufacturer's instructions and comply with Koppers General Requirements and Special Conditions.

Product Guide

Coal Tar Bitumen
Coal Tar based roofing and waterproofing bitumen

ASTM Spec. D-450-78 Type III

Glass Felt
Koppers glass fiber roofing felt is an exceptional quality inorganic ply sheet impregnated with a bituminous resin coating compatible with coal tar bitumen.

Specification: ASTM D-2178 Type IV

Specification No. 310-3

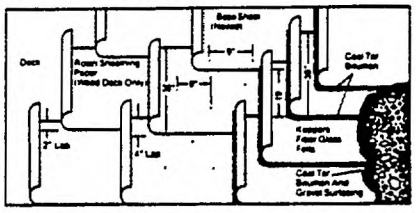

Nailable decks without insulation:
Plywood, wood plank, lightweight insulating concrete, poured and precast gypsum.

Slope requirements:
¼" per foot maximum.

Materials Required per 100 sq. ft. of roof area (for estimating purposes)

Rosin Sheathing Paper (Wood Decks Only)		1 ply
Coated Base Sheet (Nailed)		1 ply
Glass Felts		3 plies
Roofing Bitumen (3 Moppings @ 25 lbs. each)		75 lbs
Top Pour Coat		75 lbs.
Surfacing	Slag	300 lbs.
	Gravel	400 lbs

Application of Roofing Materials to Deck

1. Over the surface of the roof deck install one layer Rosin Sheathing Paper weighing approximately 5 lbs. per 100 sq. ft. Lap each sheet at least two (2) inches and nail sufficiently to hold in place. (Wood decks only.)

Apply over entire surface one (1) ply of Koppers coated base sheet, lapping each sheet four (4) inches over the preceding sheet, nailing at the lap on nine (9) inch centers and stagger nail down the center of each sheet on nine (9) inch centers.

3. Apply over the entire surface three (3) plies of Koppers **Glass Felt**, lapping plies twenty-four and two-thirds (24-2/3) inches. Mop solidly between each 24-2/3 inch lap with Coal Tar Bitumen so that in no place shall felt touch felt.

4. At all areas requiring membrane edge enveloping, a standard organic tarred felt must be used as the enveloping membrane.

5. Pour over the entire surface of the roofing membrane, a uniform coating of Coal Tar Bitumen, and, while hot, embed not less than four hundred (400) pounds of gravel or three hundred (300) pounds of slag for each one hundred (100) square feet.

Specification No. 310-4

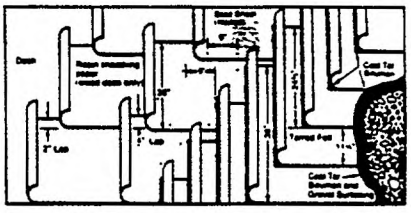

Materials Required per 100 sq. ft. of roof area (for estimating purposes)

Rosin Sheathing Paper (Wood Decks Only)		1 ply
Coated Base Sheet (Nailed)		1 ply
Glass Felts		2 plies
Roofing Bitumen (2 Moppings @ 25 lbs. each)		50 lbs
Top Pour Coat		75 lbs.
Surfacing:	Slag	300 lbs.
	Gravel	400 lbs.

Application of Roofing Materials to Deck

1. Over the surface of the roof deck install one layer Rosin Sheathing Paper weighing approximately 5 lbs. per 100 sq. ft. Lap each sheet at least two (2) inches and nail sufficiently to hold in place. (Wood decks only.)

2. Apply over entire surface one (1) ply of Koppers coated base sheet, lapping each sheet four (4) inches over the preceding sheet, nailing at the lap on nine (9) inch centers and stagger nail down the center of each sheet on nine (9) inch centers.

3. Apply over the entire surface two (2) plies of Koppers Glass Felt, lapping plies nineteen (19) inches. Mop solidly between each nineteen inch lap with Coal Tar Bitumen so that in no place shall felt touch felt.

4. At all areas requiring membrane edge enveloping, a standard organic tarred felt must be used as the enveloping membrane.

5. Pour over the entire surface of the roofing membrane, a uniform coating of Coal Tar Bitumen, and, while hot, embed not less than four hundred (400) pounds of gravel or three hundred (300) pounds of slag for each one hundred (100) square feet.

Specification No. 320-3

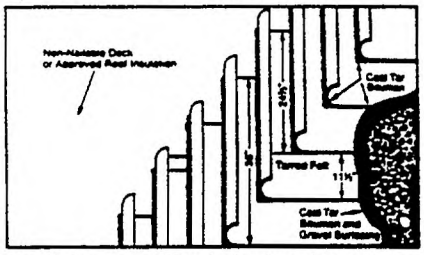

Non-nailable decks:
Poured Concrete.

Roof Insulations:
Various Decks.

Slope requirements:
¼" per foot maximum.

Materials Required per 100 sq. ft. of roof area (for estimating purposes)

Glass Felts (Mopped in Bitumen)		3 plies
Roofing Bitumen (3 Moppings @ 25 lbs. each)		75 lbs.
Top Pour Coat		75 lbs.
Surfacing:	Slag	300 lbs.
	Gravel	400 lbs.

Application of Membrane

1. Mop deck (or insulation — as applicable) completely with Coal Tar Bitumen.

2. Over the entire roof area, apply three (3) plies of Koppers Glass Felt lapping plies twenty-four and two-thirds (24-2/3) inches. All laps shall be mopped with Coal Tar Bitumen the full twenty-four and two-thirds (24-2/3) inches, so that in no place shall felt touch felt.

3. At all areas requiring membrane edge enveloping, a standard organic tarred felt must be used as the enveloping membrane.

4. Pour over the entire surface of the roofing membrane, a uniform coating of Coal Tar Bitumen, and, while hot, embed not less than four hundred (400) pounds of gravel or three hundred (300) pounds of slag for each one hundred (100) square feet.

Specification No. 320-4

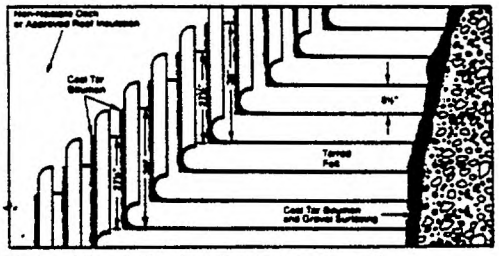

Materials Required per 100 sq. ft. of roof area (for estimating purposes)

Glass Felt (Mopped in Bitumen)		4 plies
Roofing Bitumen (4 Moppings @ 25 lbs. each)		100 lbs.
Top Pour Coat		75 lbs.
Surfacing:	Slag	300 lbs.
	Gravel	400 lbs.

Application of Membrane

1. Mop deck (or insulation — as applicable) completely with Coal Tar Bitumen.

2. Over the entire roof area, apply four (4) plies of Koppers Glass Felt lapping plies twenty-seven and one-half (27-1/2) inches. All laps shall be mopped with Coal Tar Bitumen the full twenty-seven and one-half (27-1/2) inches, so that in no place shall felt touch felt.

3. At all areas requiring membrane edge enveloping, a standard organic tarred felt must be used as the enveloping membrane.

4. Pour over the entire surface of the roofing membrane, a uniform coating of Coal Tar Bitumen, and, while hot, embed not less than four hundred (400) pounds of gravel or three hundred (300) pounds of slag for each one hundred (100) square feet.

Water Retaining Roofs



Water Cooled Roofs

- Spray Systems
- Ponded Systems

Water Retaining Roofs

- Process Water

Retarded Drainage Systems

- Controlled Flow

Discussion

Due to Coal Tar Bitumen's natural resistance to water, it may be utilized in the construction of built-up roofing membranes that will be expected to hold water over long periods of time. When applying a membrane that is required to hold water, follow Specification 220 for applications over non-nailable decks (four plies of No. 15 Tarred Felt set in solid moppings of Coal Tar Bitumen).

Note: The base sheet alternate shall not be used.

ən the roof is water cooled or has been igned to be continuously wet the top surfacing of bitumen and gravel must be applied as follows:

1. Pour over the entire surface of the roofing membrane a uniform coating of Coal Tar Bitumen. While hot, embed not less than four hundred (400) pounds of gravel or three hundred (300) pounds of slag for each one hundred (100) square feet.

2. All loose gravel or slag shall be swept from surface and a second uniform pouring of approximately eighty-five (85) pounds of Coal Tar Bitumen shall be applied over the gravel or slag, into which while hot, shall be applied a second layer of three hundred (300) pounds of gravel or two hundred (200) pounds of slag for each 100 square feet. The entire surface shall then be thoroughly broomed free from all loose gravel or slag. It is advisable to roll the finished surface with a light roller so that aggregate is thoroughly embedded.

3. All flashings will be KMM membrane similar to Specification No. 710 on Page 90 except that a layer of Standard Grade KMM membrane must be installed totally substrate fused prior to the application of the KMM Aluminum membrane top ply.

NOTE: Roofs equipped with controlled flow drainage systems do not require the extra top pour and gravel application.

Design consideration

When designing a water cooled, water retaining or retarded drainage roof assembly, certain design criterion must be considered.

Note:
1. Due to the extremely heavy weight loads normally associated with retained water, poured and precast concrete or other heavy load bearing decks must be specified. Wood or metal decks should only be considered where ponded or standing water is at a minimum.

Note: Decks requiring a base sheet as the first ply of the roofing system are not permitted for this application.

2. Roof Structure design live loads for this application shall be a minimum of 50 psf and deflection shall not exceed 1/360 of the span, both in addition to the anticipated weight of the water. Insulation joints must be taped in single layer applications. Vapor retarders must be two ply and solid mopped. Use steep asphalt over metal decks. Wood must be treated to prevent warping (see "wood nailing strips").

3. At points where water pressure from a spray system may be excessive, the roof surface should be protected with treated board platforms or other suitable construction to break force of the water. These platforms should be laid on top of the roof surface and not fastened to the deck.

4. Insulation under a Water Cooled Roof should be a type which is rigid, dimensionally stable with high compressive strength.

5. IT IS MANDATORY THAT THE WATER COOLING SYSTEM BE CLOSED DOWN AND THE ROOF DRAINED PRIOR TO COLD WEATHER. Neither roofing nor the structure will withstand the expansion caused by ice formation.

Flashing Specifications

General

Flashings are the terminal closures of a roofing system which perform a waterproofing, and in some systems, a decorative function. Flashings must be installed at all intersections formed by vertical surfaces. Their importance cannot be stressed too strongly. Water entering the roofing system through flashings can result in water vapor forces which will destroy the effectiveness of the roofing.

Koppers flashings are an integral part of a Koppers roof. Designed for flexibility so that slight movements do not dislodge them and fastened securely to the wall, they give many years of service.

It is particularly important that the top edge of the flashing be protected by counter flashing, which will insure a diversion of the water away from any opening which might develop between flashing and wall.

NOTE: *In any case where* the design or anchoring system of metal counter flashing is difficult, the top of the flashing system should be stripped with Koppers KMM Aluminum Membrane (8" wide min.) centered and totally heat fused over the top edge of the flashing system.

Metal work is only useful for decorative, water shedding, or protection against mechanical damage, and is not a waterproofing part of the flashing system. Because of the high coefficient of expansion of sheet metals and the large temperature changes experienced on a roof, sheet metal or exposed metal components must be isolated from the waterproofing components of the roofing and flashing system as efficiently as possible to prevent the metal from splitting the membrane.

Flashing should be installed as roofing progresses to prevent water damage to insulation or deck under the roofing. If this is not possible water cut-offs must be installed and later removed when flashing is installed. Metal counter flashing or a top seal of KMM Aluminum Membrane must be installed as flashing progresses.

The basic Koppers flashings require a metal cap flashing to be inserted in the raggle immediately upon completion of base flashing. The cap flashing is to have not less than a four (4) inch exposed apron extending down over the base flashing.

NOTE:
1. If guaranteed flashing is required, it must be installed in conjunction with a Koppers guaranteed roof and can be guaranteed for standard periods up to but not greater than the period for which the roofing is guaranteed. **To be guaranteed, composition flashings must be set at least 7½" above the roofing base.**

2. Metal Cap flashings are not included under any flashing guarantee.

3. Metal work of any description used as flashing or a part of a flashing system is not included under any flashing guarantee.

NOTE: Koppers KMM Flashing Systems are also available for use with Koppers Built-Up Roofing Systems. Specific details, and specifications can be found on Pages 30 and 31 of this manual.

Application

Extend plies of roofing felts and bitumen moppings up all walls, parapets and curbs for a ance of two (2) inches above cant strip.

raggle not less than seven and one-half (7½) inches or more than twelve (12) inches above the roof deck is to be provided.

1. *Prime all masonry walls from top of roofing* felts to raggle with Koppers Asphalt Primer. Allow to dry thoroughly.

2. In a uniform coating of Koppers Flashing Cement,* install one (1) ply of Koppers Glass Fiber Felt extending from the raggle to not less than four (4) inches from the base of the cant onto the roof.

3. On top of this apply a second uniform coat of Koppers Flashing Cement into which embed one (1) ply of Koppers Reinforced Base Flashing (reinforced fabric side down).

Care shall be taken to assure that all flashing membrane end laps are fully embedded in flashing cement. Firmly trowel all end laps in place to assure good adhesion.

4. Nail with one and one-half (1½) inch masonry roofing nails through flat tin discs along upper edge eight (8) inches o.c. maximum into mortar joints. For concrete construction, nail to treated wood nailing strips set in flush with the surface with appropriate nail through flat tin discs.

End laps for each ply shall be not less than three (3) inches. End laps between plies shall be staggered not less than twenty-four (24) inches.

5. The top edge of the flashing felts are to be led with flashing cement. (Stripping of this edge with Koppers Glasfab Fabric, set in the cement is preferred, but remains optional.)

6. Coat entire surface of flashing with Koppers Aluminum Coating #445 applied at a rate of 2 gal/100 sq. ft. (including nail caps along top edge of flashing as well as top edges of felts).

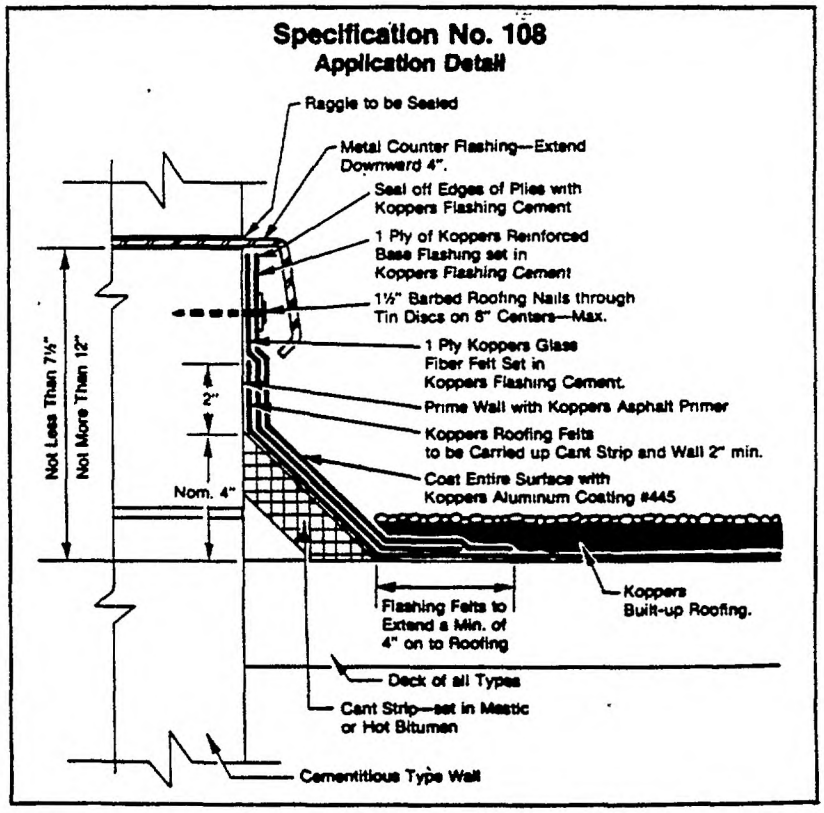

7. Interply cement shall be troweled uniformly, full height and continuously approximately one-eighth (⅛) inch thick. Plies must be laid in smoothly with no pockets, wrinkles or buckles.

Install metal cap flashing.

***NOTE: Koppers steep asphalt may be used as an alternate to the two (2) interply troweilngs of asphaltic plastic cement.**

All other requirements of this specification must be adhered to.

eneral information

here are numerous flashing details that have been proven by experience over the years. There are normally a number of acceptable construction details for accomplishing one purpose. The architect should select a detail that best serves the purpose under the various and different conditions concerned with the specific job at hand. In certain cases, slight modifications are necessary to adjust a proven detail to job conditions or one method may serve better than another.

The details shown in this manual are some suggestions based on experience. Space limitations prohibit listing many others.

Design or selection is a responsibility of the architect.

Koppers representatives are available to review flashing details to assist the architect in providing the best details for specific jobs.

Raised Edge

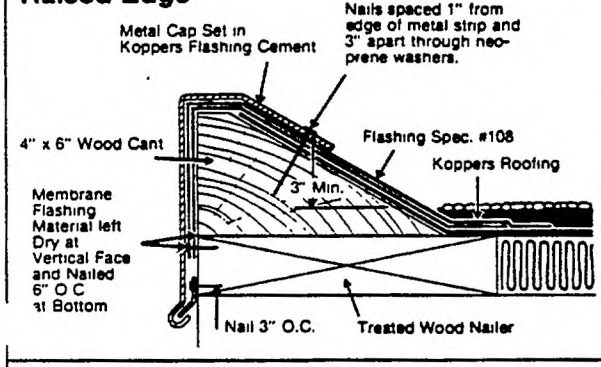

Relief Joint

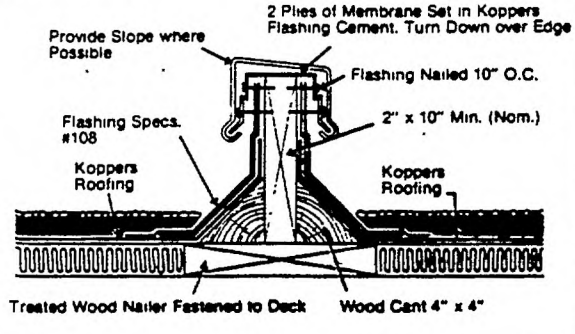

Equipment Support

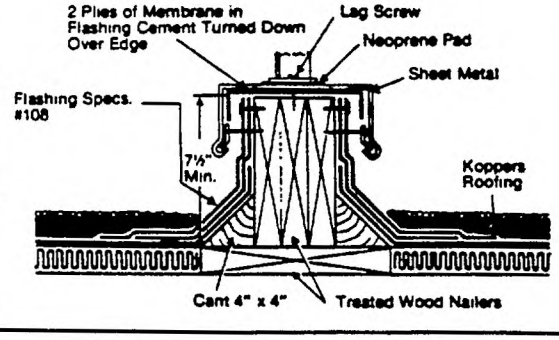

Parapet/Precast or Poured Concrete

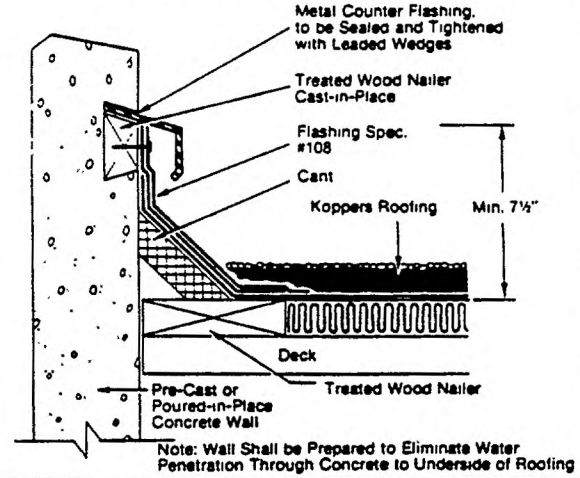

Note: Wall Shall be Prepared to Eliminate Water Penetration Through Concrete to Underside of Roofing

Parapet/Metal Curtain Wall

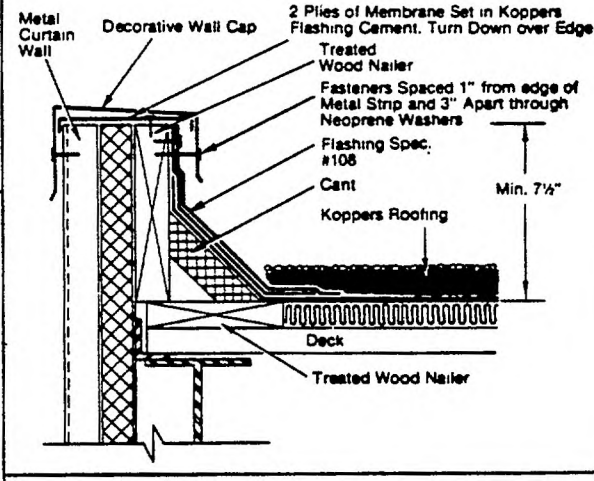

Parapet/Wall Cap

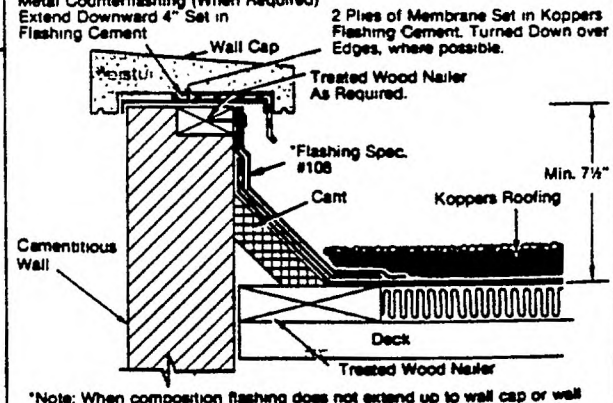

*Note: When composition flashing does not extend up to wall cap or wall cap does not provide water egress protection, a metal counterflashing must be installed according to procedures found in flashing specifications.

Flashing Details (continued)

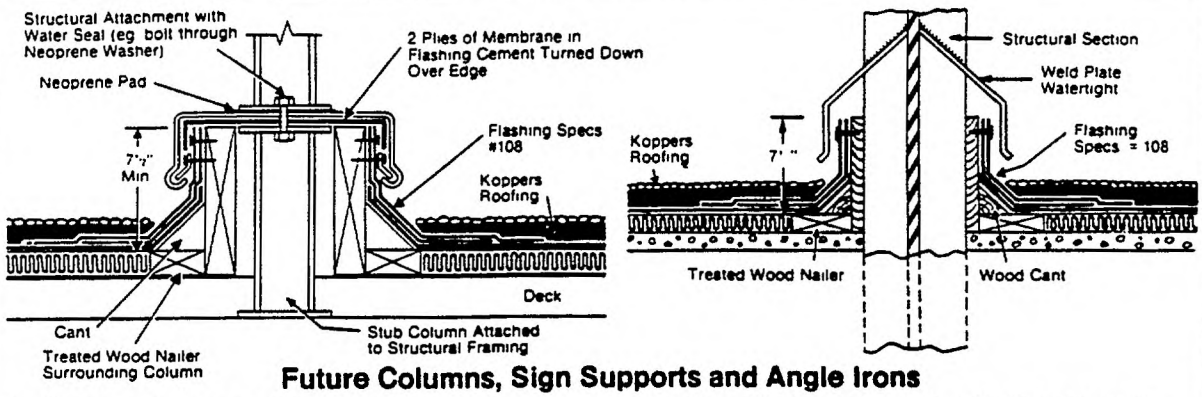

Future Columns, Sign Supports and Angle Irons

At all locations where stub or future columns, sign.supports and angle irons are to penetrate built-up roofing, Koppers recommends wooden curbed base units with cant strips to be installed to accept KMM flashing systems. Where structural steel section extends beyond "stub" height, metal cap flashing with tight fit to the structural section must be fabricated and continuously welded to the projection to assure a watertight metal cap.

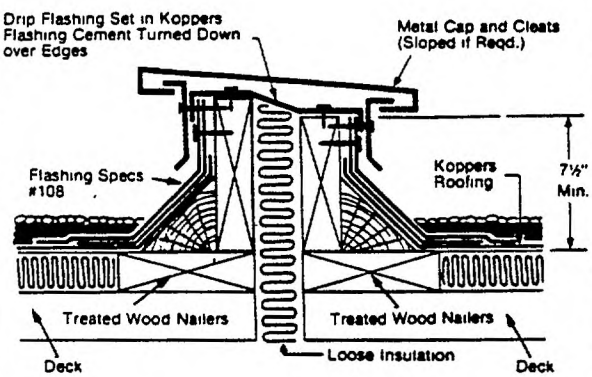

Curbed Expansion Joint

Curb expansion joints are to be flashed in accordance with Koppers specifications for parapet walls. Metal cap must be designed to expand so as not to disturb flashing.

It is the responsibility of the designer of the building to provide for adequate expansion joints.

For the protection of the roofing system against splits caused by expansion and contraction, Koppers recommends that an expansion joint be installed: (1) on roof areas larger than 200 feet in each direction, (2) at all places where the structural supports and roof assembly change direction, (3) where type of adjoining deck materials change.

Where control, expansion, or contraction joints are provided in structural steel, deck material, or deck system, provisions must be made for continuation through the roofing system. See (Expansion Joints) Page 11.

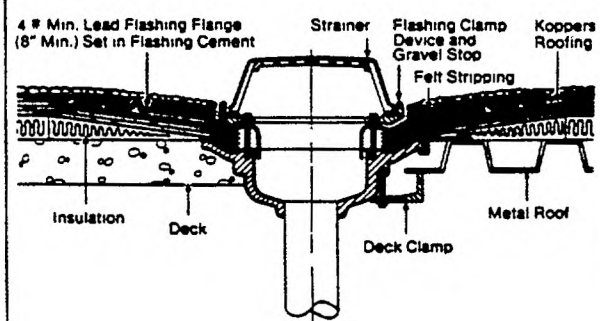

Roof Drain

All roof drains shall be provided with metal roof drain flashing flanges which extend at least 12" beyond drain opening and shall be stripped with felt in accordance with drain detail. All drains should be provided with expansion joint sleeves.

The sheet metal flange furnished with the drain must be cemented to the surface of the felt with hot Coal Tar Bitumen or flashing cement. Over the flange apply, with alternate moppings or trowelings, two (2) reinforcing plies of felt so that the first extends not less than three (3) inches beyond the outer edge of the flange, and the second not less than six (6) inches.

Roof drains must be of a type provided with a wide lead or copper flange. Strainer construction should provide adjustment for meeting variations in roof level or slope.

To obtain proper drainage, roof drains should be located at points of lowest expected deflection in roof deck.

Note: Special care must be taken to prevent bitumen migration into drain openings.

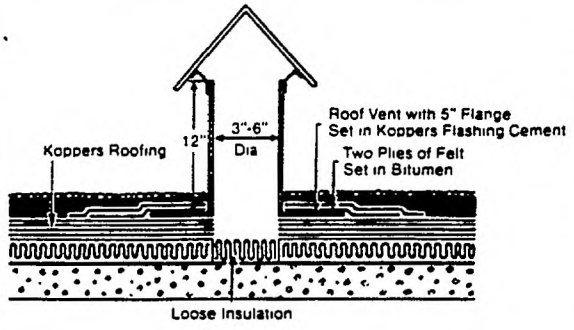

Roof Vent

Koppers does not recommend occasional or spot vents through the roof as the only venting method or a substitute for underside or continuous vented systems. There may be certain instances where spot or mushroom type vents might be deemed advisable by the designer for a new building (eg. at expansion joints for vent relief on long run underside continuous venting systems, etc.)

Walkways (Treated Wood Walkway)

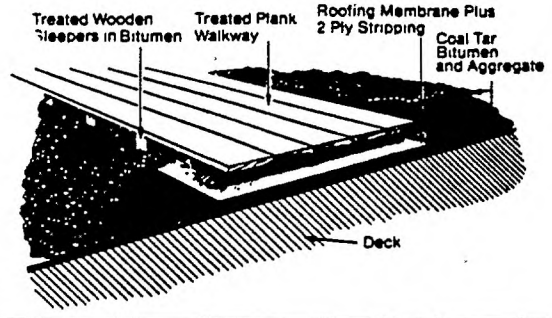

Non Wall Support Flashing

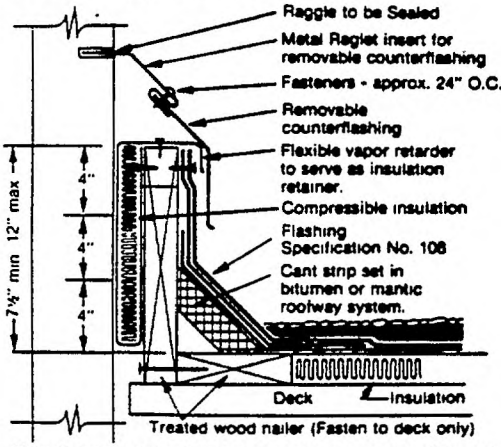

Note Suggested detail where possibility exists that differential movement will occur between deck and vertical surface. This detail is intended as a guide only.

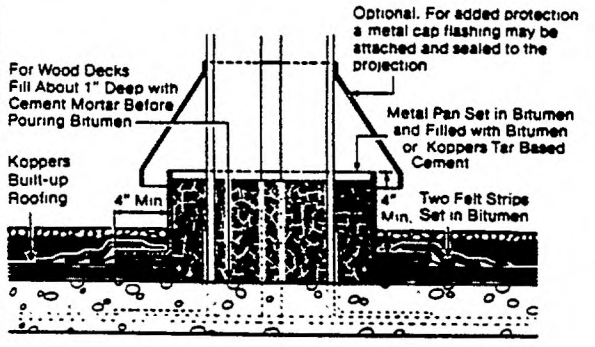

Pitch Pocket

Although controversial, the "Pitch Pocket" is one of the most frequently used design details.

The sheet metal flange must be cemented to the surface of the felt with hot coal-tar-bitumen or flashing cement. Over the flange apply, with alternate moppings, two (2) reinforcing plies of tarred felt so that the first extends not less than three (3) inches beyond the outer edge of the flange and the second no less than six (6) inches.

Fill metal pan with hot coal-tar-bitumen or flashing cement. Paint exposed sections of all reinforcing rods with dampproofing paint.

Traffic Pad

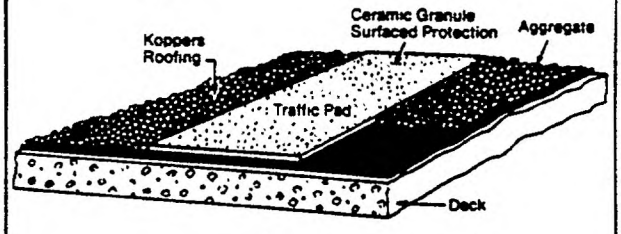

Roof Opening

Curbs extending a nominal 10 inches to 14 inches above roof surface shall be provided at all openings for skylights, ventilators, expansion joints, etc., to provide for installation of KMM flashing.

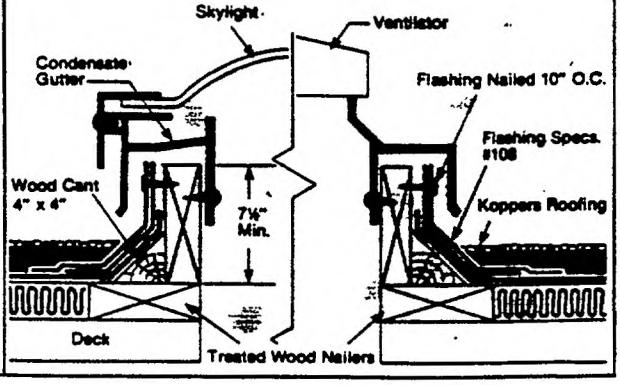

apered Cant

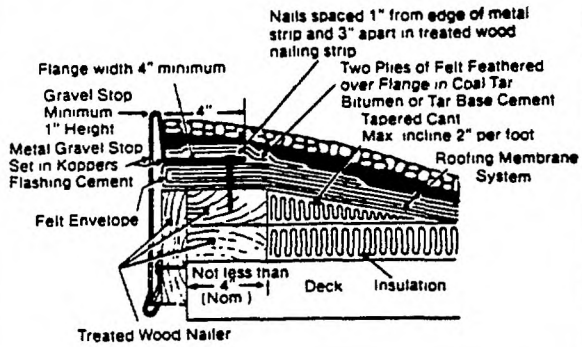

Tapered Cant

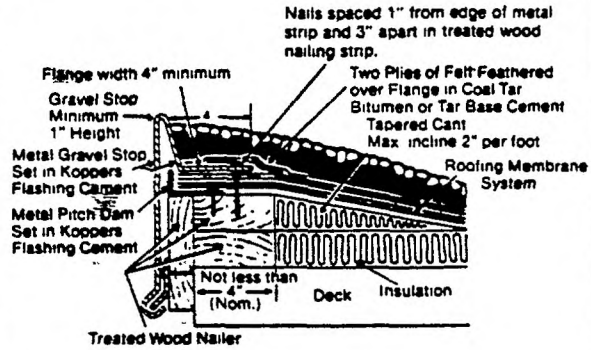

Hanging Gutter

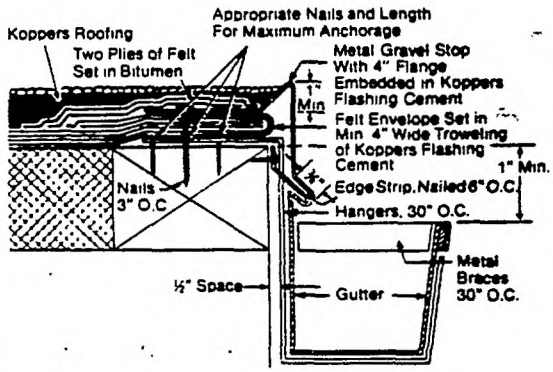

Vented Edge

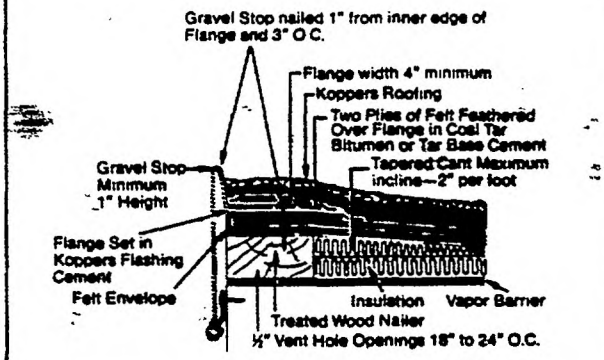

Vent Pipes, Stacks, Flagpoles, and Other Projections

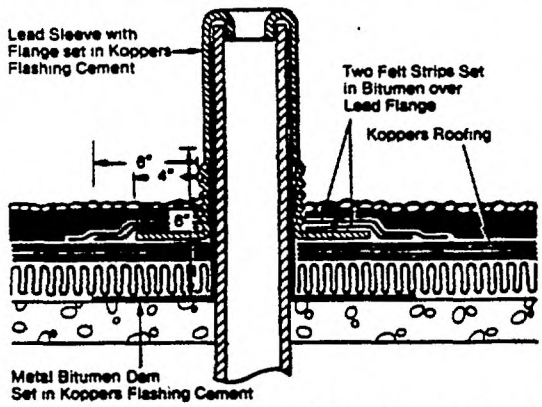

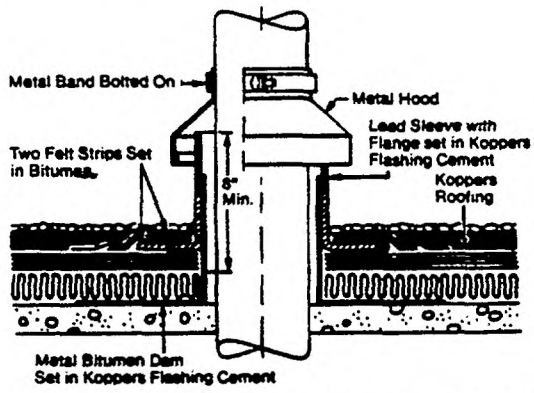

All vent pipes, stacks, flagpoles, or other projections penetrating the built-up roofing, whether indicated on drawings or not, must have a proper metal sleeve flashing with flange, pan flashing with flange or other flanged flashing installed.

Behind metal sleeves and beneath the roofing membrane next to deck install a metal bitumen dam as shown in detail. The sheet metal flange must be cemented to the surface of the felt with a mopping of hot Coal Tar Bitumen. Over flange apply, with alternate moppings, two (2) reinforcing plies of felt so that the first extends not less than three (3) inches beyond the outer edge of the flange and the second not less than six (6) inches.

SINGLE-PLY ROOFING SYSTEMS
KMM® Membrane Systems

KOPPERS
Architectural and Construction Materials

7 1/KOP

Description

KMM membrane is a versatile, prefabricated sheet of cold-applied roofing and waterproofing material. It is designed for application in roofing, reroofing, maintenance roofing, foundations, plazas and various other areas of construction where effective waterproofing is required.

KMM membrane is supplied in two types.

KMM Standard Membrane

KMM® Standard membrane is a five-layer laminate composed of a strong, flexible plastic core protected on each surface by a layer of modified bitumen and an outer film of polyethylene.

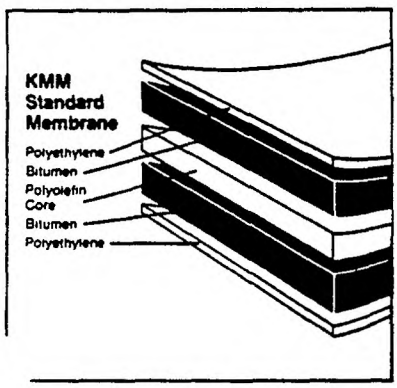

KMM Aluminum Membrane

KMM® Aluminum membrane is a five-layer laminate composed of a strong, flexible plastic core which is protected on each side with a layer of modified bitumen. The top surface is a heavy, embossed aluminum sheet and the bottom surface is a film of polyethylene.

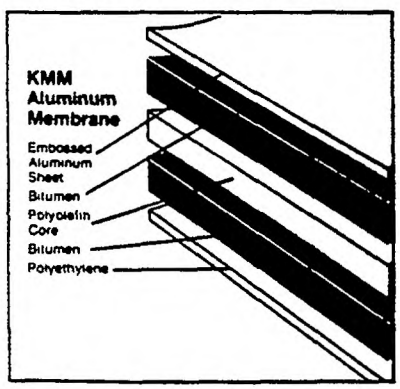

KMM Membranes

Both versions of KMM membrane are supplied in the form of compact, ready-to-apply rolls.

The standard membrane, loosely laid, is usually used in roofing systems which incorporate an aggregate surface or where protection from the atmospheric elements is afforded to the KMM surface by other means.



KMM Standard membrane is appropriate for use in vertically as well as horizontally applied waterproofing systems where surface protection is specified.

KMM Aluminum membrane is always adhered in KMM Adhesive or steep asphalt. It is ideally used in roofing systems in which the roof slope is too steep to permit aggregate surfacing. It is also employed in flashing systems.

KMM membrane has good elongation properties to withstand normal structural movement, when acceptable architectural practices are followed. It is suitable for application over most decks and commonly used insulating materials which provide continuous support for the KMM membrane.

KMM membrane is simple to install. It results in a completely waterproof system. It is factory-made and provides a factory-assured quality material of uniform thickness and composition.

The function of the bitumen covering is to serve as a carrier and protector of the central plastic core, and to provide the basis for the heat fusion between the sheets while adding to the water resistance of the laminate.

Product Information
KMM Membrane

	KMM Standard Membrane	KMM Aluminum Membrane
Roll Size	43" x 33 L.F. 118 sq. ft. 107 sq. ft. coverage	43" x 33 L.F. 118 sq. ft. 107 sq. ft. coverage
Thickness (nominal)	160 mils	120 mils
Weight (nominal)	99 lbs./roll (includes packaging & core)	76 lbs./roll (includes packaging & core)

KMM Adhesive

An asphalt base adhesive that bonds KMM Membrane to most surfaces.

Package Size: 5 and 55 gal. containers.

Weight: Approx. 55 lbs. per 5 gallon container and 600 lbs. per 55 gallon drum.

Stonemat

A 3 oz. polyester mat of high burst strength used under stone topping. Rolls are 8' x 450'.

Color Coatings for KMM Aluminum Membrane

Field applied coatings for KMM Aluminum membrane are available in 14 colors. For color selection consult Koppers Master Color Selection Chart 560-L under Koppers Acrylic Emulsion No's. 600 and 610.

KMM® Roofing Systems

General Requirements

The data contained herein is primarily oriented toward roofing systems. However, much of the information is also applicable for waterproofing systems. Contact your Koppers representative for specific data concerning KMM waterproofing and/or further information pertaining to KMM roofing systems.

All decks shall be installed in accordance with the deck manufacturer's specifications, and shall be in compliance with Koppers General Requirements.

All surfaces must be dry, frost free, reasonably smooth, clean, rigid and free from debris, loose materials, projections, holes, release agents or other contaminants which might cause rupture of the membrane and/or adversely affect the KMM membrane application and performance. Dust shall be removed from the surface immediately before application of the KMM membrane system, especially from those which incorporated the use of KMM Adhesive to adhere the membrane to its substrate.

The placing of conduits, bolt heads, etc., above the roof deck and below the roofing membrane is not recommended.

All projections or openings in the deck should be completed prior to the application of the roofing. Insulate all hot water and steam pipes which project through or are near the surface to be roofed or waterproofed. This is to prevent possible damage to the KMM system.

The proper design, specification and positioning of the various components of the roof structure system are the responsibility of the building owner or his designer. Any subsequent failures due to either the installation or lack of installation will not be Koppers responsibility.

In approving any deck as satisfactory to receive a KMM system, only the deck surface is accepted.

It is the responsibility of the building designer and the deck manufacturer to provide for expansion and contraction in a manner that will provide a stable base for the KMM membrane, for support of maximum anticipated loads, for secure attachments vertically and laterally, and for the selection of the deck material and construction details including their ability to contain bitumens or adhesives used for attachments of the KMM membrane or other components of the system.

Koppers will not assume responsibility for deck defects, or the effect of deck defects on Koppers roofs.

The information in this manual pertaining to materials and application methods other than for KMM roofing, is offered to assist the designer in establishing their normal position in the roof structure system. They should not be construed as part of the KMM roofing system, as endorsement or as part of the designated specifications, other than to establish a suitable roofing base in the roof structure system.

KMM Membrane is not intended to offer chemical resistance and must not be used on roofs subjected to corrosive or otherwise damaging solutions, vapors, etc.

Guarantee

A guarantee is available on KMM Membrane roofs when applied by a KMM Qualified Applicator. See page 6 for further information.

KMM Membrane Systems meet these codes

- FM Class 1, 1-60, 1-90
- UL Class A • ICBO • SBC
- CMHC

Contact your Koppers representative for information on the KMM Membrane System that meets your specific code requirements.

Deck Requirements

METAL DECKS

Board insulations are necessary over this type of deck. Surface must be free of loose rust and oily substances. Deflection should not exceed 1/240 of the span.

STRUCTURAL CONCRETE (POURED & PRECAST)

Where insulation is specified on concrete slopes exceeding 2" per foot, insulation stops shall be installed to retain insulation in place. Treated wood insulation stops 2" (nom.) wide, and equal to the thickness of the insulation, shall be installed to the top of the surface of the deck by means of bolts, screws, or other acceptable fastener, countersunk to be flush with surface of insulation stop.

All concrete and masonry surfaces must be cured, dry and free of loose material. All cracks, holes, voids and open areas shall be wetted with water and then carefully filled with Portland Cement Mortar, struck flush, and permitted to dry.

When KMM Adhesive or steep asphalt is to be applied directly to the concrete surface, the concrete must be cured, free of moisture, dust and other contaminants including curing agent and form release agents.

Where a curing agent has been used, apply a glass base sheet, solid mopped in steep asphalt (18-23 lbs./sq.) or mechanically fastened with approved fasteners, prior to the application of KMM Adhesive.

Concrete surfaces to which KMM Adhesive or steep asphalt will be directly applied must be primed with Koppers High-Pen Primer 452 at the rate of 1/2-3/4 gal. per square.

All joints must be grouted smooth and level with the deck surface. All slab surfaces must be even with the surface of the adjacent slab, or edges must be gradually and smoothly tapered to adjacent slab.

For precast concrete, strip all joints with 6" wide felt stripping set in Koppers Flashing Cement, or 6" wide KMM Standard membrane substrate-fused.

WOOD FIBER DECKS

KMM Aluminum Membrane should not be applied directly over wood fiber decks. A glass base sheet set in steep asphalt must be applied prior to the application of KMM Aluminum Membrane. The base sheet shall be laid unattached prior to KMM Standard application.

GYPSUM DECKS

Decks must be cleared of dirt and debris and all other foreign matter and all holes, cracks or other voids must be filled flush with the surface.

Poured gypsum decks sometimes cause trouble because the roofing is laid before the deck is thoroughly dry. When this happens the result is a blistered and buckled membrane, or, just as serious, insulation curls and makes an unsatisfactory job. The roofing contractor, backed by the architect, must insist on a thoroughly dry deck before beginning work.

All joints must be grouted smooth and level with the deck surface. Slab surfaces must be even with the adjacent slab surface or the edges must be gradually and smoothly tapered to the adjacent slab.

KMM Standard may be loose laid directly over the deck surface.

Prior to the application of KMM Aluminum, nail a glass base sheet terminating at the base of the cant or at the perimeter of the deck under metal edges.

WOOD DECKS

Plywood shall be exterior grade. All wood shall be well seasoned, dry, and preferably treated. End joints shall have adequate bearing. Loose or void knot holes, large cracks, etc., shall be covered with appropriate material. All nail heads must be flush with surface of wood decking.

KMM Standard Membrane: When applied over wood decks, lay a base sheet unattached over the deck surface, lapping 4" on side and 6" on end laps.

KMM Aluminum: Not to be applied directly to wood decking. Where specified over wood decks, the wood surface shall be covered as follows:

Nail glass base sheet with approximately 100 acceptable nails (capable of developing a minimum 40 pound nail pull-out strength) followed by a glass base sheet solid mopped in steep asphalt.

LIGHTWEIGHT INSULATING DECKS

Lightweight insulating decks include lightweight aggregate concrete (20 to 40 lbs. per cu. ft. oven dry density); foamed concrete, gypsum and thermosetting asphaltic decks.

KMM Standard may be loosely laid directly over the deck surface.

When KMM Aluminum is specified the following requirements must be met, prior to application of the KMM:

1. Except for Dycon® Concrete, lightweight insulating deck systems must be capable of venting excess water vapor to the underside.

Koppers will not accept lightweight insulating decks when placed over vapor barriers, poured concrete substrates, unvented metals, or any type of base which will not permit these materials to vent from the underside. This is necessary to prevent a water vapor pressure build-up under the built-up roofing.

Occasional or spot vents through the roofing as the only venting method are not satisfactory substitutes for underside venting.

2. Nailable decks must be capable of developing at the very minimum, a 40 pound nail pull-out or withdrawal strength.

3. A glass base sheet must be nailed terminating the base sheet at the base of the cant or at the perimeter of the deck under metal edges. (100 nails per sq. min.)

4. Koppers will not be responsible for failure of the insulating deck to remain integral or for disbonding of the roofing from the surface of the deck.

Board type insulation is to be applied over lightweight insulating deck, provisions must be made between the fill and the board insulation to prevent fill moisture from affecting the insulation and roofing.

Vapor Retarder

Recommendation of a vapor retarder is the responsibility of the design professional, including selection of compatible materials and installation method.

Expansion Joints (Building)

KMM roofs, especially those employing the loose laid membrane concept, are able to withstand building movement to a greater degree than conventional materials, but **good design practices dictate that expansion joints should be employed for protection of the overall roofing system.** The use, location and design of building expansion joints should be taken into consideration at the time of the original building design.

Although provisions for adequate expansion joints are the responsibility of the building designer, Koppers offers the following recommendations for the protection of the roofing system due to stresses caused by expansion and contraction of the building. Building expansion joints should be installed:

1. In large roof areas install expansion joints at 100 foot intervals.

2. At all places where the structural supports and roof assembly change direction.

3. Where types of adjoining deck materials changes.

KMM® TYPICAL DIMENSIONAL PROPERTIES

	METRIC		ENGLISH	
STANDARD GRADE				
Width	110	cm	43.3	in
Length	10.1	m	33.1	ft
Thickness (overall)	4	mm	0.157	in.
Top Layer, nominal	0.013	mm	0.0005	in
Bitumen Layer, nominal	1.93	mm	0.076	in
Central Core, nominal	0.09	mm	0.0035	in
Bitumen Layer, nominal	1.93	mm	0.076	in
Bottom Layer, nominal	0.013	mm	0.0005	in
Gross Area per Roll	11.11	sq m	119	sq ft
Normal Joint Overlap	10	cm	3.9	in
Net Coverage per Roll	10	sq m	107	sq ft
Weight per Roll	44	kg	97	lb
Weight of Core Mandrel	1.0	kg	2.2	lb
ALUMINUM GRADE				
Width overall	110	cm	43.3	in
Width of Aluminum Foil	100.3	cm	39.5	in
Length	10.1	m	33.1	ft
Thickness (overall)	3	mm	0.118	in
Top Aluminum Foil, nominal	0.09	mm	0.0035	in
Bitumen Layer, nominal	1.4	mm	0.055	in
Central Core, nominal	0.09	mm	0.0035	in
Bitumen Layer, nominal	1.4	mm	0.055	in
Bottom Layer, nominal	0.013	mm	0.0005	in
Gross Area per Roll	11.11	sq m	119	sq ft
Normal Joint Overlap	10	cm	3.9	in
Net Coverage per Roll	10	sq m	107	sq ft
Weight per Roll	34	kg	74	lb
Weight of Core Mandrel	1.0	kg	2.25	lb

TYPICAL MEMBRANE PROPERTIES

STANDARD GRADE	
Strength of Joints	Exceeds strength of membrane
Water Vapor Permeability (ASTM E 96 — Method B)	
a. g/h/m²	0.0288
b. grains/h/ft.²	0.00007
Permeance — Perms (grains/h/ft.²/in. Hg	0.0001
Pliability at -20° C (ASTM D 228)	Passes
Water Absorption (ASTM D 570:5 at 50° C), g	0.06
Dimensional Stability (ASTM D 570:5 d at 50° C), %	0.5
Sag Resistance (ASTM D 1855 (modified) :85° C) cm,	0.1
Thermal Conductance (Btu — in/h/ft.²/° F)	1.06

Where control, expansion or contraction joints are provided in structural steel, deck materials or deck system, provisions must be made for their continuation through the roofing system.

Board Insulations

These insulations come in varying thicknesses and sizes. The insulation manufacturer's specifications shall be followed and, in addition, shall be in compliance with Koppers General Requirements.

Roofing equipment must be of a type which will not damage the insulation used. Broken or damaged insulation sheets can only be used when the damaged portion is cut out.

No more insulation shall be laid in a day than can be protected by KMM membrane in case of sudden weather changes. Edges of insulation shall be brought closely together and shall not be forced into place. Where insulation joins vertical surfaces, the insulation shall be cut in a neat manner, allowing at least ½" clearance. Insulation joints must be staggered.

When more than one layer of insulation is used, joints in each layer shall not coincide. All layers shall be parallel to preceding layers.

Under loose laid KMM Standard Membrane, insulation other than urethane, urethane composite, and isocyanurate may be laid loose if the thickness of the board is minimun 3/4". Care must be exercised to insure snug joints.

Where attachment of insulation is required in these specifications, steep asphalt and/or fasteners must possess a minimum uplift resistance of 40 pounds per square foot (PSF).

Suitability of the kind of attachment is dependent upon the type of insulation and its substrate. This should be investigated by the specifier along with the various requirements, including wind uplift resistance, as described in the local building code and/or policies of the insurance agencies involved.

Koppers will accept the use of mechanical fasteners providing insulation manufacturer recommendations are followed, and they are approved by FM.

FM Approved fasteners may be used providing a glass base sheet is solid mopped in asphalt to cover all insulation.

Exeltherm Xtra — is acceptable loose laid under KMM Standard. May be used under KMM Aluminum when set in steep asphalt or mechanically fastened and covered with a glass felt base sheet set in steep asphalt. **(Use of Exeltherm Xtra under KMM qualifies for a Gold Seal Guarantee).**

Perlite, Fiber Glass, and Fiberboard — insulations may be used under KMM Aluminum only when a glass base sheet is firmly attached to the insulation with steep asphalt, prior to the application of KMM Aluminum. KMM Standard may be loose laid directly over these insulations.

Polystyrene is not acceptable under KMM Aluminum. Polystyrene with minimum 1.5 lb. density is acceptable under KMM Standard when the polystyrene is covered with a loose laid base sheet.

Urethane and Urethane Composite insulation boards over metal decks must be mechanically fastened with 5 approved fasteners per 3' x 4' board. Fasteners must be located at each corner and in the center of the board. For double layer applications, it is acceptable to fasten the first layer and solid mop the second layer in steep asphalt at the rate of 30 lbs. per square. On other decks and other existing smooth surfaces, urethane and urethane composite boards may be mechanically fastened as stated above, or solid mopped in steep asphalt at the minimum rate of approximately 30 lbs. of asphalt but of sufficient quantity to insure total attachment. Over these insulations a glass base sheet must be applied in a solid mopping of steep asphalt prior to the application of KMM Aluminum membrane.

Consult your Koppers Representative for use of other types of insulation.

Waterstops (Temporary Protection)

At the end of each day's work, waterstops must be installed to protect the insulation or substrate against water penetration. Waterstops consist of a single ply of KMM membrane (Standard or Aluminum Grade) extending a minimum of 6" beyond the terminal edge of the insulation. The leading edge of the membrane is then substrate-fused to the deck and top-sealed. Waterstops should be continuous and tight.

These temporary protective measures must be detached cleanly when work is resumed. KMM Membrane must be removed from the deck back to the top of the insulation.

Wood Nailing Strips

All non-nailable decks require wood nailing strips at eaves, edges, walls, roof openings, etc., for proper securing of metal flanges. Nailers must be securely and firmly attached to the deck or through to its supporting members. Nailers shall extend not less than 1" beyond the apron or flange.

Nailers should be treated to preserve their condition and hence their nail retentive power for the expected life of the roofing. Creosote or oilborn preservatives may affect the roofing they contact and should not be used. Nailers should be pressure-treated with a waterborn preservative such as Wolman® salts or with penta applied in a liquified petroleum gas carrier such as the Cellon® process.

Wolman® and *Cellon®* are registered trademarks of Koppers Company, Inc.

Traffic Surface

Where heavy traffic is anticipated over KMM Membrane, a suitable traffic surface such as Careytred® should be provided. Traffic pads shall be set in place over an additional ply of KMM membrane — fused to the KMM roof.

Inspection and Patching

All KMM membrane must be carefully inspected for construction damage and imperfect heat fusion prior to the installation of the protective topping. It is advisable to inspect lap fusions at the end of each work day. Any holes or tears must be patched with the appropriate KMM membrane. The patch must extend at least 4" in all directions from the edges of the tear or puncture. Seal into position with interply fusion and top sealing for Standard KMM membrane. Seal Aluminum KMM membrane by interply fusion.
Streaks or seams of bitumen on Aluminum KMM membrane may be touched up by high quality aluminum paint.

Cold Storage and Freezer Buildings

KMM Standard roofing systems may be used in cold storage and freezer building applications; with or without a ventilated air space between the deck and the insulated refrigerated area. For specific recommendations, consult your local Koppers representative.

Materials Protection

Although KMM membrane is waterproof in the roll, good practice dictates that it should be protected when stored outside by raised platforms and adequate cover.

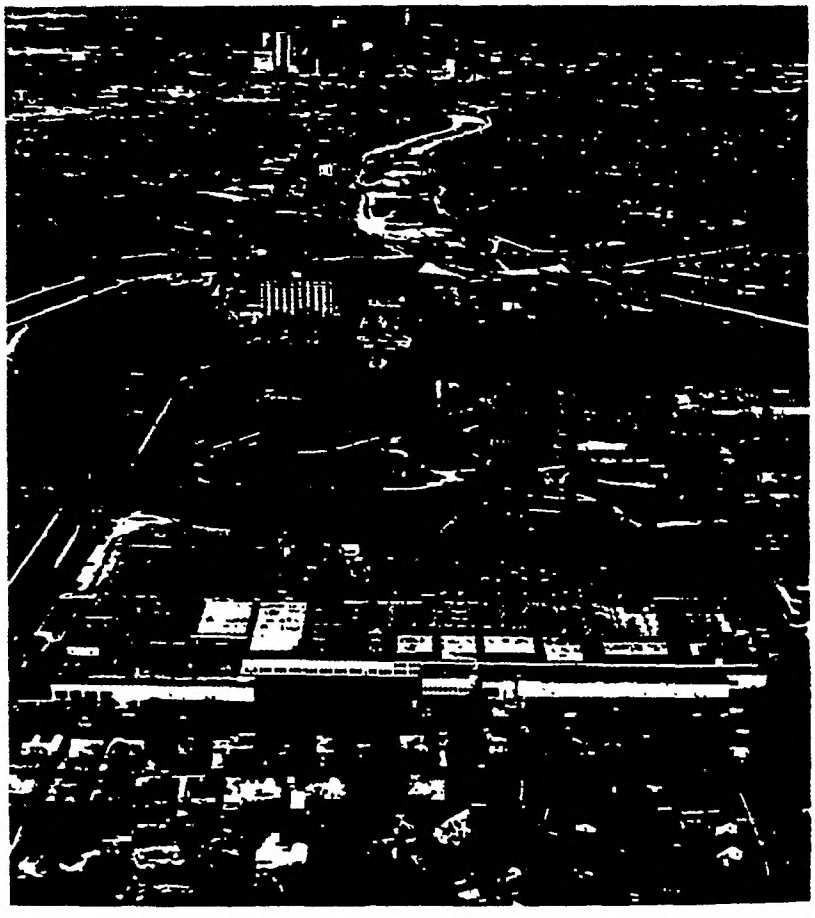

General Terminology and Reroofing Application Information

. .roofing Information

Rerooting Design Considerations:
During the reroof design and specification phase, and prior to commencement of roofing work, it is the responsibility of the building owner to have his architectural and/or structural consultant ascertain if the existing roof structure with the new roof installed will meet all local building codes, including structural limitations. If additional insulation is to be part of the reroof, an evaluation of the dew point location and its effect on the roofing system shall be determined by the owner.

Note: Koppers will not be responsible for any damage caused by excess loads on structural systems or damage due to rate or change in location of dew point.

Condition of Surface to Receive KMM Membrane

a. Gravel Surfaced Roofs: Remove loose gravel, surface irregularities, and repair any existing blisters, buckles, etc. Apply a minimum ¾" approved insulation, mechanically fastened or set in steep asphalt prior to application of KMM.Membrane.

b. Smooth Surfaced Roofs: Remove or repair, as necessary, any blisters or other abnormality of the existing membrane to give a surface which is free of sharp edges prior to the application of KMM membrane. Repairs must ' made with layer of Standard KMM ıbrane substrate-fused and top sealed at ı.e edges.

Prior to applying KMM Adhesive for KMM Aluminum Membrane application, prime roof surface with High-Pen Primer 452 at the rate of approx. ¾ gallon per 100 ft.², allow to dry.

c. Moisture in the Existing Roof: KMM Aluminum membrane (Specification No. 630) is always adhered to the substrate. It is not recommended for application directly over roofs which contain moisture.

KMM Standard membrane (Specification Nos. 610, 620 and 690) is loosely laid and ballasted by an aggregate topping. This system will tolerate dampness in the substrate and, depending upon the existing situation, extra precautions may be required such as spot and perimeter venting.

Note: For recommendations regarding specific precautions to be taken, see your local Koppers sales representative.

KMM Terminology

Heat fusion is a general term used to describe specific methods of adhesion of one layer of KMM membrane to another surface. In the process of heat fusion, the bitumen of the membrane is heated with a direct flame until it is plastic enough to flow under pressure. When pressure is immediately exerted to this ıned bitumen, it fuses to the surface to .ch it is applied. Specific types of heat fusion are described below. It should be noted that the external plastic film present will break and draw apart with the proper application of the flame.

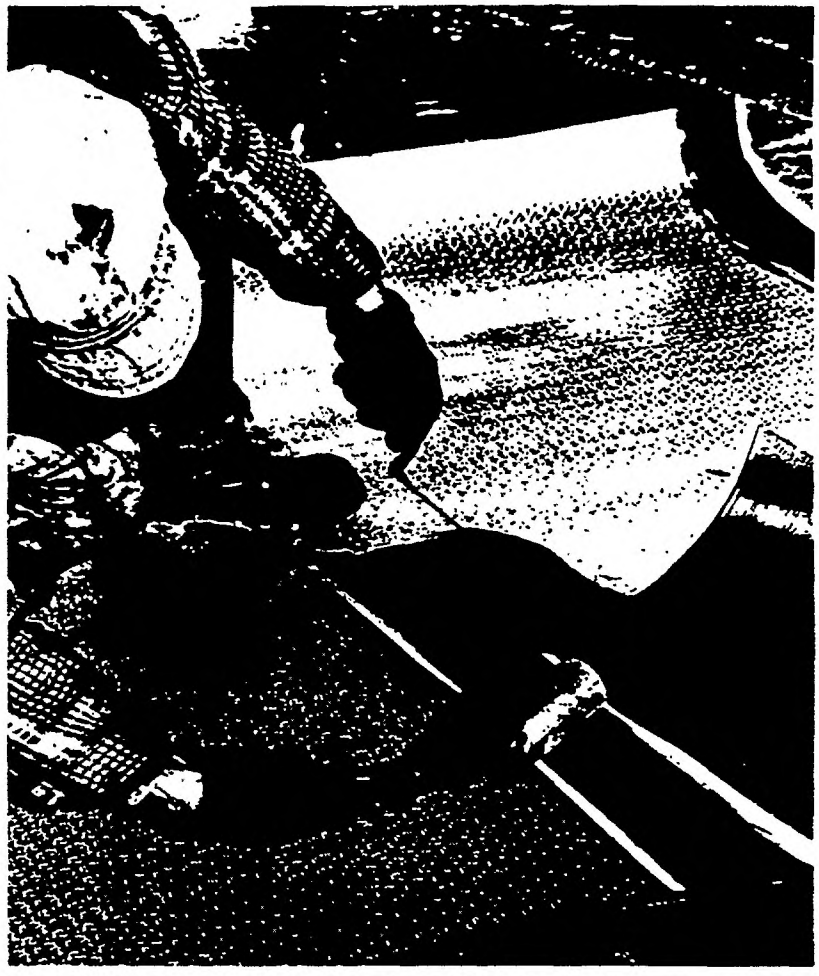

Substrate fusion is the specific type of heat fusion used to secure the KMM membrane to a substrate. The underside of the KMM membrane is heated until plastic. The heated underside is then quickly pressed or forced against the substrate surface so that a slight "run-out" of bitumen from beneath the edge of the membrane is observed. A fused seal is to be obtained.

Interply fusion is the specific type of heat fusion used to obtain a waterproof seal between two overlapping sections of KMM membrane. In practice, the flame is applied simultaneously to both surfaces of KMM membrane until each becomes plastic. For KMM membrane end and side laps, heat the bottom of the overlapping section, and the upper surface of the lower sheet until it becomes plastic. The two surfaces are pressed together to form a fused lap or seam of at least 4" in width. A slight "run-out" of bitumen from the lap joint is to be obtained.

Top sealing is the specific type of heat fusion used to make the second seal at substrate-fused and interply-fused joints. It is applicable only to KMM Standard membrane. Top sealing is accomplished by heating a 2" to 3" section at the edge of the top sheet until plastic. To develop a smooth, continuous filled joint, move the softened bitumen from the top sheet over the joint and onto the overlapped membrane with a roundnosed trowel.

Heat fusion equipment: The recommended torch equipment for fusing KMM laps is the KMM Torch Tip attached to the Goss AP-8 or Ap-12 handle. A roundnosed KMM Trowel is recommended for substrate fusion, interply fusion and top sealing.

KMM Aluminum Interply Fusion
The watertight lap is obtained on Aluminum KMM membrane by the heat-fusion attachment of the upper sheet to the exposed 4" selvage edge of the lower sheet. Overlapping membrane must extend over the selvage edge and approximately ½" onto the aluminum surface. During interply fusion of this lap, a bitumen bead shall be forced from between the mated edges. A slight heating of the edge of the upper aluminum surface while pressing with a trowel will also be beneficial in obtaining a uniform waterproof bond.

KMM® Ballasted System No. 610
Bituminous Aggregate Topping (BAT) System No. 620

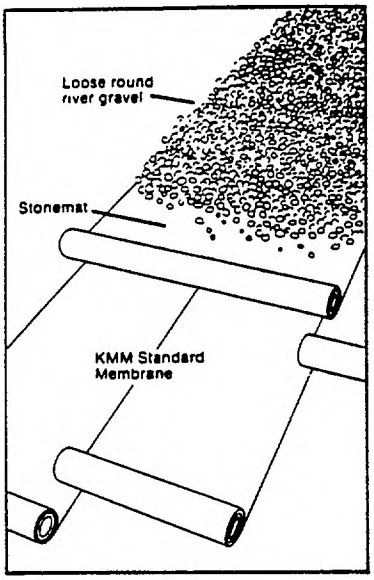

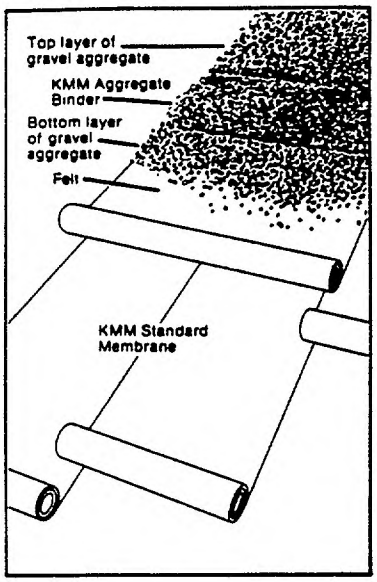

Materials
per 100 sq. ft. of roof

KMM Membrane (Standard)	1 ply
Stonemat or No. 15 Non-Perforated Asphalt Felt	1 ply
Surfacings	
Loose Aggregate	1,000 lbs. min.
BAT System	650 lbs. min.
Paver Stones	1,000 lbs. min.

Slope Requirements

1" per foot maximum with loose aggregate topping, 1½" per foot maximum with BAT topping, 1" per foot maximum with Paver Stones.

General Information

General Requirements on Page 22 through 25 and Flashing Detail/Specifications on pages 30 through 32 are a part of this specification and must be adhered to where applicable.

Prior to beginning installation of the KMM roofing system substrates shall be inspected by the roofing contractor for dryness, smoothness, rigidity and freedom from debris. All projections and holes which might cause rupture of the membrane are to be repaired. Review "Deck Requirements", Page 22.

Procedure

1. Prior to starting the application of the roofing membrane, cushioning or stripping layers of Standard Grade KMM membrane shall be applied in areas of potentially high stress or sharp edges. These areas include interior and exterior corners, major changes in directions of slope, metal flanges, etc. Cushioning layers shall be applied prior to the main KMM membrane system and shall be fused in place, and then top-sealed to form a smooth transition surface.

2. Prime new and existing metal, masonry walls and wood surfaces with High Pen Primer 452 at rate of ½–¾ gal/square. Allow to dry prior to fusion of KMM.

3. Coat face of fiber cant strip with KMM Adhesive (approximately 2 gals/square) and allow to dry before fusing KMM roofing membrane to cant.

4. Determine the direction of water drainage and the low point of the deck. Beginning at the low point of the roof slope, install one ply of KMM Standard membrane. The direction of laps shall be such that the water flow is not against the laps. The direction of the overlap shall be changed as the direction of the water flow changes.

5. Each sheet of KMM membrane shall be set in place for 30 minutes and shall be stretched to remove any wrinkles prior to fusion. Extend the KMM Standard roofing membrane a minimum of 4" above all cants.

6. All side and end laps shall be 4" and interply-fused and top sealed. Pressure shall be applied with a steel roller (minimum 6 inches wide) immediately behind torch while bitumen is still molten. End laps of KMM Standard membrane shall be staggered a minimum of 6". Interply fusion of side lap shall be completed before fusing end lap of the same sheet.

7. Extend the KMM Standard roofing membrane a minimum of 4" above all cants. Substrate-fuse to face of cant and wall, and top-seal along the upper terminal edge. When fusing KMM to wood or other materials that easily burn, apply torch to **KMM only** and press KMM into place.

8. Any KMM Standard membrane which will not otherwise be covered by a topping shall be protected with a layer of Aluminum KMM membrane extending a minimum of 4" beyond the edges of the unprotected membrane and substrate-fused around its perimeter. Specific details of the installation must be agreed upon between the architect and Koppers prior to installation.

9. Install KMM Aluminum flashings in accordance with flashing specification described on Pages 30 to 32.

10. At the end of each day's work, temporary waterstops must be installed to prevent water penetration. Waterstops must be completely removed before continuation of application. See Page 24.

11. The contractor shall thoroughly inspect completed KMM membrane at the end of each day's work as well as just before top sealing, and ballasting.

12. When the flashings have been completed, lay Stonemat to completely cover KMM that will receive loose aggregate or No. 15 non-perforated asphalt felt when BAT is used. Install a loose aggregate over Stonemat or bituminous aggregate topping over No. 15 non-perforated asphalt felt. Refer to Page 27.

13. In accordance with good roofing practices, it is necessary to protect the roof membrane from damage by the trades and wind uplift. **All KMM Standard membrane shall be covered with Stonemat and ballasted within 48 hours following its installation.**

14. For reroofing information, refer to Page 25.



Loose Aggregate Topping and BAT Installation Information

Loose Aggregate Top Surfacing for System 610

A. Aggregate:
Washed round river gravel graded to ¾" nominal size (S.P. No. 57 — U.S. Department of Commerce Simplified Practice Recommendation R-163—). See "Aggregate Size Table" below.
Where washed round river gravel is not available, aggregate samples must be submitted to Koppers Technical Department for approval. **Slag is not a permissible aggregate.**

B. Application
1. Stonemat must be installed prior to aggregate surfacing, overlapping 4" minimum at end and side laps. Stonemat must extend at least 2" beyond edge of aggregate at perimeter of roof but in no case should it extend beyond outside edge of gravel stop. Stonemat must completely cover KMM Standard.

2. Over the Stonemat, apply loose aggregate at the rate of 1000 lbs. min. per square.

3. Aggregate application by gravel buggy is recommended.

Koppers Bituminous Aggregate Topping (BAT) — Top Surfacing for System 620

BAT topping consists of graded gravel and KMM Aggregate Binder.

The BAT is applied to the roof as topping at the rate of 650 to 700 lbs. per square (approximately ¾ to 1" thickness).

A. Materials
KMM Aggregate Binder was formulated for binding the specified aggregate applied over KMM Standard roof systems to protect the KMM membrane. KMM Aggregate Binder is not intended for use as an adhesive or repair material. Binder should be kept in warm storage during cold weather.

Aggregate: The gravel aggregate is to be clean and size graded to nominal ⅜" round gravel. (This is equivalent to S.P. No. 8 — U.S. Department of Commerce Simplified Practice Recommendation R-163.)

B. General Application Instructions
Preparation:
1. BAT is applied when the KMM roofing and flashing applications are complete. First application of stone must be applied within 48 hours of membrane application.

2. Roof surface must be free of ponded water.

3. Lay No. 15 **non-perforated** asphalt felt loosely over KMM Membrane prior to BAT topping, overlapping 4" minimum at end and side laps.

Application of BAT Topping:
BAT is applied in three steps resulting in a protective topping weighing 650-700 pounds per square. The steps are as follows:

1. Gravel aggregate is applied at the rate of 450-475 lbs. per 100 sq. ft. on the No. 15 felt. Aggregate application by gravel buggy is recommended.

2. KMM Aggregate Binder should be stirred thoroughly until the material is of uniform consistency. KMM Aggregate Binder is sprayed on the aggregate at the rate of approximately 3 gallons per 100 sq. ft. using suitable spray equipment. Keep KMM Aggregate Binder at room temperature prior to pumping during cold weather.

3. An additional layer of aggregate is then applied over the binder at the rate of 200-225 lbs. per 100 sq. ft. to achieve a finished surface. Aggregate application by gravel buggy is recommended. Heavy accumulations of aggregate should be evenly distributed. Aggregate should be applied immediately after applying KMM Aggregate Binder.

Paver Stones

Paver stones are acceptable ballast as long as minimum weight is 1000 lbs. per square.

A. Application
1. Pavers must be set on pedestals such as Terring Rings. Pavers must fit snugly against spacers.

2. As an alternative to above-mentioned pedestals pavers may be set on 6" squares of ¾" thick traffic pad such as Careytred. Corners of pavers must be centered on 6" squares allowing an approximate ¼" gap between pavers.

B. Maintenance:
Regular inspections (twice annually) must be made to ascertain that pavers and pedestals remain intact. Deteriorated and broken pavers and pedestals must be replaced to prevent damage to the KMM membrane. If deteriorated or broken pavers and/or pedestals are discovered, inspect KMM for damage.



Aggregate Size Table

Grading Requirements for Coarse Aggregates from ASTM Standard C 33 — Standard Specification for Concrete Aggregate Use Size #8 in making Bituminous Aggregate Topping (BAT). Use Size #57 for Loose Aggregate Topping.

Size Number	Nominal Size (Sieves with Square Openings)	Amounts Finer than Each Laboratory Sieve (Square Openings), Weight Percent							
		1½ in. (37.5 mm)	1 in. (25.0 mm)	¾ in. (19.0 mm)	½ in. (12.5 mm)	⅜ in. (9.5 mm)	No. 4 (4.75 mm)	No. 8 (2.36 mm)	No. 16 (1.18 mm)
57	1 in. to No. 4 (25.0 to 4.75 mm)	100	95 to 100	—	25 to 60	—	0 to 10	0 to 5	—
8	⅜ in. to No. 8 (9.5 to 2.36 mm)	—	—	—	100	85 to 100	10 to 30	0 to 10	0 to 5

KMM Aluminum Adhesive Bonded System No. 630
Hot Mopped System No. 630-III

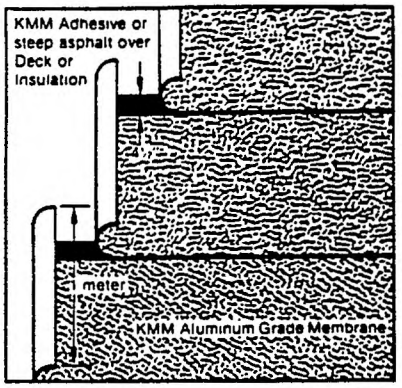

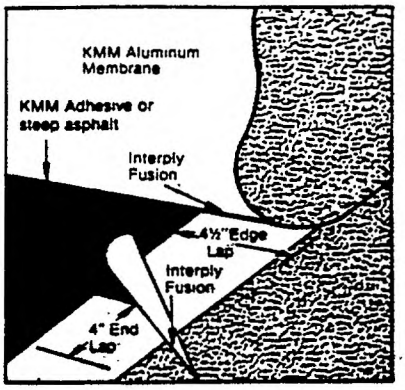

Materials
per 100 sq. ft. of roof

KMM Adhesive (630)
KMM Membrane (Aluminum)
Steep Asphalt Type III (630-III)

Slope Requirements
¼" per foot with positive drainage. Koppers will not be responsible for damage caused by ponding water.

General Information
General Requirements of Pages 22 through 25 Flashing Detail/Specifications on Pages 30 to 32 are a part of this specification and must be adhered to where applicable.

rior to beginning installation of the KMM roofing system, substrates shall be inspected by the roofing contractor for dryness, smoothness, rigidity and freedom from debris. All projections and holes which might cause rupture of the membrane are to be repaired. Review deck requirements Page 22.

Procedure
1. Prior to starting the application of the roofing membrane, cushioning or stripping layers of Standard Grade KMM membrane shall be applied in areas of potentially high stress or sharp edges. These areas include interior and exterior corners, major changes in directions of slope, metal flanges, etc. Cushioning layers shall be applied prior to the main KMM membrane system and shall be fused in place and top-sealed to form a smooth transition surface.

2. Prime new and existing metal, masonry walls and wood surfaces with High Pen Primer 452 at rate of ½-¾ gal/square. Allow to dry prior to fusion of KMM.

3. Coat face of fiber cant strips with KMM Adhesive (approximately 2 gals/square) and allow to dry before fusing KMM roofing membrane to cant.

4. Valleys of roofs sloped 1" per foot or more shall be protected as follows:

a. (No. 630) — A layer of KMM Standard hall be set in KMM Adhesive 1½-2 gals/square nd top sealed.

b. (No. 630-III) — A layer of Glass Base Sheet shall be solid mopped in steep Asphalt Type III at 18-23#/square.

KMM Standard and/or Base Sheet shall extend a minimum of 12" up the roof slope and 6" up vertical surfaces. Laps shall be 4" at side and end laps. KMM Standard shall be interply fused and top sealed..

5. Determine the direction of water drainage and the low point of the deck.

Beginning at the low point of the roof slope, install one ply of KMM Aluminum membrane.

The selvage edge of the Aluminum KMM membrane shall be positioned on the high side so that the direction of the flow of water is not against the laps.

Installation
1a. (No. 630) Set the KMM Aluminum Membrane into a full bed of KMM Adhesive, applied at the rate of 1-1½ gals/square. (See Adhesive Alerts) While adhesive is still wet, use linoleum roller thoroughly, rolling from center to edges of membrane to obtain total adhesion, and to remove all entrapped air from under membrane. On steep sloped surfaces use of a stiff broom is also acceptable.

1b. (No. 630-III). Set the KMM Aluminum membrane into a solid mopping of steep Asphalt Type III at the rate of 18-23#/square, and immediately broom into the steep asphalt. Leave top of sheet, including selvage, and termination areas free of asphalt to allow for interply and substrate fusion.

2. Subsequent courses are to be laid with 4" end and 4½" side laps, from the first course progressing to the high point. Allow laps to remain open as long as possible before fusing. Side laps shall be interply fused prior to interply fusing of the end lap of the same sheet. Pressure shall be applied on the top of the lap to insure solid contact.

Overlap of side laps must extend ½" onto aluminum surface.

3. End laps of KMM Aluminum membrane shall be staggered a minimum of 6". Interply fusion of side lap shall be completed before fusing end lap of the same sheet.

4. Leave laps of KMM Aluminum membrane open and delay fusion as long as possible. Be certain that all laps are fused before leaving job for the day.

5. Extend the KMM Aluminum roofing membrane a minimum of 4" above all cants. Substrate fuse to face of cant and wall. When fusing KMM to wood or other materials that burn easily, apply torch to KMM only and press KMM into place.

6. Install KMM Aluminum Flashings in accordance with flashing specifications described on Pages 30 to 32.

7. At the end of each day's work, temporary waterstops must be installed to protect from water penetration. Waterstops must be completely removed before continuation of application. See Page 24.

8. The contractor shall thoroughly inspect the completed KMM membrane at the end of each day's work and when the job is finished.

9. After completion of the Aluminum KMM roof and flashing system, a high quality "chrome" paint may be applied to any exposed streaks or seams of bitumen.

10. For reroofing information, refer to Page 25.

Adhesive Alerts
Adhesive should be stored at room temperature to facilitate application. Do not apply to frosty or moist surfaces.

KMM Adhesive can be applied by brush, roller, or squeegee. Do not thin adhesive. Mix thoroughly.

Adhesive application to porous surfaces will require approximately 50% more than specified amount of adhesive.

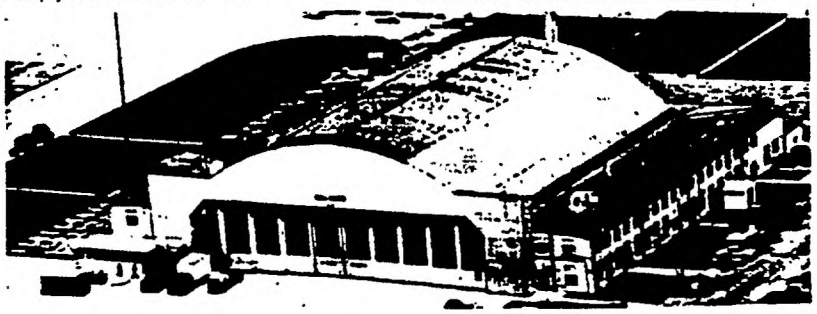

KMM® Insulated Roof Membrane Assembly System No. 690

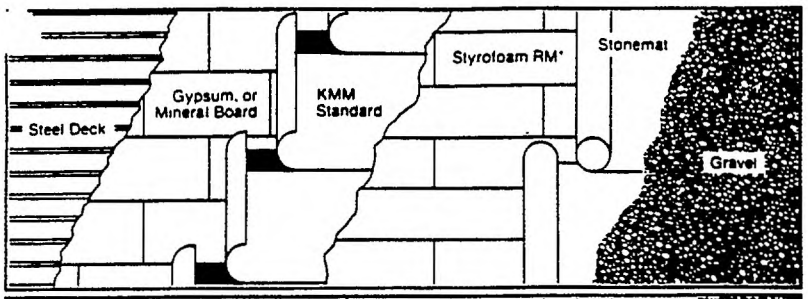

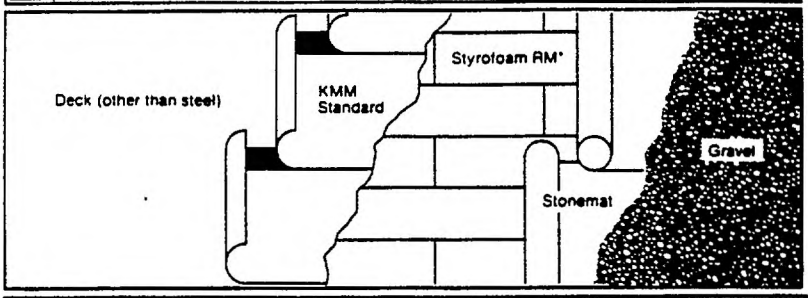

Materials

per 100 sq. ft. of roof

KMM Standard	1 ply
Styrofoam RM*	Desired Thickness
Stonemat	1 ply
Aggregate	1000 lbs. minimum

Slope Requirements

1" Maximum Positive drainage is required.

General Information

General Requirements on Pages 22 to 25 are a part of this specification and must be adhered to where applicable.

Prior to beginning installation of the KMM roofing system substrates shall be inspected by the roofing contractor for dryness, smoothness, rigidity and freedom from debris. All projections and holes which might cause rupture of the membrane are to be repaired. Review Page 22.

(Thermal value of STYROFOAM brand plastic foam insulation.) Average values based on five year aging of one inch samples at 75° F when tested by ASTM C177 and/or C518.

**Trademark of the Dow Chemical Company.*

Thickness	"R"	"C"
1	5.00	0.20
1¼	6.25	0.16
1½	7.50	0.133
1¾	8.75	0.114
2	10.00	0.10
2½	12.50	0.08
3	15.00	0.067
3½	17.50	0.057

Exposed STYROFOAM RM is subject to yellowing due to direct radiation of sunlight. If STYROFOAM RM is exposed for longer than 3 weeks it is necessary for a Koppers representative to authorize continuing the installation.

Roofs must be designed and constructed to drain completely free of water within 48 hours following a rain. Due to the deflection of steel decks, it is almost always necessary to provide slopes to properly placed drains.

The drain must be set directly on the deck so that the clamping ring is not higher than the rigid board. Sumps are recommended.

All flashing must be completed in each area prior to installing STYROFOAM RM.

Because the stone is not applied in bitumen it need not be dry and installation can occur in any weather.

The wood or plywood deck must be properly attached to supporting members and must be of sufficient thickness to prevent excessive deflection between supporting members. Wood roof decks shall consist of well-seasoned lumber, and edges of the board shall be tongued and grooved, ship-lapped or splined to prevent differential flexing of the boards. Any significant voids shall be covered with sheet metal.

Note: The following general specification is intended only as a guide. For more specific information, consult your Koppers representative.

Procedure

1. Decks

A. Poured and precast concrete, gypsum and lightweight concrete decks shall have KMM Standard Membrane laid directly on the deck following guidelines on pages 22 and 23.

B. Wood and wood fiber decks shall have a base sheet laid over deck unattached to the deck.

C. Steel Decks shall be no lighter than 22 gauge. Install a rigid board of ½" min. gypsum or ¾" min. mineral board. Be certain thickness of insulation board is adequate for flute span. ½" gypsum board shall be firmly attached to deck with steep asphalt at the rate of 15 lbs. per square, or mechanical fasteners approved by Koppers. Minimum of four fasteners per board is required and shall be located at the corners, 12" from the edges. Rigid board ¾" or thicker shall be attached with steep asphalt, or two approved fasteners per board.

2. KMM® Standard Membrane Application

KMM® Standard Membrane shall be applied as per KMM Roofing System Specification No.610 . Flashing shall be in accordance with appropriate KMM Flashing Specification.

3. Installation of Styrofoam RM® Brand Plastic Foam

It is recommended that STYROFOAM RM brand plastic foam be placed on the membrane as the membrane is completed.

Install the boards CHANNELED SIDE DOWN with closed joints; stagger end joints. The maximum acceptable opening on a random basis is ⅛". Install the foam to within ¼" to ¾" of projection and cant strips.

4. Aggregate Surfacing

After placement of STYROFOAM RM, install Stonemat over insulation overlapping 12" and immediately place aggregate over Stonemat. At roof perimeter, Stonemat shall extend a minimum of 2"-3" beyond edge of foam. An additional 4" piece of fabric is required around projections. Full widths of Stonemat should always be used.

Aggregate shall comply with ASTM C-33 Size Number 57 or ¾" crushed stone. Apply the aggregate at the rate of 1000 lbs. per square (10 PSF). As a general rule, ¾" stone at 1000 lbs. per square will be approximately 1½" thick. Place 2000 lbs/square of ballast or 17 lbs/ft² paved around perimeter, drains, and large penetrations.

Concrete pavers may be substituted for the stone to provide added usefulness to the roof area and to provide resistance to extreme winds. Pavers must sit on pedestals. Decorative stone top sufacing of the correct gradation can be used for architectural impact.

WARNING: STYROFOAM brand insulation is combustible and may constitute a fire hazard if improperly used or installed. It should be adequately protected. Use only as directed by the specific instructions for this product. STYROFOAM brand insulation contains a flame retardant additive to inhibit accidental ignition from small fire sources. During shipping, storage, installation and use, this material should not be exposed to open flames or other ignition sources.

For proper protection of STYROFOAM brand plastic foam in storage, consult the National Fire Protection Association (NFPA) standards or the authority having jurisdiction.

KMM Flashing Systems

Description

Flashings are the terminal closures of a roofing system which perform a waterproofing function. Flashings must be installed at all intersections formed by vertical surfaces to prevent water from entering the roof system.

Koppers flashings are an integral part of a Koppers roof. Designed for flexibility, KMM Aluminum flashings will provide many years of service.

Flashings must be installed as roofing progresses to prevent possible water damage to insulation and/or deck under the roofing.

General Requirements

1. All surfaces must be dry, frost free, reasonably smooth, clean, rigid and free from debris, loose materials, projections, holes, release agents or other contaminants which might cause rupture of the membrane and/or adversely affect the KMM membrane application and performance. Dust shall be removed from the surface immediately before application of the KMM Flashing system.

2. If guaranteed flashing is required, it must be installed in conjunction with a Koppers guaranteed roof and can be guaranteed for standard periods up to but not greater than the period for which the roofing is guaranteed. To be guaranteed, flashings must be set at least 12" above the roofing surface.

3. Metal Cap flashings are not guaranteeable and are not included under any flashing guarantee.

4. Metal work of any description used as flashing or a part of a flashing system is not guaranteeable and is not included under any flashing guarantee.

5. Vertical flashing that terminates without use of metal counterflashing, must be stripped with 8" wide KMM Aluminum Membrane totally fused 4" onto the wall and 4" onto the KMM Aluminum Membrane.

6. Cant strips shall be set firmly into place with mastic or hot bitumen prior to laying roof membrane.

7. Porous walls including wood must be primed with High Pen Primer 452 at a rate of ½-¾ gal.square. Allow primer to dry. (Minimum 4 hours).

8. Corners shall be lapped a minimum of 6" in each direction.

9. All metal and wood to which KMM membrane will be fused shall be coated with High Pen Primer 452 or KMM Adhesive and allowed to dry before fusion of KMM membrane.

10. Where KMM flashing is to be installed on a building with a non-wall-supported deck (tilt slab precast, masonry, curtain wall, etc.) refer to Non-Wall Support flashing detail on page 32.

11. Copper must not come in direct contact with the aluminum surface of KMM. When there is a possibility of such contact, coat the underside of the copper with Koppers Asphalt Roofing Coating 454 or KMM Adhesive.

Flashing System No. 710 Base Flashing

For flashing with maximum height of 14" from roof surface

Application Detail

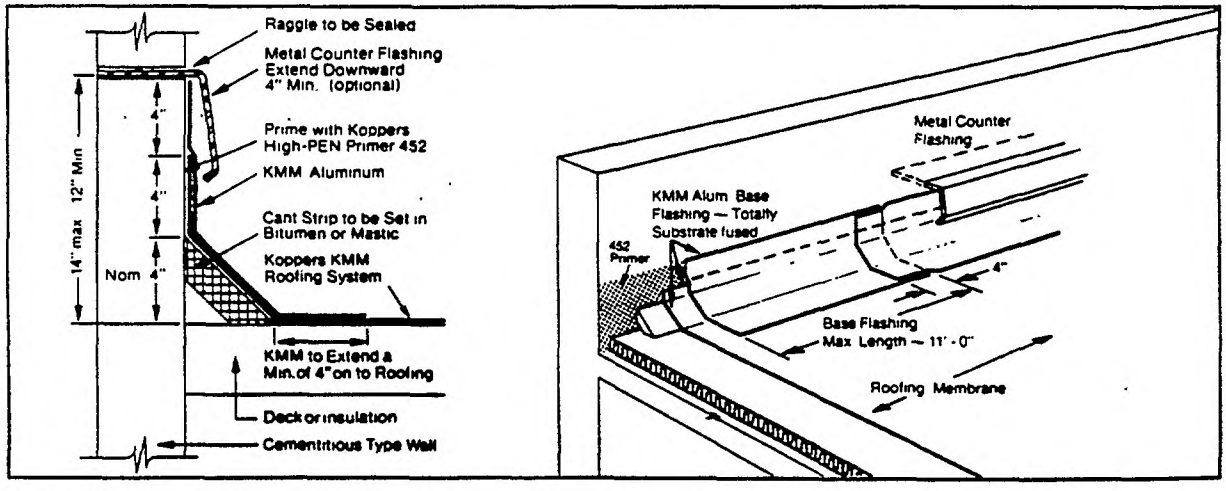

Procedure

1. KMM Aluminum membrane shall be unrolled and cut to desired width and maximum length of 11 feet. Note: KMM Aluminum membrane is available in precut rolls 9", 12" and 18" wide by 33' long.

2. No. 710 Base Flashing shall be fused in place so that it extends a minimum 4" onto surface of roof and a minimum of 4" above termination of roofing membrane on wall.

3. Apply pressure to KMM Aluminum membrane to obtain maximum contact to surface to which it is applied. There shall be no voids under the Base Flashing membrane. It is imperative that complete attachment be obtained to roof surface, roofing membrane over cant, and the wall. A small bead of bitumen should be squeezed out at edges.

4. Subsequent strips of Base Flashing shall be fused in place in the same fashion overlapping preceding strip 4". Overlap shall be interply fused to preceding strip. Pressure shall be applied to surface of lap to insure adhesion.

5. There shall be no adhesive used in No. 710 Base Flashing application.

6. The flashing must not remain open at the end of the work day.

7. The contractor shall thoroughly inspect the completed flashing system at the end of each day's work.

8. A high quality "chrome" paint may be applied to any exposed streaks or seams of bitumen.

9. Install metal counterflashings as required.

10. Complete the top surfacing of the roofing membrane to the base of the cant strip as may be specified.

Flashing System No. 720 Wall Flashing

For Flashing with maximum height of 28" from surface of roof

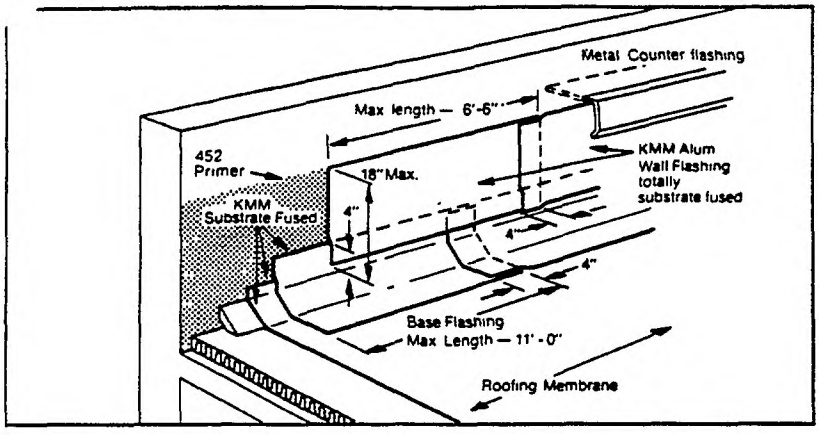

Procedure

1. Apply Base Flashing in accordance with Flashing Specification No. 710.

2. KMM Aluminum membrane used in No. 720 Wall Flashing specification shall be unrolled and cut to a maximum length of 6'-6" and maximum width of 18 inches. Selvage edge should not be used.

Note: KMM Aluminum membrane is available in precut rolls of 9", 12" and 18" wide by 33' long.

3. KMM Aluminum membrane strips shall be fused into place, overlapping Base Flashing 4". Total substrate fusion to the wall must be achieved.

4. Apply pressure to the fused KMM Aluminum membrane to obtain maximum contact to the wall. There shall be no voids under the Wall Flashing membrane. It is imperative that the membrane is completely and tightly fused to the wall. A small bead of bitumen should be squeezed out at edges.

5. A 4" overlap shall be interply fused to the Base Flashing, applying pressure to the surface of the lap to insure adhesion.

6. Subsequent strips of KMM Aluminum membrane shall be fused into place overlapping the preceding Wall Flashing 4". Overlap shall be interply fused and pressure applied to the surface of the lap to insure adhesion.

7. The contractor shall thoroughly inspect the complete flashing system at the end of each day's work.

8. A high quality "chrome" paint may be applied to any exposed streaks or seams of bitumen.

9. Install metal counterflashing as required.

10. Complete the top surfacing of the roofing membrane to the base of the cant strip as may be specified.

Flashing System No. 730 High Wall Flashing

For flashing with a height in excess of 28" from surface of roof

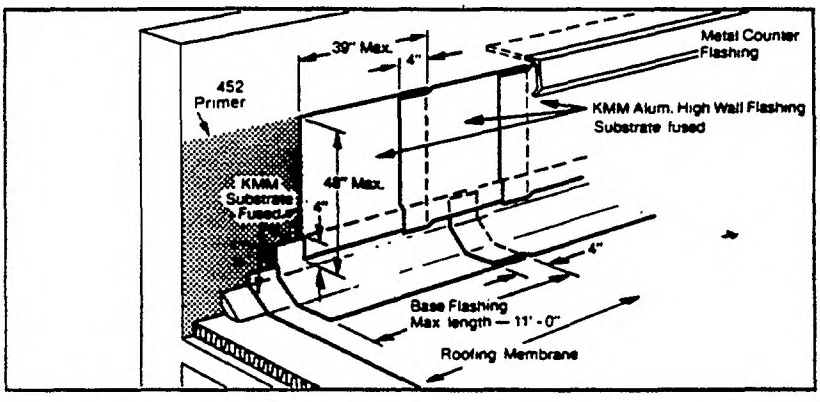

Procedure

1. Apply Base Flashing in accordance with ing Specification No. 710.

2. KMM Aluminum membrane used for High Wall Flashing shall be unrolled and cut into lengths not exceeding 48". Remove the selvage edge, leaving a maximum width of 39".

3. Totally substrate fuse KMM Aluminum Membrane to the wall in pieces not to exceed 39" wide by 48" high with 4" overlaps on base flashing and previously applied pieces.

4. Each piece of KMM Aluminum membrane shall be applied with the 48" maximum length extending vertically up the wall. It shall overlap the previously applied course of Base Flashing or High Wall Flashing a minimum of 4".

5. Rub, brush or roll thoroughly to obtain proper adhesion and to remove all entrapped air from under the flashing membrane.

6. The contractor shall thoroughly inspect the completed flashing system at the end of each day's work.

7. A high quality "chrome" paint may be applied to any exposed streaks or seams of bitumen.

8. Install metal counterflashing as required.

9. Complete the top surfacing of the roofing membrane to the base of the cant strip as may be specified.

Flashing System No. 760 Horizontal Flashing

Horizontal Flashing

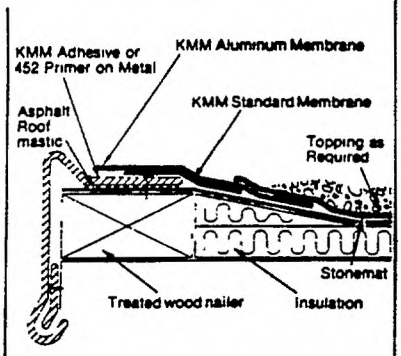

Procedure

1. All metal to be covered with KMM Membrane shall be coated with High Pen Primer 452 or KMM Adhesive. Allow to dry thoroughly.

2. Strip metal flanges using 4" minimum widths of KMM Standard membrane as a cushioning strip centered along the length of the entire edge of the flange. The cushioning must cover the edge of the metal where it meets the roofing membrane a minimum of 2" and must cover all nail heads. The balance of the width of the cushioning strip must extend a minimum of 2" onto the roofing membrane. Cushioning strip shall be fused to the roofing membrane and the metal flange and top sealed at edges.

3. Fuse a strip of KMM Aluminum membrane (approximately 10" wide) to the cushioning strip, roofing membrane, and metal flange so that it extends 4" beyond edge of cushioning strip onto roof membrane and to the outer edge of metal flange.

4. Apply pressure to surface of fused KMM membrane to insure adhesion and solid fusion.

5. Apply surfacing to roof membrane as may be required.

Hanging Gutter

Refer to Specification No. 760

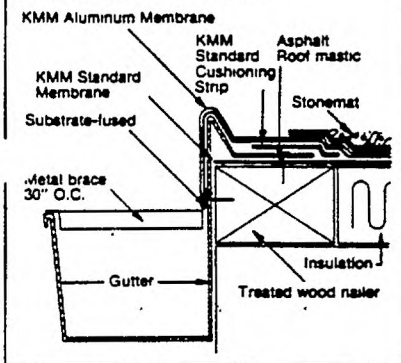

Hatch—Curb—Expansion Joint

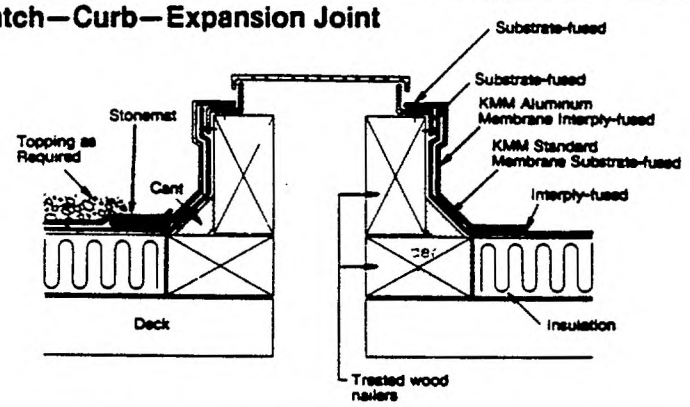

Non-Wall Support Flashing

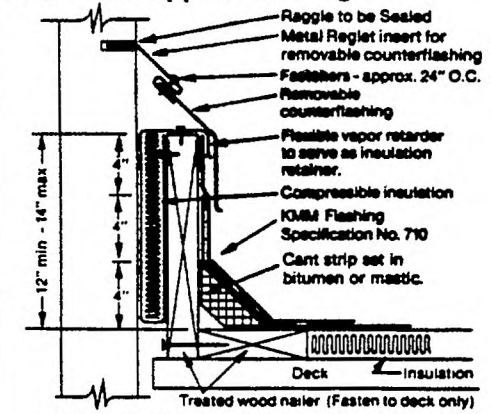

Note: Suggested detail where possibility exists that differential movement will occur between deck and vertical surface. This detail is intended as a guide only.

Roof Drain

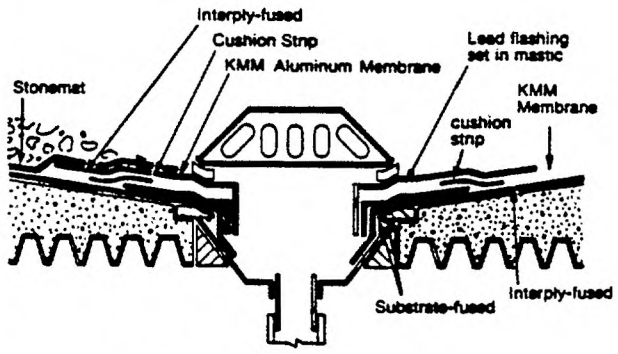

Note: Do not apply flame directly to lead flashing

Koppers Waterproofing and Dampproofing Systems

KOPPERS
Architectural and Construction Materials
7 1/KOP

OR DESIGN ASSISTANCE...

S. the majority of projects present such a wide variety of conditions, the specifier must take precautions in the preparation of waterproofing specifications and related details to maximize the possibilities of a permanently watertight application.

Koppers has had many years experience in the waterproofing field and offers the specifier design assistance in achieving the best possible waterproofing systems.

Coal tar membrane waterproofing systems

The function of waterproofing and dampproofing is to prevent the entry or passage of water through masonry or concrete structures. The most important property that must be possessed by any waterproofing or dampproofing material is its ability to resist prolonged contact with water.

Because of coal tar's natural resistance to moisture, bacteria and acid, it has proven to be the most effective hot applied waterproofing system available today.



KMM® membrane waterproofing systems

Koppers KMM Membrane is a cold applied, prefabricated waterproofing sheet designed f xceptional waterproofing protection. a cold applied sheet membrane is desired, ease of application, dependability, and economy make KMM the system you can rely on for your most critical waterproofing requirements.



Cold-applied mastic and liquid waterproofing and dampproofing systems

Many projects require the advantages of cold applied liquid or mastic moistureproofing materials. Koppers manufactures a wide variety of quality dampproofing compounds. Applied by themselves or in combination with reinforcing fabrics, Koppers dampproofing products will assure you of dependable moisture protection.

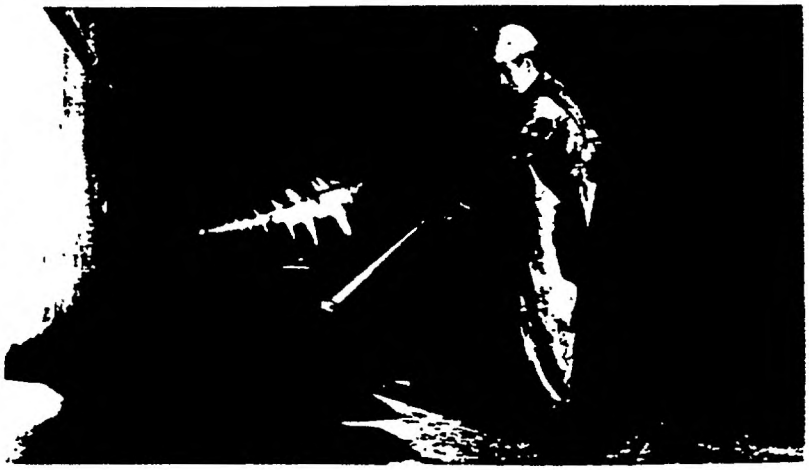

Coal tar plaza deck and wall waterproofing systems

Membrane Waterproofing

.terials

a. Coal Tar Waterproofing Bitumen A.S.T.M. D-450 Type III.

b. Membrane (Select one or combination). GLASFAB — A.S.T.M. D-1668.

Tar Saturated Cotton Fabric — A.S.T.M. F-173 Tarred felt — A.S.T.M. D-227.

c. Concrete Priming Oil — A.S.T.M. D-43-41.

General Requirements

a. Preparation of surfaces: Surfaces to be waterproofed shall be reasonably smooth and free from holes or projections which might cause puncture of the membrane. The surface shall be dry and thoroughly cleaned to remove dust and loose materials immediately before application of the waterproofing. Do not apply waterproofing where effects of freezing or moisture will adversely affect the waterproofing application.

b. Applicator: All membrane waterproofing shall be applied by an experienced roofing and waterproofing contractor.

Application Precautions

a. Waterproofing bitumen shall not be heated above 425° F.

b. Roll or press firmly all plies of membrane into the hot bitumen and apply without wrinkles, buckles or kinks.

- On vertical walls apply hot bitumen with on roller mops or by other suitable application techniques.

d. Apply membranes on vertical surfaces in courses not exceeding ten feet in length where immediate and careful backfilling is not possible. After each course of the waterproofing system is completed and before the top mopping is applied, nail each course at the upper edge before the next course is applied. Nail each succeeding course end-lapping not less than 10 inches.

e. Reinforce wall angles, corners or any place the waterproofing membrane course may be subject to unusual stresses with not less than 2 additional plies of fabric or GLASFAB reinforcement and moppings of bitumen.

f. Insulate and protect all hot water and steam pipes which project through or are near the surfaces to be waterproofed. Take the necessary precautions to prevent water from getting between the waterproofing and the waterproofed surface at all points where the membrane is penetrated by drains, pipes, etc. Apply extra plies of reinforcing membrane and bitumen moppings in these areas.

g. Carefully examine laps which have been exposed for any length of time, such as at the junction of a vertical wall and a slab, for defects and insufficient lap areas and repair as necessary before proceeding with further application.

h. Apply all membrane waterproofing systems in a workmanlike manner and use wood nailers treated with a water-borne preservative for all vertical wall waterproofing.

i. Protect the membrane from damage by other trades after installation to maintain the integrity of the waterproofing throughout the structure.

j. Ventilation should be provided in enclosed spaces during application.

Horizontal waterproofing applications:

1. Beginning at the low point of the slab mop the surface with hot Koppers Waterproofing Bitumen and immediately apply the reinforcing membrane over the entire area.

2. Be sure that each ply is solidly mopped and adhered.

3. For the various waterproofing systems lap the reinforcing plies as follows: (a) Two Ply System — lap 19 inches. (b) Three Ply System — lap 24-2/3 inches. (c) Four Ply System — lap 27½ inches.

4. Mop the entire top surface with Koppers Waterproofing Bitumen. The completed waterproofing forms a firmly bonded system and the reinforcement shall not be exposed at any place.

5. As soon as any portion of the waterproofing has been completed, cover it with the protection course specified, such as brick, tile, concrete, rigid insulation or other specified material.

Plaza deck waterproofing applications:

When membrane waterproofing is used in plaza construction with interior drains and the finish slab does not rest immediately on the waterproofing, but on concrete pedestals, the following additional precautions shall be taken:

1. If deck is sloped to interior drains, specify Waterproofing Bitumen conforming to ASTM Specification D-450 Type III.

2. Before the pouring or placing of pedestals supporting precast finish slabs, additional reinforcement shall be installed under each pedestal over existing membrane.

3. Extreme care should be taken to protect the finished waterproofing from damage by other trades during construction of towers, etc. Place a protective course over the finished membrane until the wearing surface is placed.

4. On precast concrete systems all joints should be grouted with flashing cement and stripped with a reinforcement fabric.

Below grade wall waterproofing application:

1. Apply a uniform brush coat of Koppers Concrete Priming Oil over the entire surface to be waterproofed (approximately 1 gallon for each 100 square feet).

2. Mop wall completely with Koppers Waterproofing Bitumen.

3. Starting at the most practical place, install the desired number of plies lapping them as follows: (a) Four Ply — lap 27½". (b) Three Ply — lap 24-2/3 inches. (c) Two Ply — lap 19 inchs. (d) When more than 4 plies are used in a membrane, it is recommended that they be installed in at least two operations, i.e., 2 plies over three, 3 plies over three, etc. maintaining the shingle fashion method in each operation.

4. Nail membrane with concrete nails 8 inches on centers through flat tin discs at the end lap horizontally across the membrane. If wood nailers are installed, nail membrane to nailer with 1½ inch roofing nails through flat tin discs 8 inches on centers.

5. Mop the entire surface with Koppers Waterproofing Bitumen. The completed waterproofing forms a firmly bonded system and the reinforcement shall not be exposed at any place.

6. As soon as any portion of the waterproofing has been completed, cover it with a protection course and backfill.

Typical Subgrade Waterproofing Application

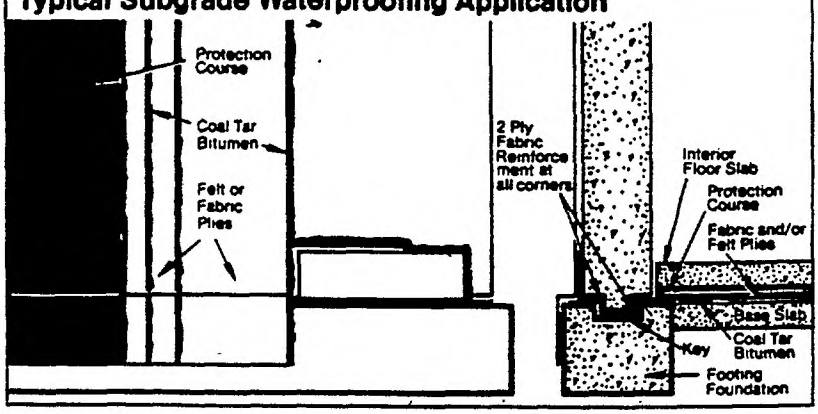

KMM Membrane Waterproofing Systems

Materials and stem Discussion

KMM waterproofing specifications are categorized as vertical and horizontal to differentiate between slight differences in application procedures dictated by the orientation of the surface to be waterproofed.

The vertical specification is written for foundation wall waterproofing, but may be modified for other vertical or steep surfaces to be waterproofed. The horizontal specification is written for split-slab or plaza deck applications but can also be modified for other low slope or flat surfaces. Consult your local Koppers sales representative for assistance with these modifications.

General Requirements

1. Surface to which KMM or KMM Adhesive is to be applied must be free of all dirt, debris, release agents, oils, or other contaminants that would impair the proper application and performance of KMM. Cracks or other deficiencies must be corrected before starting application.

2. All surfaces that receive KMM adhesive and/or substrate fusion must be primed with Koppers High-Pen Primer 452 at the rate of ½-¾ gallon per 100 square feet. Primer must be allowed to dry completely before proceeding.

3. Inside and outside corners must have a double thickness of KMM. This can be ɔmplished by 1) installing cushion strips of M that extend at least 4" in each direction from the corner, or 2) lapping each course of KMM around corner 4" in each direction.

4. Courses may be run horizontally or vertically; however, the top edge of each course must be substrate fused 4" onto the wall.

5. All exposed edges must be top sealed prior to leaving the job overnight.

6. Protection board must be placed as soon as possible to protect KMM membrane.

7. Horizontal waterproofing system must begin at the low point in the deck and layed up the slope.

8. KMM membrane applied vertically in lengths exceeding 6'-6" may be difficult to hold in place. It is for the discretion of the applicator to determine the appropriate length for his particular application.

Description

Koppers Vertical Waterproofing Specification No. 640 consists of KMM Standard membrane applied to a vertical surface in a full bed of KMM Adhesive. The KMM membrane forms a waterproof system through the use of joint heat fusion, a unique process whereby all contiguous joints are affixed together to develop a monolithic waterproof membrane. In addition, the entire system is completely ·red to the vertical surface to eliminate any ; which might permit collection of water between the surface and membrane.

This system is applicable for use with any vertical structural surface which provides continuous support for the KMM membrane.

Vertical KMM Waterproofing System No. 640

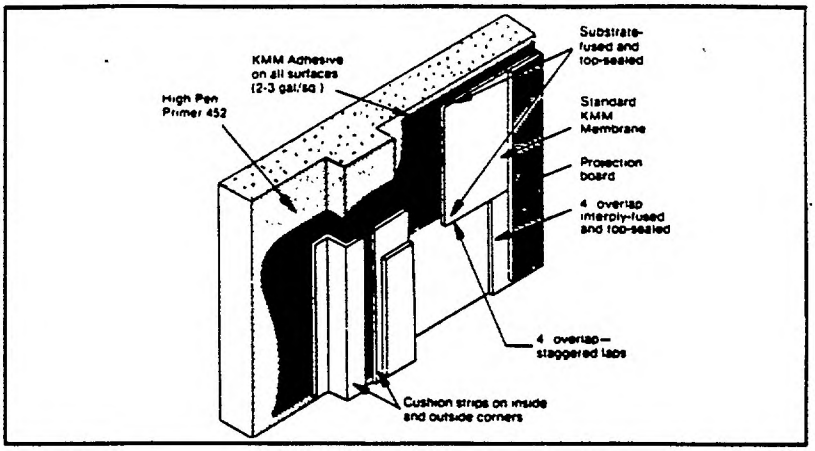

The general requirements and application procedures on this page are part of this specification and must be adhered to where applicable.

Procedures

1. If cushioning strips are used they must be applied prior to the installation of the KMM waterproofing membrane.

2. Apply adhesive at the rate of 2 to 3 gal. per square after primer has dried.

3. Starting at the low point, set the first course of KMM Standard membrane into a full bed of KMM Adhesive while the adhesive is still slightly wet. Rub and/or brush thoroughly to remove all entrapped air from under the membrane. End and side laps shall be 4". All end and side laps shall be interply-fused and top-sealed. Bottom of first course shall be substrate fused 4".

4. Substrate-fuse the KMM membrane at all projections.

5. Subsequent sheets shall be set in a full bed of adhesive, from the first course to the high point of the area to be waterproofed. Each course shall end lap the lower course 4" and side laps shall be 4". The top ends of each sheet of KMM membrane shall be substrate-fused and top-sealed.

6. The contractor shall thoroughly inspect the completed KMM membrane at the end of each day's work as well as before the backfilling phase.

7. To eliminate potential abrasions, breaks and punctures, it is strongly recommended that the completed KMM waterproofing system be completely covered immediately, with a ⅛" minimum thickness protective board. It should then be permanently backfilled, tamping the backfill as required. Protective board can be installed in KMM Adhesive.

8. Any KMM waterproofing membrane left exposed after backfilling shall be protected with KMM Aluminum membrane or other suitable sunlight-protective materials.

9. When any portion of the membrane is to be permanently exposed, it must be covered with KMM Aluminum Flashing, Specification No. 710 for protection.



Horizontal KMM Waterproofing System No. 650

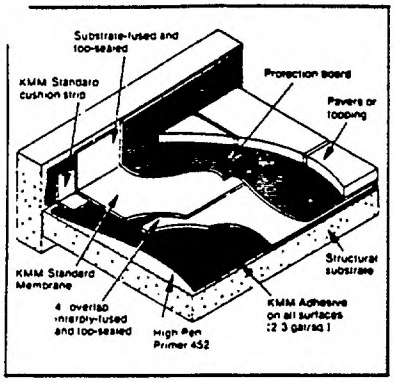

Description

Koppers Horizontal Waterproofing Specification No. 650 consists of KMM Standard membrane applied to a plaza deck or horizontal surface in a full bed of KMM Adhesive. The KMM membrane forms a waterproof system through the use of joint heat fusion, a unique process whereby all contiguous joints are affixed together to develop a monolithic waterproof membrane.

This system is applicable over any structural deck and/or approved rigid board insulation where the substrate provides continuous support for the KMM membrane. It is ideally suited for application directly to poured structural concrete decks.

Slope

Applicable for deck slopes of 0" to 4" per foot. When slope exceeds 4" per foot see Specification No. 640 on Page 35.

General Requirements

The general requirements and application procedures on the preceding page are part of this specification and must be adhered to where applicable.

Procedures

1. If cushioning strips are used, they must be applied prior to the installation of the KMM waterproofing membrane.
2. Apply adhesive at the rate of 2 to 3 gal. per square after primer has dried.
3. Starting at the low point of the deck, set the first course of KMM Standard membrane into a full bed of KMM Adhesive while the adhesive is still slightly wet. Rub and/or brush thoroughly to obtain proper adhesion and to remove all entrapped air from under the membrane. End and side laps shall be 4". All end and side laps shall be interply-fused and top-sealed.
4. Substrate-fuse the KMM membrane at all projections.
5. Subsequent sheets shall be set in a full bed of adhesive, from the first course to the high point of the area to be waterproofed. Side laps and end laps shall be 4".
6. Extend the KMM waterproofing membrane, as flashing, up vertical surfaces to a height above the water level expected at the wearing slab. The top of the KMM membrane shall be substrate-fused and top-sealed to the wall. All side laps shall be interply-fused and top-sealed. When vertical waterproofing is required, continue the upturn a minimum of 6" above the height of the wearing surface and substrate-fuse to the wall. Vertical waterproofing membrane shall overlap upturn 4".
7. The contractor shall thoroughly inspect completed KMM membrane at the end of each day's work as well as before application of protective board.
8. Proceed with application of the remaining phase of the horizontal system. Care must be taken to eliminate any puncture or damage of the KMM waterproofing membrane system by other trades.
9. It is required that a suitable protective layer be placed over the entire membrane on both horizontal and vertical surfaces to provide puncture resistance during construction and during placement of the wearing surface as soon as possible.
10. When any portion of the membrane is to be permanently exposed, it must be covered with KMM Aluminum Flashing, Specification #710 for protection.

Liquid and Mastic Applied Waterproofing and Dampproofing Systems

Hydroshield Mastic 451 All-weather cold process mastic membrane system

Hydroshield Mastic 451 is a solvent based asphalt mastic which is unaffected by immersion in water either before or after curing. It will adhere tightly to damp or even wet surfaces. Hydroshield is not damaged by soil alkilinity, acidity or minerals. This unique mastic may be applied under an extreme range of weather and temperature conditions.

Hydroshield Mastic for Dampproofing. When applied to masonry or concrete construction, Hydroshield Mastic serves as an effective dampproofing barrier to prevent the entrance of moisture by capillarity. Usually only one coat is necessary for dampproofing. Hydroshield Mastic goes on cold and may be applied to a wet or dry surface.

Hydroshield Mastic for Waterproofing. When a permanent vapor barrier to prevent the entrance of water under a head of pressure is required, Hydroshield Mastic, combined with Koppers Heavy Duty Glass Fiber Mesh, produces a tough, durable waterproofing membrane that cannot rot or deteriorate at sub-grade levels. For details of waterproofing applications, consult your Koppers representative.

Application Guide

	452 Primer Per 100 ft.² (When Needed)	Hydroshield First Coat Per 100 ft.²	Koppers Heavy Duty Glass	Hydroshield Top Coat Per 100 ft.²
Dampproofing	¼ to ½ gal.	2 gal.	None	None
Waterproofing	¼ to ½ gal.	5 gal.	1 or more plies	3 gal.

Liquid Asphalt 480 A cold applied asphalt emulsion dampproofing.

Liquid Asphalt 480 is a filled, cold-applied, high-quality asphalt emulsion containing Bentonite clay.

It is applied to masonry or concrete construction. Liquid Asphalt 480 serves as an effective dampproofing barrier to help prevent the entrance of moisture by capillarity. Usually two coats are necessary for dampproofing.

Liquid Asphalt 480 goes on cold and may be applied to a wet or dry surface. For detailed specifications consult your Koppers representative.

Application Guide

	452 Primer Per 100 ft.²	Liquid Asphalt 480 Per 100 ft.² (2 coats)
Dampproofing	¼ to ½ gal.	3 gal.

ROOF INSULATION
EXELTHERM XTRA® Insulation
The thermally efficent roof insulation with fire resistant properties

General Description

Exeltherm Xtra Roof Insulation is a closed cell thermoset phenolic base foam. Compared to other type foams used in the construction of roofing systems, Exeltherm Xtra demonstrates superior physical characteristics, exceptional fire resistance with minimal smoke development.

The following information is provided to specifiers and purchasers in order to assist them in utilizing this product in a proven and recommended manner. If additional information is required or special assistance is necessary, contact the Koppers regional office closest to you. Their locations are listed on the back page of this manual.

Typical Physical Properties		Test Method
Compressive strength 10% consolidation, psi	25	ASTM D 1621
Water vapor permeability, perm inches	8.19	ASTM C 355
Dimensional stability (7 days 158° F/95% R.H.), %	< 1.0 (length) < 1.0 (width) < 1.0 (thickness)	ASTM D 2126-75
Thermal conductivity (k-value)	0.12	ASTM C 518
Water absorption, increase by volume (two-hour immersion), %	1.8	ASTM C 272
Density lb/ft.³ (nominal)	2.4 min.	ASTM D 1622
Coefficient of linear thermal expansion, per °F	13×10^{-6}	ASTM D 696
Fire resistance (3" thickness bare foam)		ASTM E 84
Flame spread	20-25	
Smoke development	5-15	

The physical properties listed above are presented as typical average values as determined by accepted test methods and are subject to normal manufacturing variations. This data is offered as a service to our customers and are subject to change without notice. All information can be confirmed by contacting the Koppers Regional Sales Office near you.

Thermal Performance

One of the most important features of any insulation product is its ability to retain its thermal characteristics for an extended period of time. Several factors such as moisture and water soaking can affect the performance of a product during its life. The roof insulation industry through the efforts of the Thermal Insulation Manufacturers Association, Roof Insulation Committee (RIC/TIMA), are currently evaluating methods and procedures for determining long-term insulation value. However, until such procedures are proven, Koppers continues to support and follow the ASTM C 518 test method of determining thermal values; after samples have been conditioned in accordance with the RIC/TIMA method as described in their Bulletin 281-1.

RIC TIMA
THERMAL CONDITIONING PROCEDURE CERTIFICATION

The data presented for Exeltherm Xtra in the following chart has been determined by the procedure described above. For comparison purposes this chart offers data on various types of foamed roof insulation. The data presented on these products is based on ASHRAE's recommendation that aged urethane be calculated using a k-value of .16. Koppers along with the rest of the insulation industry is striving to remain current with state of the art procedure, at the same time continuing to investigate new procedures in order to provide our customers with the most accurate product data.

"Aged" Thermal Value Comparison (inches)

"C" Value	"R" Value	*Exeltherm Xtra	**Urethane Perlite Composite	**Urethane	Isocyanurate	*** Polystyrene (EPS)
0.1000	10.00	1.2	2.0	1.6	1.6	2.6
0.0857	11.67	1.4	2.2	1.8	1.8	3.1
0.0800	12.50	1.5	2.4	2.0	2.0	3.3
0.0686	14.58	1.75	2.7	2.3	2.3	3.8
0.0600	16.67	2.0	3.1	2.7	2.7	4.3
0.0500	20.00	2.4	3.6	3.2	3.2	5.2
0.0400	25.00	3.0	4.4	4.0	4.0	6.5

*The thermal value was determined by ASTM-C518. All test specimens were conditioned in accordance with the procedure as outlined in the RIC/TIMA Bulletin 281-1. **Exeltherm Xtra thermal calculations are based on a k-value of 0.12**

**In the ASHRAE Handbook of Fundamentals 1981, a "k" value of .16 has been established for rigid urethane foams.

***Values based on thermal conductivity (k) of 0.26 at 75°F mean test temperature for nominal 1.0 pcf density EPS.

Product Compliance

Exeltherm Xtra Roof Insulation meets the following requirements:

F.M. Approvals: Class I Insulated Steel Roof Deck Construction with both I-60 and I-90 Windstorm Classifications.

U.L. Classifications:

Insulated Metal Deck Construction Assemblies, Construction Numbers 120 and 123.

(2) UL Class A Roofing Covering with Coal Tar Built-Up Roof.

(3) UL Class A with Asphalt Built-Up Roof.

(4) UL Class A with KMM Standard.

(5) UL Class A with KMM Aluminum.

Federal Specification: Exeltherm Xtra is a phenolic foam insulation board with physical properties which meet or exceed performance criteria in Federal Specification HH-I-1972, a specification covering polyurethane or isocyanurate roof insulation.

BOCA Building Code: Exeltherm Xtra must be installed in accordance with Koppers Company instructions.

Must be separated from interior of building by minimum 1/2" plywood sheathing in accordance with Section 1319.3.5 of BOCA Basic Building Code — 1981 Edition and 1983 Supplement.

Uniform Building Code: ICBO — Research Report #4066 — Exeltherm Xtra installed over wood decks with fire retardant roof classification, when installed in accordance with Research Report #3844.

Research Report #4066 — Exeltherm Xtra installed on steel decks applied with hot asphalt or mechanical fasteners, in accordance with Koppers instructions, and covered with fire retardant roof covering complying with Research Report #3844.

Typical Exeltherm Xtra Application Requirements

This chart is offered as a reference guide to ... ate methods of proper application for ... lerm Xtra roof insulation. For specific detailed installation procedures, consult the Insulation Application section of this manual. (See note below).

These requirements are based on experience and are subject to change. To confirm the application requirements for your project, contact the Koppers Regional Office nearest you.

	Koppers Membrane Systems			Asphalt Built-Up Roofing Systems		Single-Ply Membrane Systems		
Deck Type	Coal Tar Bitumen	KMM Aluminum	KMM Standard	Reflective Aggregate	Smooth Surface / Non-Reflective	Loose Laid Ballasted	Fully Adhered	Semi-Attached
Metal	1 3	1b	1 3 4	1 3	1b	1 3 4	1c	1b
Concrete	1 2 3	3b	1 3 4	1 3	1b 3b	1 3 4	1c 3c	1b 3b
Gypsum	3a	1ab 3ab	1 3a 4	3a	3ab	1 3a 4	3ac	3ab
Wood Plank/ Plywood	1 3a	1b 3ab	1 3a 4	1 3a	1b	1 3a 4	1c	1b
Structural Wood Fiber	1 3d	1c 3ab	1 3a 4	1 3a	1b 3ab	1 3a 4	1c 3ac	1b 3ab

Methods of Attachment:
1. Mechanical Fasteners
2. Coal Tar Bitumen
3. Asphalt (ASTM D312 Type III)
4. Loose Laid

Special Application Requirements:
a. A base ply must be first nailed to the deck using the approved number and type fasteners prior to installing the insulation board.
b. An overlay board of wood fiber or perlite (1/2" min. thickness) must be installed over the Exeltherm Xtra.
c. An overlay board of wood fiber or perlite (1" min. thickness) must be installed over the Exeltherm Xtra.
d. A base ply must first be mopped to the deck using Type III asphalt prior to installing the insulation board.

NOTE: These requirements apply to the installation of Exeltherm Xtra as described above. It is also recommended that the specifier consult the ... brane manufacturer's literature and specifications in order to determine if additional requirements or restrictions apply.

Important Application Considerations

Introduction

Roof insulation plays a major part in the conservation of our nation's energy resources. As well it has become an important part of a building owner's energy saving package.

Of equal importance to an insulation's thermal performance is the product's ability to become a compatible part of the roofing assembly.

Exeltherm Xtra has been laboratory tested and field evaluated to determine its in-place performance within various roofing systems. As with any product, Exeltherm Xtra must be installed properly in order to perform as it has previously demonstrated.

The following information is offered as a guide to the proper specification and basic application of Exeltherm Xtra Roof Insulation.

If you have an unusual situation or desire further clarification of these recommendations, contact your Koppers representative through one of the offices listed on the back page of this booklet.

Roof Deck Requirements

... oof deck is the foundation for the insulation and membrane roof assembly. The success of that assembly will in part depend on the integrity of that foundation.

Although special application requirements may be required for some decks, Exeltherm Xtra can be installed over most types of roof decks in the conventional manner.

Metal roof decks shall be designed so that they will not have a deflection exceeding 1/240 of clear span under all types of loads (live & dead) when subjected to 300 lbs. concentrated on a 1 sq. ft. area at mid-span. Designer must take into account roof traffic conditions, all roof mounted mechanical equipment as well as equipment used in the application of the roof.

Koppers acceptance of any deck as satisfactory to receive Exeltherm Xtra roof insulation involves the deck surface only. It is the responsibility of the building designer and the deck manufacturer to establish the requirements for:

a. Expansion and contraction in a manner that will create a stable base for the roof insulation.
b. Support of maximum anticipated loads.
c. Acceptable deck deflection.
d. Etc.

Koppers will not assume responsibility for deck defects, bitumen drippage, or the placement of conduits, bolt heads, etc., above the roof deck.

Surface Preparation

Decks must be rigid, well attached, dry, smooth, clean, free of defects and be installed in accordance with the manufacturer's recommendations.

All projections or openings in the deck should be completed before the application of the insulation and roofing.

Insulation Stops

At all roof edges and openings, treated wood nailers shall be installed. The treatment of the wood shall be a waterborne type such as in the Wolmanized® process. The thickness of the nailer must correspond to the thickness of the insulation and be approximately 6" wide.

On decks with slopes greater than two inches per foot, wood insulation stops should be used. They should be treated with a water-based preservative and should be the same thickness as the insulation. They must be securely fastened to the deck perpendicular to the slope line of roof. The maximum spacing of the stops should be 48-1/8 inches from face to face.

Vapor Retarders

Vapor retarders are used to control the flow of water vapor from the interior of the building into the roof assembly. Vapor retarders are located between the deck and the roof insulation in roof assemblies..

The use of a vapor retarder within the roofing assembly usually depends upon: the occupancy conditions, whether the outside mean January temperature is below 40° and if the interior winter conditions are expected to be above 45% relative humidity.

Since the architects and building designers are aware of the actual conditions of the specific installation, they have the responsibility for determing if a vapor retarder should be used.

I plication of the vapor retarder should be .. accordance with the recommendations of the manufacturer of the vapor retarder specified and be compatible with Koppers installation and attachment requirements.

When FM Class I construction requires a vapor retarder it must be an FM approved vapor retarder system installed in accordance with FM Loss Prevention Data Sheet 1-28.

Insulation Application

Built-up roofing and fully-adhered single-ply systems require maximum adhesion of the roof insulation to assure optimum membrane performance. Roof insulation as well can be exposed to unusual stress or even damaged when poorly or partially attached.

Good attachment is a *must* for success. Koppers will not be responsible for any damage caused by or the result of unsatisfactory attachment.

• MECHANICAL ATTACHMENT

Insulation by mechanical fastening is the recommended method of attachment whenever possible. In 1984 Factory Mutual will require total mechanical fastening for steel deck construction.

Exeltherm Xtra currently requires a minimum of 4 fasteners per 3' x 4' board (3 sq. ft./fastener) for an FM I-60 approval and a m· im of 5 fasteners per 3' x 4' board (2.4 ; astener) for an I-90 approval.

Exeltherm Xtra insulation board with a 4' x 8' dimension must be installed using 11 fasteners per board for FM I-60 approval or 14 fasteners per board for FM I-90 approval.

All fasteners must be FM approved and installed as prescribed by FM. The placement of the fasteners must be as illustrated below.

Factory Mutual I-90

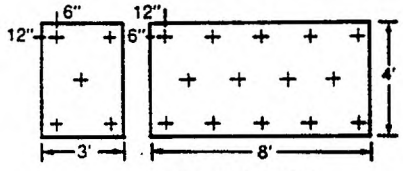

Factory Mutual I-60

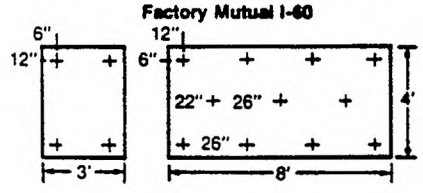

Special Note:

It h 'ong been recognized that the broader me ne temperature changes experienced 'ith .mooth and/or non-reflective surfaces an sometimes create stress within the roofing assembly which can cause premature roof problems, particularly if any one or more components of the system is poorly installed. To avoid potential problems, when a smooth surface and/or non-reflective roof is specified, Exeltherm Xtra must be mechanically fastened in the required manner to the deck.

(Also see the membrane application section of this manual.)

• BITUMEN ATTACHMENT

When mechanical fastening is not preferred or is not practical, such as on concrete decks, hot applied coal tar or asphalt may be used. When using asphalt on concrete decks priming is usually necessary. When using hot applied bitumen for attachment, care must be taken to apply the material in sufficient quantity to totally cover the available deck surface.

The temperature of the bitumen is import[illegible]t must be hot enough at the moment the board is installed to allow TOTAL embedment of the board. To assure total embedment the board must also be stepped on at several points.

It is recommended that attachment be checked from time to time by removing and inspecting a recently installed board.

Cold adhesives are not acceptable for the installation of Exeltherm Xtra.

• LOOSE LAID APPLICATIONS

Manufacturers of certain loose laid and ballasted single-ply membrane systems allow the insulation to be installed without attachment.

Under such conditions Exeltherm Xtra may be installed without attachment; however, all other recommendations specified in this manual must be followed.

Whether attached by mechanical fastening, hot bitumen or loose laid the insulation board shall be installed in parallel courses, butted firmly, with the cross joints broken.

On metal decks the long dimension of the board shall run parallel to, with the edge resting firmly on the top of, a flute.

When possible the insulation boards should be laid perpendicular to the direction of the roof membrane.

As the insulation is being installed and checked for proper attachment the roofing membrane application must closely follow.

Roof Membrane Application

No more insulation is to be installed than can be covered by the **COMPLETED** roofing system in the same day. Experience indicates and most manufacturers require that when gravel surfacing is specified it should also be applied at the same time the membrane is installed.

Koppers does not recommend the practice of phase construction.

At the completion of each day's work all exposed edges of the uncompleted insulated roof membrane system must be sealed by means of a temporary water cut-off. It is extremely important that moisture not be allowed to enter the completed system. To avoid localizing conditions within the insulation chamber all temporary water cut-offs must be totally removed when the application continues.

Install the roofing system in strict accordance with the manufacturer's specifications and recommendations.

SPECIAL REQUIREMENTS

BUILT-UP ROOFING SYSTEMS

• Gravel Surfaced Membranes:
The application of Exeltherm Xtra requires no special installation provisions. Install the membrane in strict accordance with the manufacturer's published specifications.

• Smooth and/or Non-Reflective Membranes:
With the exception of applications noted on the Typical Application Requirements Chart presented on page 38 of this manual, Exeltherm Xtra must be mechanically fastened to the deck and overlaid with a minimum of 1/2" fiber, perlite or equivalent insulation board. The overlay must be attached either by mechanical fastening or hot bitumen. Install the membrane in strict accordance with the manufacturer's published specifications.

SINGLE-PLY ROOFING SYSTEMS

• Loose Laid Ballasted Membrane Systems:
Exeltherm Xtra can be attached either by mechanical fastening, hot bitumen or loose laid as may be required. Install the membrane in strict accordance with the membrane manufacturer's published specifications.

• Semi-Attached Membrane Systems:
With the exception of applications noted on the Typical Application Requirements Chart presented on page 38 of this manual, Exeltherm Xtra must be mechanically fastened in the required manner to the deck and overlaid with a minimum of 1/2" fiber, perlite or equivalent insulation board. The overlay may be mechanically fastened, set in hot bitumen or laid loose if permitted.

Install the membrane in strict accordance with the membrane manufacturer's published specifications.

• Fully Adhered Membrane Systems:
With the exception of applications noted on the Typical Application Requirements Chart presented on page 38 of this manual, Exeltherm Xtra must be mechanically fastened to the deck and overlaid with a minimum of 1" fiber, perlite or equivalent insulation board. Due to the unique characteristics of these type systems special application procedures are often required. When specifying Exeltherm Xtra along with a fully adhered single-ply system consult your Koppers representative for special application requirements.

Temporary Roofs

The application of an insulated roof membrane system prior to the building structure being ready to accept the system has been recognized as a major cause of premature roof failure. All work, such as vent pipes, nailers, curbs, perimeter wall, drains, etc., must be in place prior to the installation of the insulated roofing system.

If such work cannot be completed prior to the need for weather protection, Koppers recommends a temporary roofing system which can be removed and replaced by the

permanent system when the structure is ready. No roof insulation should be applied until the permanent roofing system is installed.

eroofing

When reroofing, complete removal of the old roof membrane and insulation is the preferred procedure. This allows the deck to be checked for structure integrity and a new insulated roof assembly to be installed in accordance with state of the art standards.

When it is not possible to remove the old roofing system, certain factors must be considered.

- All existing insulation must be dry, well attached and structurally sound.
- The existing roof membrane must also be dry, smooth and well attached.

Any, wet and/or damaged areas must be removed and replaced with material of equal thickness, leaving a level substrate to receive the new insulation.

For greater assurance it is recommended, when possible, that the new layer of insulation be mechanically fastened. When attaching the new insulation to the existing roof or insulation with hot bitumen, extreme care must be taken that a sufficient quantity of bitumen is used in order to obtain total adhesion of the new board.

Precautions

Protection of Material

Keeping insulation dry and undamaged is essential to assure maximum thermal and structural performance of the roofing insulation membrane assembly.

Exeltherm Xtra is shipped covered with plastic shrouds which are intended to temporarily protect the material while in transit. Due to the potential of moisture condensing on the inside of the plastic surface on cool humid mornings causing moisture build-up on the edges of the insulation boards in contact with the plastic, it is recommended that the shrouds be removed during storage at the job site and the material be covered with a breathable type weatherproof covering such as tarpaulins.

Exeltherm Xtra roof insulation must be protected from the weather at all times. No more insulation should be laid than can be completely covered with roofing membrane system the same day. At the end of each day's work, or in the event work is stopped abruptly, temporary watertight cut-offs must be installed at all exposed insulation edges. Cut-offs must be removed when work is started again.

Roof insulation which has become wet and/or damaged must be removed and replaced by solid dry insulation.

Cold Weather Application

Roofing systems installed at temperatures below 45°F require special precautions to insure satisfactory performance of the finished roof.

The deck surface must be dry and free from all traces of ice, snow and moisture before applying roof insulation. Any moisture present on the deck at the time the roof insulation is applied may result in poor adhesion of materials to the deck and blistering of the membrane.

Although mechanical fastening is the preferred method of attachment, if hot bitumens are used it is recommended that their point of application temperatures be not less than 375°F for coal tar bitumens; and 425°F for steep asphalt. Special insulated equipment is often required during cold weather conditions in order to assure these point of application temperatures without exceeding the bitumen manufacturer's maximum heat limitations.

Special Applications

Due to the lack of application experience Koppers does not at this time recommend the use of its Exeltherm Xtra roof insulation in cold storage, plaza deck or vertical and horizontal subgrade waterproofing applications.

Health & Safety Issues

Exeltherm Xtra has not only exhibited excellent thermal values, fire resistance properties and high dimensional stability, but it has also been tested for toxicity, mutagenicity and combustion product toxicity. It has been shown to have a very limited potential for adverse health effects. Exeltherm Xtra has demonstrated no short term health effects except for the dust generated during cutting of the board which may cause eye irritation. Based on acute toxicity tests done according to protocols developed by the Consumer Product Safety Commission in the Federal Hazardous Substances Act (FHSA), a powder made from the board resin is less than "toxic" (FHSA definition) by ingestion or skin penetration and does not cause skin irritation. The powder from the board resin also gave negative results in the bacterial mutagenicity assay, the Ames test, i.e. no genetic effects were observed in this test. Under flaming and non-flaming conditions, this insulation is "no more toxic than wood" (Douglas fir-standard) based on the results of a combustion toxicity test developed by the National Bureau of Standards.



Additional Product Information

	3' x 4' insulation boards			4' x 8' insulation boards			
Nominal thickness (inches)	Pieces per pallet	Sq. ft. per pallet	Approx. Weight lbs. Per Sq. Ft.	Pieces per pallet	Sq. ft. per pallet	Approx. Weight lbs. Per Sq. Ft.	*Flute spanability (inches)
1.2	72	864	0.42#	72	2304	0.42#	1.75
1.4	64	768	0.48	64	2048	0.48	1.75
1.5	60	720	0.50	60	1920	0.50	1.75
1.75	48	576	0.56	48	1536	0.56	2.75
2.0	42	504	0.62	44	1408	0.62	2.75
2.4	36	432	0.72	36	1152	0.72	2.75
3.0	28	336	0.88	28	896	0.88	2.75

*For flute spans greater than 2.75 inches special provisions may be necessary. For specific information consult your Koppers representative.

REINFORCEMENT FABRICS

The extra strength needed for all roofing and waterproofing systems.



Reinforcement Fabrics are necessary for waterproofing and roofing systems because the waterproofing agents (bitumens) have practically no strength by themselves. Koppers Reinforcement Fabrics provide this extra strength in a manner similar to that of reinforcing rods in concrete. Sometimes called membranes, these fabrics serve as mechanical reinforcement for hot or cold applied bituminous coatings in roofing and waterproofing systems. They also provide the framework to build up coating thicknesses, achieving longer lasting waterproofing systems. Once applied, they form stress-resistant pliable sheets that withstand strains caused by wind, vibration, and expansion or contraction due to temperature changes.

A complete range of reinforcement fabrics is available from Koppers:

Koppers Asphalt Or Coal Tar Saturated Cotton Fabrics are available in both standard and specification grade. The primary difference between the two grades is weight. Cotton Fabric has the longest successful application record. Specification grade cotton complies with specifications from the federal government, the American Society for Testing Materials (ASTM), the American Railroad and Engineering Association (AREA) and the American Association of State Highway Officials (AASHO).

Glasfab® and Glascoat® Woven Glass Fabrics are both well-known and widely accepted in the construction industry. Glasfab, an asphalt or tar coated fabric, and Glascoat, a white resin-coated fabric are inorganic woven glass membranes which will not rot, are lightweight and will conform to irregular surfaces. The tensile strength of glass fabric is greater than cotton fabric or jute.

Koppers Jute (Burlap) Fabric is asphalt saturated. Commonly known as treated burlap, it is a coarse fabric which tends to hold more bituminous roof coating material, resulting in a heavier build-up of coating in fewer applications. It is quite often specified for roofing and waterproofing. Jute is also used for protection of newly seeded areas, embankment erosion control and ditch liners for holding planted materials in place until growth starts.

Koppers Glass Mats are widely used with cold-applied roofing products. They are non-shrinking, possess excellent embedment qualities and conform to irregular surfaces.

The U.F. Glass Mat is white, lightweight, comprised of fine glass filaments in a random swirl arrangement, reinforced with glass strands at the edges and bonded with polymeric resin. An asphalt coated U.F. Mat is also available.

Standard Glass Fiber Mesh consists of chopped monofilaments formed into a random pattern and bonded with a resinous binder.

Heavy Duty Glass Fiber Mesh is constructed of heavy glass yarn, chopped in two inch lengths and formed into a jackstraw pattern. It is bonded and coated with a pliable asphalt. The open pattern permits excellent bleed-through of the asphalt into which it is embedded.

The perfect material for every application.

Applications of Koppers Reinforcement Fabrics are extensive, most used in conjunction with hot or cold applied bituminous coatings in roofing and waterproofing.

Other applications include bridge deck waterproofing and flashings, foundations, slabs, tunnels, subways, pipeline wrapping, pipeline joint wrap, parapet wall treatment, asphalt paving repair and protection, driveways, parking areas and tennis courts.

Many of the reinforcement fabric systems installed over 25 years ago are still in use today. In large construction projects such as highway bridges, their applications have ensured complete protection against the moisture penetration that ultimately leads to corrosion and weakening of the structure.

Bridge Deck Waterproofing effectively protects bridge surfaces and substrates from premature deterioration. Koppers Reinforcement Fabric, used in conjunction with coal-tar coatings, repels the adverse effects of weather, salt, gasoline and oil spillage. In addition, the waterproofing prevents spalling of concrete and the corrosion of bridge reinforcing rods (caused by penetration of moisture and de-icing chemicals). The woven glass reinforcement fabric serves a function similar to that of steel mesh in concrete. Forming a stress-resistant pliable sheet, the supporting membrane adds strength and serviceability to the inherent water resistance of the coal-tar emulsion.

Foundation Waterproofing And Dampproofing at the time of construction can eliminate the problems of damaging leaks. Architects and engineers have long realized the advantages of waterproofing compounds in preventing or retarding the passage of water. Reinforcement fabric enables waterproofing compounds to remain stationary while being built-up to the specific quantities desired, thus allowing the depth of material necessary to resist existing hydrostatic pressure.

Plaza Deck Waterproofing provides subterranean structures with needed protection against moisture. Whether used as office space, classrooms, storage or a parking garage, all below-ground facilities must be watertight, including walls and top surfaces. Landscaped plazas are often constructed on these top surfaces. It is here that Glasfab is used as the reinforcing membrane in the waterproofing systems placed uder the plaza surface.

Glasfab is available with a coating of asphalt or tar, to be compatible with the specified bitumen. Possessing the highest tensile strength of any reinforcing membrane currently in use, Glasfab provides a strong waterproofing system. It strengthens and secures the waterproofing agent between slabs and on walls under the plaza deck, sealing and protecting them from water and chemical penetration. When a reinforcing membrane is required that is not coated with asphalt or tar, Koppers fills the need with Glascoat. Like Glasfab, Glascoat is a woven glass fabric, but is coated with white resin. Glass mats and cotton fabrics may be needed in specific cases. Koppers makes these products also available as waterproofing membranes.



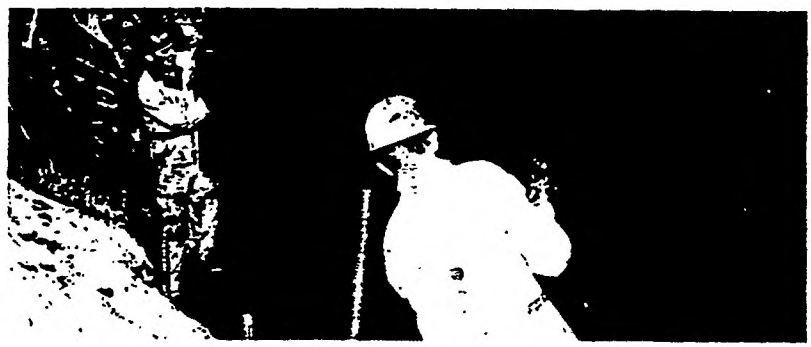

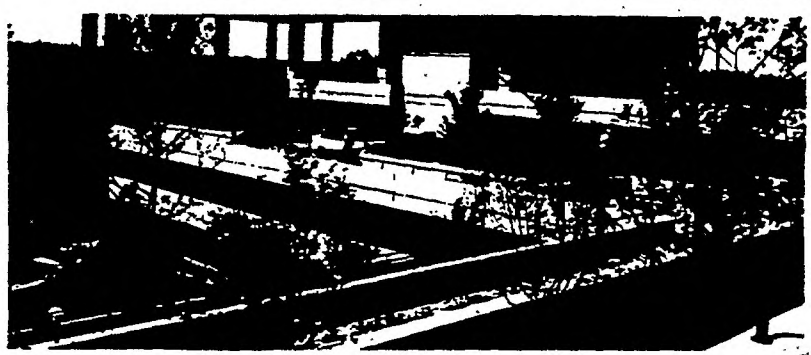

Roof Repairs are long lasting when Koppers Reinforcement Fabric is used. Quick repairs to roofing and flashing membranes are possible if a ply of fabric is embedded in the first application of roof coating. A second application then completely seals the area where blisters and cracks once appeared.

Roof Resurfacing with reinforcement fabric adds strength to existing built-up roofs. Since it is important to select the membrane that performs best with a particular coating, Koppers manufactures fabrics that can be utilized with cold-applied products or hot bitumen. Coated glass fabrics are available as well as glass mats and saturated cotton fabrics. Glass membrane's non-rotting feature, its ability to conform to irregular surfaces, and its high tensile strength make it a highly desirable reinforcement. Cotton fabric is often used for stripping-in and covering corrugated metal roofs.

When selecting the proper roof resurfacing reinforcement, it is important to also use the proper amount of coating to assure a long service life.

Other uses for Koppers Reinforcement Fabrics exist wherever waterproofing systems are required:

Tennis courts can better maintain their tight, smooth playing surfaces with applications of Glasfab membranes coated with bituminous or synthetic sealers. This waterproofing combination eliminates the recurrence of cracks, thereby preventing water from seeping under the asphalt and gradually breaking up the base.

Tunnels are effectively protected against water seepage into and through the concrete shell with Koppers Reinforcement Fabric embedded in a bituminous compound. A properly installed tunnel waterproofing system prevents rapid deterioration of reinforcing rods, heaving of concrete and the formation of icicles on the underside.

Pipeline protection has been achieved through an application consisting of a bituminous coating (Koppers Coal Tar Enamel) and a reinforcement fabric (Glasfab membranes) to successfully prevent corrosion and soil stress.

Specifications and Technical Data

Product	Applicable Specifications	Nominal Sq. Yd. Dry Weight	Sq. Yd. Saturated Wt.	Breaking Strength of Saturated Fabric	Nominal Thread Count	Coating	Color	Roll Width (150' Long) Nominal	Rolls per Carton	Carton Weights
Specification Cotton Fabric	Fed. Spec. SS-C-450A ASTM D-173-80 AREA and AASHO for various states.	3.5 oz.	10 oz. minimum	50 Warp 50 Fill Minimum	26 to 32 Warp 24 to 32 Fill	Asphalt or Tar	Black	36"	1	40#
								24"	1	26#
								18"	2	40#
								12"	3	40#
								9"	4	40#
								6"	6	40#
								4"	9	40#
								3"	12	40#
Standard Cotton Fabric	None	2.0 oz.	6.5 oz. Typical Analysis	40 Warp 20 Fill Typical Analysis	27 Warp 15 Fill Typical Analysis	Asphalt or Tar	Black	36"	1	22#
								24"	1	14#
								18"	2	22#
								12"	4	30#
								9"	4	22#
								6"	8	30#
								4"	12	30#
								3"	16	30#
Glasfab®	Fed. Spec. HH-C-466b ASTM D-1668-80 Type I & II	1.2 oz. to 2.0 oz. 1.4 oz. min.	1.5 oz. to 2.6 oz. 2 oz. to 3 oz.	75 Warp 75 Fill Minimum	20 x 10 or 20 x 20	Asphalt or Tar	Black	48"	4	48#
								36"	6	56#
								24"	8	48#
								18"	12	56#
								12"	18	56#
								9"	24	56#
								6"	36	56#
								4"	54	56#
								3"	72	56#
:oat®	White ASTM D-1668-80 Type III	1.2 oz. to 2.0 oz.	1.6 oz. to 2.6 oz.	75 Warp 75 Fill Minimum	20 x 10 or 20 x 20	Resin	White	36"	6	42#
								24"	8	37#
								18"	12	42#
								12"	18	42#
								9"	24	42#
								6"	36	42#
								4"	54	42#
								3"	72	42#
Jute	Fed. Spec. HH-B-00800 ASTM D-1327-78	7.5 oz.	9.8 minimum Typical Analysis	50 Warp 50 Fill Typical Analysis	9 Warp 9 Fill Typical Analysis	Asphalt	Black	36"	1	44#
								24"	1	28#
								18"	2	44#
								12"	3	44#
								9"	4	44#
								6"	6	44#
								4"	9	44#
								3"	12	44#

Product	Binder	Glass Weight 100 sq. ft.	Total Weight 100 sq. ft.	Tensile Strength Width	Tensile Strength Length	Roll Width (150' Long) Nominal	Rolls per Carton	Carton Weights
U.F. Mat— White	Polymeric	.9 lbs.	1.0 lbs.	4 lbs.	13 lbs.	36" x 180'	1	7#
U.F. Mat— Asphalt	Polymeric	.9 lbs.	2.5 lbs.	31 lbs.	47 lbs.	36" x 180'	1	16#
dard Mesh	Resin	1.39 lbs.	1.44 lbs.	10 lbs.	18 lbs.	36" x 180'	1	11#
Heavy Duty Mesh	Asphalt	2.22 lbs.	4.5 lbs.	25 lbs.	34 lbs.	27" x 96'	4	40#

ROOF MAINTENANCE PRODUCTS AND SYSTEMS

\ll roofs require preventive maintenance.

As soon as the roofing system is first applied, the degradation process begins. If the roof is allowed to age unattended, you may be faced with the high cost of replacing the entire roof.

The materials needed to repair or maintain the common built-up roof depends upon the construction and condition of the roof and the nature of the problem. Maintenance or repair isn't merely a matter of adding more bitumen. Each roof responds to the ravages of time and weather in different ways. Each needs specific materials to combat deterioration.

Then there are the flashings, counter-flashings, parapet walls, pitch pans, and possible wet insulation to be considered. Each of these areas is susceptible to deterioration and damage. Each requires particular materials for maintenance and repair.

Koppers has all the materials necessary to keep your roof in top condition. Our Roof Shield System, for instance, can add years of extra life to smooth surface asphalt roofs and our resaturant applications have extended the life of many built-up gravel roofs 50% or more.

Koppers Early Warning System is a program which will provide you with a complete and thorough roof-top survey determining the actual conditions throughout the roof system. \n analysis of suspect areas and all roof data is ntered into one of our many word processing computers offering uniform and comprehensive maintenance specifications tailored to your needs. Koppers will be pleased to put a preventive roof maintenance program together for you.





Roof conditions

Dry Felts & Bare Spots: are caused by the oxidation of surface bitumen on gravel roofs. Roof Felts become exposed to attack by the sun's ultra violet rays, and rapid deterioration follows. Koppers roof resaturants help avoid this situation.

Blisters: usually are formed by the presence of moisture resulting in vapor pressure that has been trapped between plies of felt on either gravel or smooth surface roofs. Koppers roof cements and membranes can solve this problem.

Alligatoring: is a condition almost universal to smooth surface hot asphalt roofs. Attack from the sun starts immediately and progresses to the formation of deep roof alligators as time goes by. The appropriate Koppers asphalt emulsions will provide a smooth top surface that will not alligator in the future.

Splits: are the result of excessive movement in the roof system. Freeze-thaw cycles and expansion and contraction may cause roof splits if proper expansion joints have not been provided. Koppers Stripshield and other systems can help control this condition.

Wet Insulation: will greatly effect the performance of any built-up roof. Hydrostatic pressure trapped within the roofing system must be released. Certain types of insulation can be successfully vented. This can help eliminate costly membrane deterioration.

Worn Flashings: can lead to a total roof failure. Koppers cements and membranes offer a system to restore worn flashings to a "like new" condition. If damage is more severe, our KMM aluminum flashing system offers an approach that will provide a completely new flashing with a durable aluminum top surface.

KOPPERS
Architectural and Construction Materials
7 1/KOP

Koppers Aluminum Roof Coatings

Asphalt base ective coatings

Koppers asphalt base aluminum coatings contain pure aluminum paste consisting of millions of tiny pigment flakes. When the coating is applied, these flakes rise to the surface and arrange themselves into many shingle-like layers of aluminum. The result is a reflective metal surface that protects the substrate from the elements. With Koppers aluminum coatings, there is no peeling or separating because the asphalt base securely bonds the aluminum to the protected surface.

There is an aluminum coating to suit your needs:

Aluminum Coating 434 contains three pounds of extra quality aluminum paste per gallon of high grade, non-fibrated asphalt base.

Aluminum Coating 435 contains three pounds of extra quality aluminum paste per gallon. This coating is reinforced with asbestos fibers for a thicker, tougher coating and extra life.

Aluminum Coating 444 contains two pounds of extra quality aluminum paste per gallon of high grade non-fibrated asphalt base.

Aluminum Coating 445 contains two pounds of extra quality aluminum paste per gallon, reinforced with asbestos fibers.

Application:

1. Preparation — The surface to be coated should be cleaned of all loose material such as gravel, dirt, dust, rust or scale. All breaks, cracks, holes and other structural deficiencies should be repaired prior to applying the Aluminum Coating.

2. Priming — Before applying Aluminum Coatings to roofs, dry or dusty felts should be primed with Koppers High-Penetration Primer 452 at the rate of approximately ¾ gallon per 100 square feet. This preliminary step insures proper adhesion of the Aluminum Coating.

3. Coating — Stir thoroughly before and occasionally during application. Apply with spray or brush.

4. Curing — Allow one month curing time before applicaton over new asphalt emulsion coated roofs. Allow three months curing time before application over new asphalt or solvent type coated roofs. Do not apply over "dead level" surfaces subject to standing water.

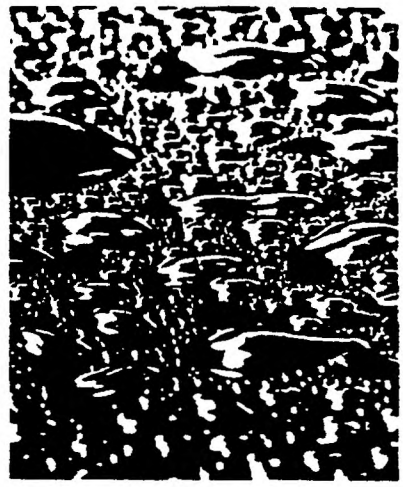

Guards against moisture penetration
The asphalt base in Koppers aluminum roof coatings provides excellent adhesion to the existing surface. The result is a reflective surface that guards the substrate against moisture penetration.

COVERING CAPACITY	Type of Surface	434 and 444 Non-Fibrated Aluminum	435 and 445 Fibrated Aluminum
(Per 100 sq. ft.)	Metal	¼ to ½ gallon	1 to 1½ gallons
	Composition	½ to 1 gallon	2 to 3 gallons

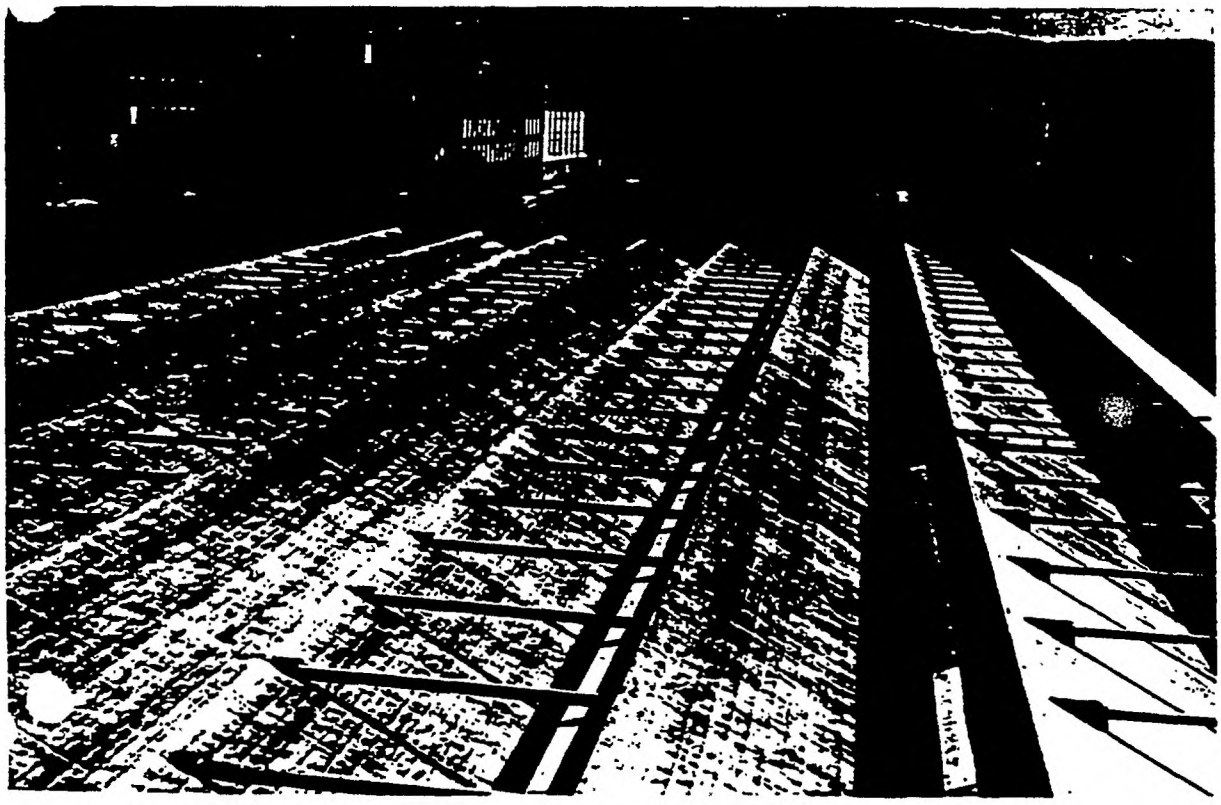

Koppers Heavy Duty Roof Shield System...

Description

Koppers Heavy Duty Roof Shield System combines two Koppers roofing materials, Heavy Duty Glass Fiber Mesh and Liquid Asphalt 480.

Liquid Asphalt 480 is a filled, cold applied, high-quality asphalt emulsion containing Bentonite clay. It is the waterproofing component of the Heavy Duty Roof Shield System. The unique gel structure of Liquid Asphalt 480 will not alligator, blister, or flow in hot weather.

Heavy Duty Glass Fiber Mesh is a patented reinforcing mat of a non-woven jackstraw pattern of short cable strands of glass fiber. Each strand is composed of more than 200 glass monofilaments and is completely surrounded with the Liquid Asphalt 480, thereby eliminating water wicking by capillarity into the waterproofed surface.



Application

1. Surface Preparation. If there is a question to the soundness of the existing roof and insulation, a core cut should be made. All minor repairs must be made prior to priming. ANY blister containing moisture must be allowed to DRY before repair is made.

2. Priming. Every effort should be made to remove dust from the surface. If the dust cannot be completely removed, Koppers High Penetration Primer #452 should be applied at the rate of approximately ¾ gallon per 100 sq. ft.

If a primer is used, it must be allowed to dry thoroughly before proceeding with Roof Shield application.

3. Flashing. Flashing areas shall be examined, repaired and primed as required. Roof Shield should be applied first to flashing areas.

4. Application. Brush or spray-on an embedding coat of Liquid Asphalt 480 at the rate of 4 gallons per 100 sq. ft. Do not apply if temperatures below 40° F. are expected within 8 hours or if rain is expected before the emulsion has time to dry.

While the emulsion is wet, embed Heavy Duty Glass Fiber Mesh into it with firm brush pressure forcing the emulsion through and around the glass strands. Each succeeding glass strip should overlap the preceding one by 2 inches. Roll ends of Heavy Duty Glass Fiber Mesh should overlap 6 inches. Do not allow dry or starved laps. Permit Liquid Asphalt 480 and Heavy Duty Glass Fiber Mesh to dry sufficiently to permit foot traffic.

After the embedding coat is dry, a top coat of Liquid Asphalt 480 is sprayed or brushed on at the rate of 3 gallons per 100 sq. ft.

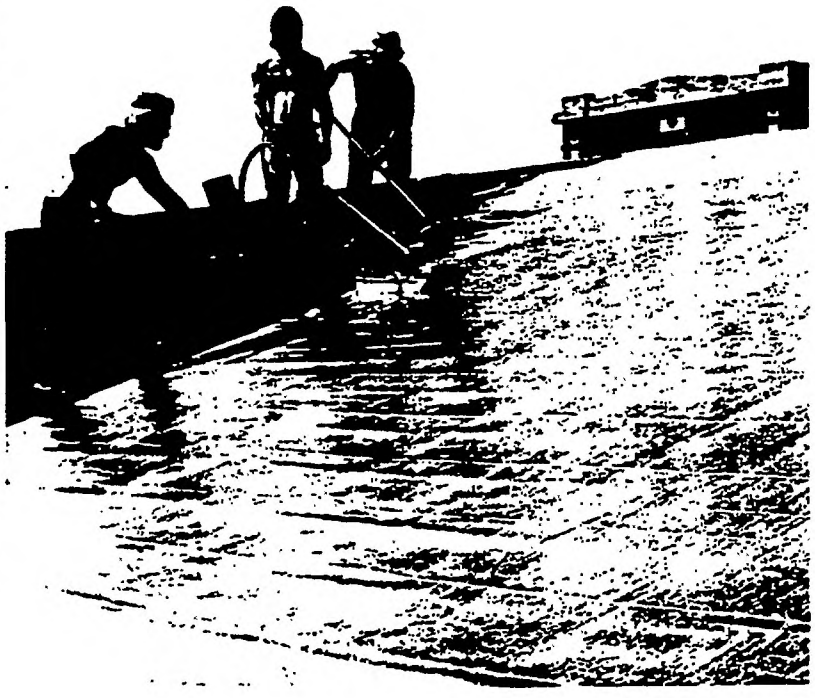

Information contained in this bulletin is presented in good faith, but it is not to be inferred that by publication hereof by Koppers Company, Inc., nor by the use or employment by the reader of any suggestions or method contained herein, that Koppers Company, Inc., has assumed any liability for infringement of any patent, foreign or domestic, nor given any warranty, expressed or implied.

ROOF MAINTENANCE PRODUCTS AND SYSTEMS

Effective Maintenance with Tar and Asphalt Roof Resaturants



- Lowers the softening point of the top pour of bitumen
- Restores flexibility to dried or otherwise brittle felt
- Adds additional waterproofing to the surface
- Provides a means of new gravel embedment

Purpose:

Many factors play a part in the [illegible] roof. Some factors are unpredictable [illegible] can definitely be controlled. [illegible] aspects of roof degradation that will [illegible] recognized path and the end result [illegible] predicted.

The normal degradation [illegible] begins at the time [illegible] understandable since [illegible] is subjected to the [illegible] atmosphere. As [illegible] exposed to these [illegible] process begins. [illegible] bitumen [illegible] penetration [illegible] subjecting to a roofing [illegible] the performance [illegible] bitumen.

Tar

Procedure

Contact a Koppers Regional Sales Office Near You

Dolomite, Alabama 35061
1825 Koppers Drive
205-744-9140

Commerce, California 90040
5005 S. Eastern Avenue
Suite 104
213-726-9566

Elmhurst, Illinois 60126
188 Industrial Drive
312-530-6800

West Orange, New Jersey 07052
Paragon Building
10 Rooney Circle
201-736-9150

Pittsburgh, Pennsylvania 15236
2280 Koppers Building
412-227-2000

Fabric Sales Office

West Hills, Ohio 43604-7093
30000 Lakeland Boulevard
216-891-7300

Roofing, Waterproofing and Insulation Systems

- Coal-Tar Built-Up Roofing
- KMMP® Membranes
- Cold-Applied Roofing
- Exoltherm Xtra® Roof Insulation
- Reinforcement Fabrics
- Roof Maintenance Products

Koppers Company, Inc.
Building Materials
Pittsburgh, Pa. 15219

KOPPERS

A Koppers Industrial and Construction Materials

OM-847-Sept. 83

Printed in U.S.A.