D-c Magnetic Controllers — For Use on Surface Vessels (Continued)

Typical Wiring Diagrams

ELEMENTARY DIAGRAM

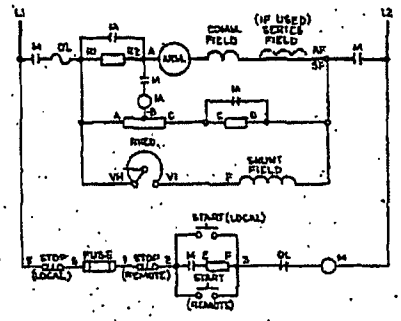

Size 1 non-reversing controller with low voltage protection and thermal overload relay, arranged for both local and remote pushbutton control.

ELEMENTARY DIAGRAM

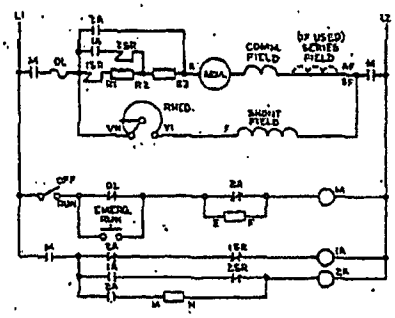

Size 2 non-reversing controller with low voltage release and thermal overload relay, arranged for local control with emergency run feature.

ELEMENTARY DIAGRAM

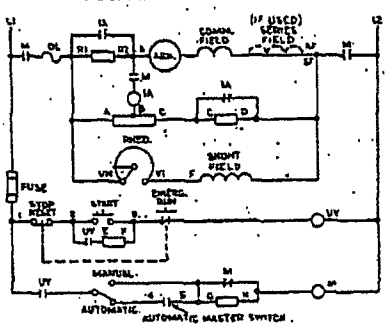

Size 1 non-reversing controller with thermal overload relay and control relay, providing LVP with two wire automatic pilot switch, selector switch and emergency run feature.

ELEMENTARY DIAGRAM

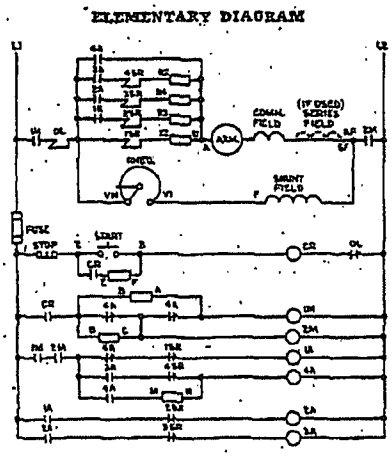

Size 6 non-reversing controller with low voltage protection and magnetic overload relay arranged for remote push-button control.

Continued

CUTLER 101/399
12/1/2006