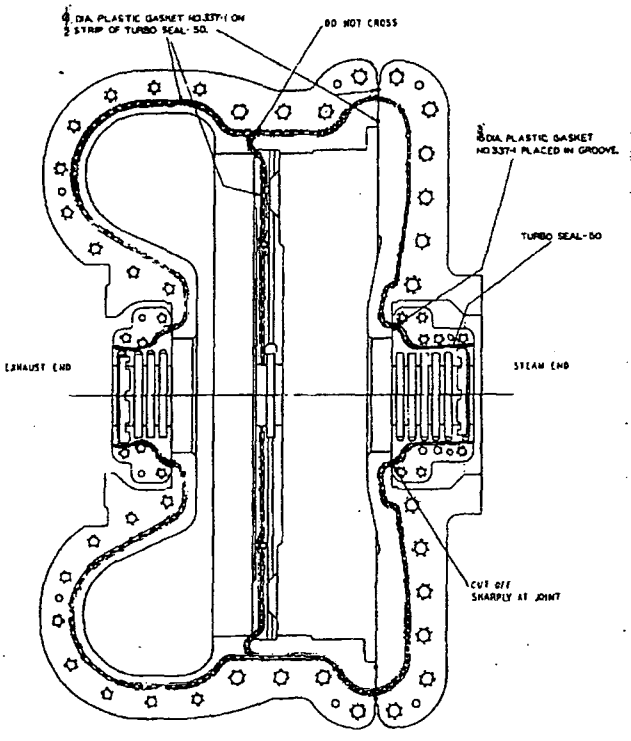

X-613115

FIG. 18—"EYR" HORIZONTAL JOINT DETAIL

lower half, and these two halves are held in correct relationship by an integral key in the lower half and a keyway in the upper half. When the diaphragm is assembled in the lower half casing, shims are placed in the casing groove to bring the diaphragm horizontal joint flush with the casing horizontal joint. The top half diaphragm is fastened into the upper half casing by locking bolts at either end of the horizontal joint. As will be noted, the diaphragm has a bored recess in its hub for carbon ring assembly (650). The construction of this carbon ring is the same as rings (512) in the packing cases. It is necessary to remove the upper half casing (502) in order to inspect or replace carbon ring assembly (650). The procedure previously outlined for removing carbon rings from the packing cases (Section II—Packing Cases and Carbon Rings) should be followed for removing carbon ring assembly (650).

The second velocity stage bucket holder (605) is fastened to diaphragm assembly (607) in the same way that the first velocity stage bucket holder (604) is fastened to nozzle ring (601).

Reference Number	*Description*	*Reference Number*	*Description*
M-1 & M-2	High Pressure Casing Drains	W	Shaft Packing Gland Sealing Steam Connections
M-3	Low Pressure Casing Drain	P	Valve Stem Leakoff
X-1 & X-2	Steam Chest Drains	V	Oil Drains
L	Shaft Packing Gland Leakoff	Y	Ring Pressure Gauge Connection
T & R	Water Cooling Connections to Bearing Cases (Ring Oiled Bearings Only)		

Note: Refer to outline drawing for connection sizes and specific locations.

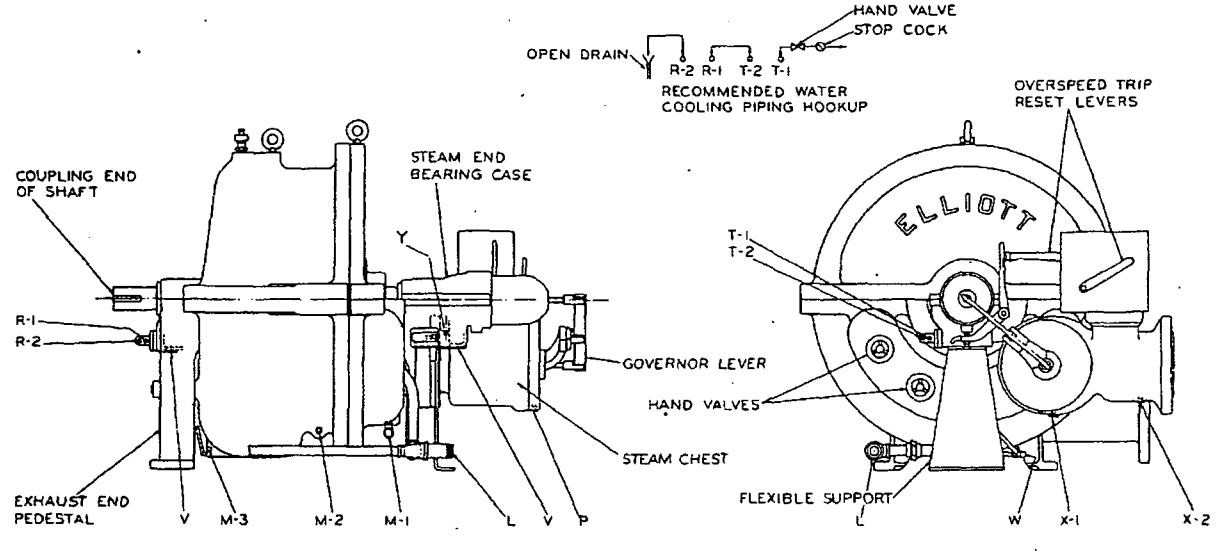

W-601470

FIG. 19—"EYR" MISCELLANEOUS PIPING CONNECTIONS

ETMC 01488