Applications

Items to be considered in the application of unit ventilators are: (1) combination with other means of heating, (2) location of units, and (3) method of venting or exhausting.

In a *split* system the unit is used primarily for ventilation. Air is delivered to the room at or slightly above room temperature, and enough radiation is installed in the room to take care of the normal heat transfer losses. Where the unit ventilator selected has a capacity more than sufficient to warm the air needed to meet the ventilating requirements, a corresponding reduction may be made in the amount of direct radiation installed. The greater the amount of excess capacity of the unit, the more efficient will be the temperature regulation of the room. The split system permits the heating of the room during failure of electric current, since the direct radiators will furnish heat, but it permits a careless operator to avoid operating the ventilating equipment.

The *combined* system employs a unit ventilator with sufficient capacity for both ventilation and the normal heat transfer losses. In such a case no direct radiation is required. It then becomes necessary for the fan to be running whenever the room is heated, but this also gives assurance of ventilation, especially if automatic dampers are used in the air intake from out-of-doors and in the recirculating intake arranged so as to give a certain quantity of air from the outside (commensurate with weather conditions) whenever the unit is operating and after the room is heated. The cost of installation of a combined system is usually less than that of a split system and there is less danger of overheating, but if the electric energy fails there will be practically no heating.

The location of the unit ventilator in a room is important. Wherever possible it should be placed against an outside wall. It is difficult to obtain proper air distribution if the unit is erected either on an inside wall or in a corner of the room. Standard units discharge the air stream upward, but for special cases units may be installed to discharge air horizontally. Units may be set away from the wall or partially recessed into the wall to save space without materially affecting the results. The air inlet may enter the cabinet at the back at any point from top to bottom.

Air Vents

The size and location of the air exhaust vent[6] outlet is important. In many cases the sizes for public buildings are regulated by law, but the location of the vents generally is left to the discretion of the engineer. See table of state codes and standards in Chapter 48.

Best results have been obtained with a velocity through the vent openings nearly equal to that at which the air is introduced into the room, thus maintaining a slight pressure in the room. Calculated velocities at the vent openings of from 600 to 800 fpm produce the best diffusion results from this system.

[6]A.S.H.V.E. Research Report No. 936—Investigation of Air Outlets in Class Room Ventilation, by G. L. Larson, D. W. Nelson and R. W. Kubasta (A.S.H.V.E. Transactions, Vol. 38, 1932, p. 463). A.S.H.V.E. Research Report No. 1017—Air Supply to Classrooms in Relation to Vent Flue Openings, by F. C. Houghten, Carl Gutberlet and M. F. Lichtenfels (A.S.H.V.E. Transactions, Vol. 41, 1935, p. 279).

The cross-sectional area of the vent flue itself may be figured on the basis of 15 sq in. of flue for each 100 cfm. Thus the vent flue area of a flue for a room equipped with one 1200 cfm unit ventilating machine would be 180 sq in. The area of vent flue opening from the room may be figured on the basis of 25 sq in. per 100 cfm.

In school buildings provided with wardrobes or cloakrooms the vents may be so located that the air shall pass through these spaces, ventilating them with air which otherwise would be passed to the outside without

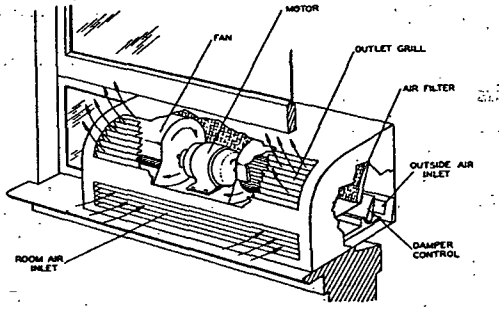

FIG. 10. TYPICAL WINDOW VENTILATOR.

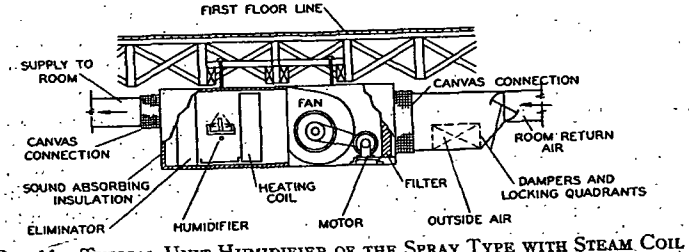

FIG. 11. TYPICAL UNIT HUMIDIFIER OF THE SPRAY TYPE WITH STEAM COIL TO PREHEAT THE AIR FOR RESIDENCES

being used to the best advantage. Many state codes for ventilation of public buildings make this arrangement mandatory.

Much controversy exists regarding the use of corridor ventilation in school building practice, one group holding the view that when each classroom has a separate vent flue there is a minimum fire risk and less likelihood of cross-contamination, while others emphasize the economy features of the corridor discharge and minimize the fire contamination, and other hazards.

WINDOW VENTILATORS

A window ventilator illustrated in Fig. 10 consists of filters and motor driven fans enclosed in a cabinet to be mounted on the window sill. These units accomplish ventilation, air cleaning, and air circulation, but have