PLAINTIFF'S EXHIBIT

USG-706

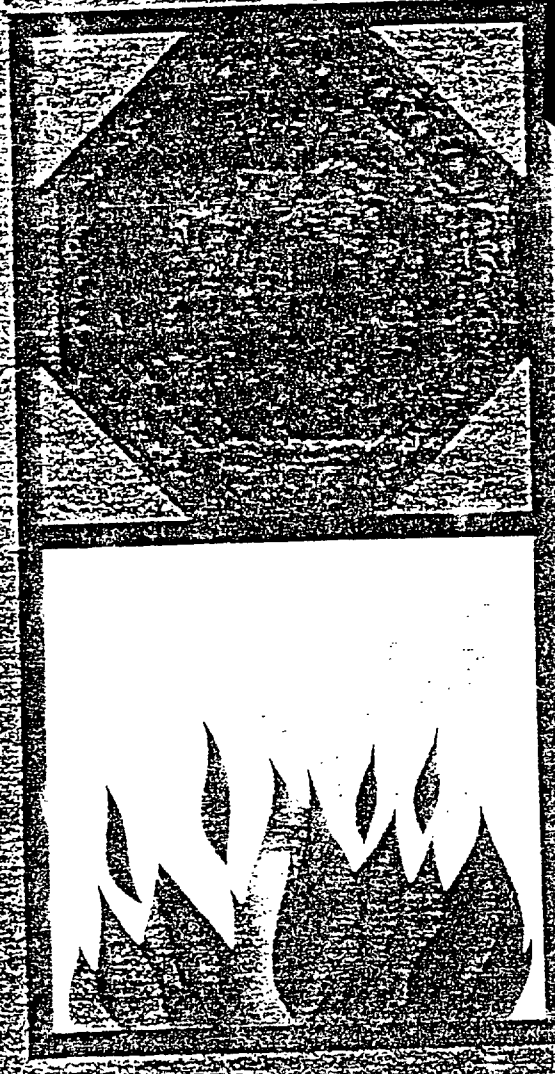

Fire-Rated Systems

BB030 1068

BB030 1069

[illegible] testing gives you the assurance of [illegible] ...

Fire-Rated Systems

No ceiling system can perform its intended function with any assurance without extensive testing of both ceiling materials and complete construction details. The results of such tests and the ratings achieved are singularly important in providing the architect with a performance yardstick for the materials and building components he specifies and uses.

It is for this reason that United States Gypsum maintains an extensive and comprehensive testing program for ceiling materials as well as for complete ceiling systems. The testing of materials results in both the improvement of existing products and the addition of new ones to the largest family of ceiling products in the industry. The testing of complete systems results in a range of fire ratings planned and designed to accommodate all the major building codes in the country.

The purpose of this brochure is to describe briefly fire-rated acoustical ceiling systems as designed and produced by United States Gypsum. It is the direct result of the most comprehensive testing program in the industry. For more detailed information on acoustical ceiling systems in general, or on fire-rated systems in particular, contact your U.S.G. Architect Service Representative. Or write United States Gypsum Company Sound Control Manager, 600 Madison Ave., New York, 3098 Piedmont Rd. NE., Atlanta, 101 South Wacker, Chicago, 525 Virgil Ave., Los Angeles.

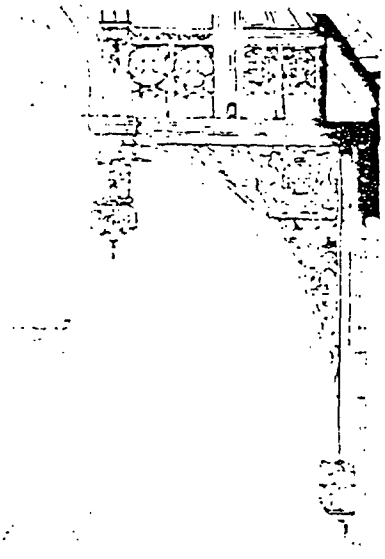

BB030 1070

Acoustone 90 Tests

Description

U.L. Design No. 15—1-Hour

ACOUSTONE* 90 Mineral Accustical Tile suspended on a standard concealed Z-spline system provides a 1-hour rating for wood joist and deck (or floor) construction.

Test Specifications

ACOUSTICAL MATERIAL: natural fissured ¾-in., 12-in. x 12-in. kerfed tile.

STRUCTURAL SYSTEM: 1-in. finish oak floor on 1-in. sub-floor supported by 2-in. x 10-in. wood joists.

SUSPENSION: concealed Z-spline system attached by clip to wood joists.

*Reg. U.S. Pat Off.

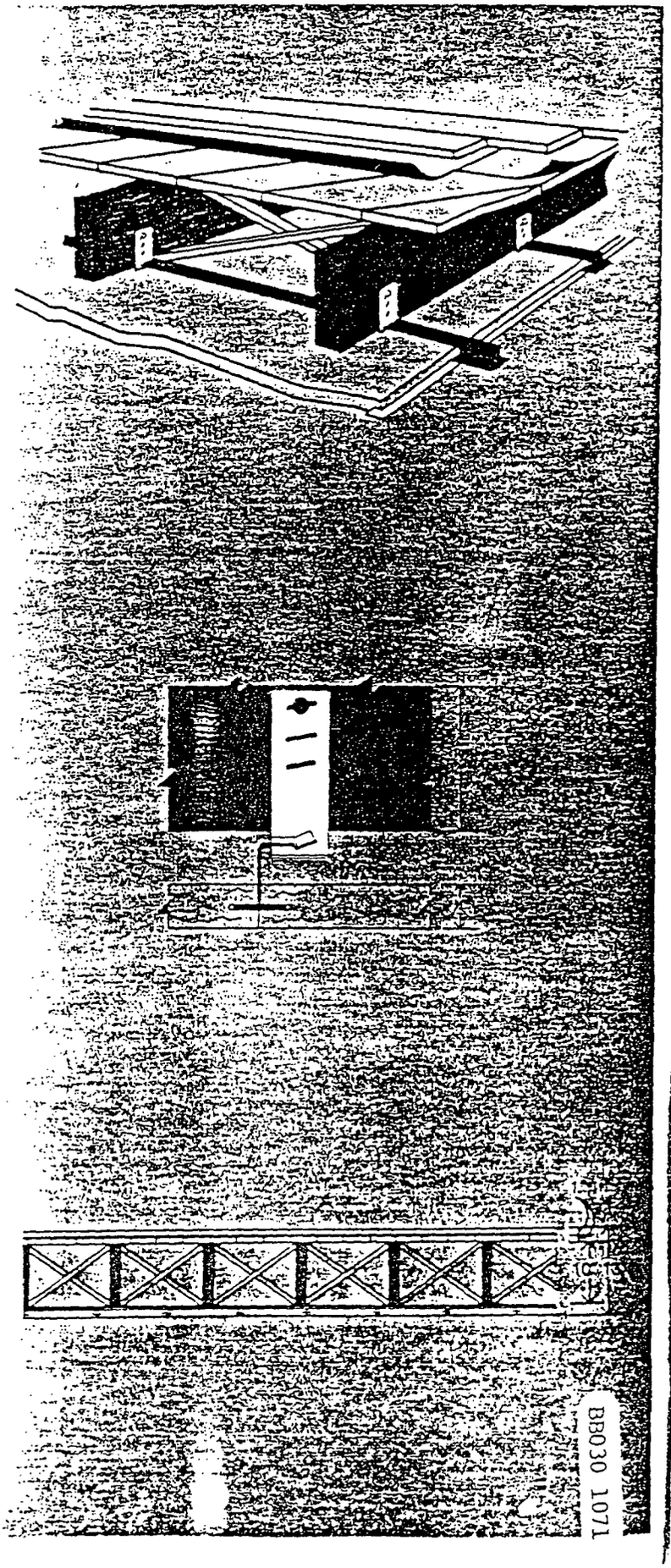

BB030 1071

Description

U.L. Design No. 6—1½-Hour

ACOUSTONE 90 Mineral Acoustical Tile suspended on a standard concealed Z-soline system provices a 1½-nour rating for bar joist and concrete floor (or roof) construction.

Typical Specifications

ACOUSTICAL MATERIAL: natural fissured ¾-in., 12-in. x 12-in. kerfed tile.

STRUCTURAL SYSTEM: 2-in. of reinforced concrete on metal lath supported by 10-in. steel bar joist.

SUSPENSION: concealed Z-soline system clipped to 1½-in. channels suspended from joists.

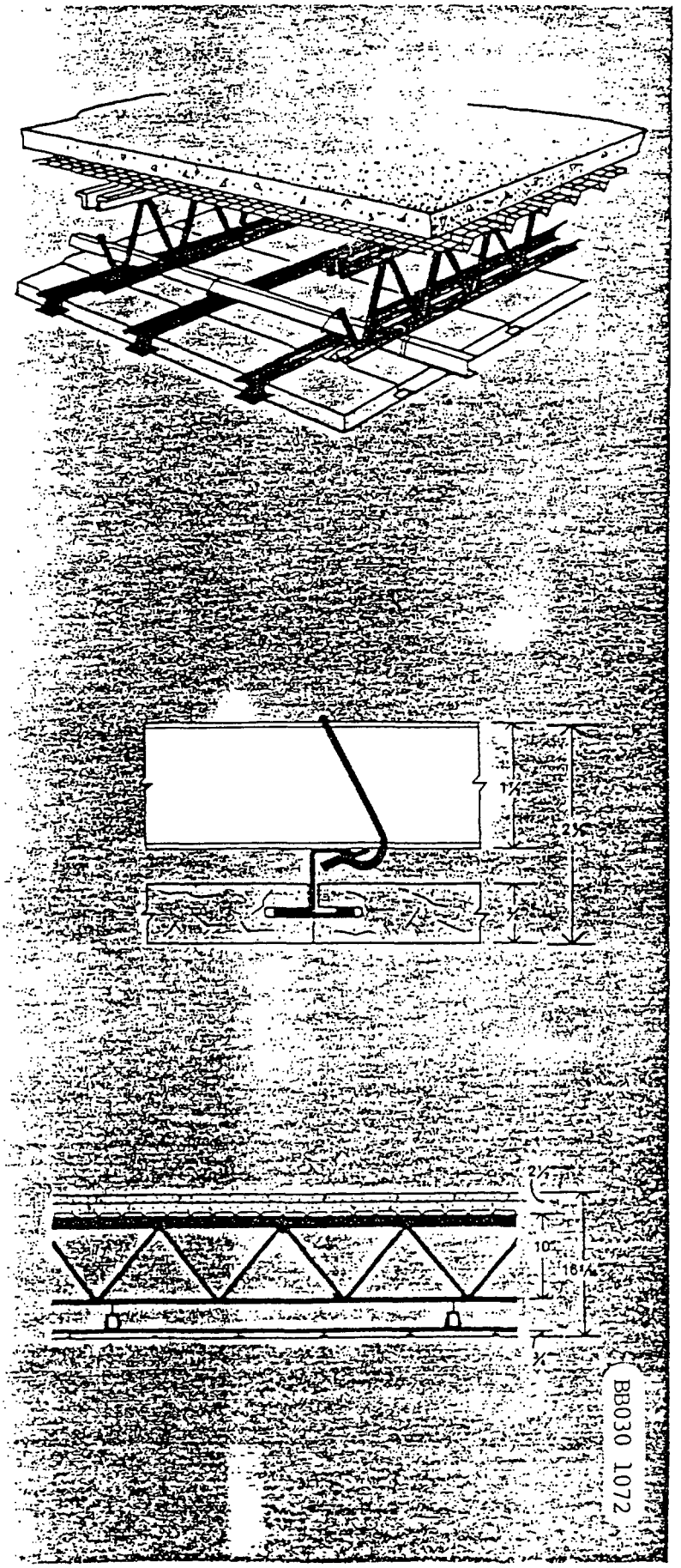

Acoustone 180 Test

U.L. Design No. 96—3-Hour

ACOUSTONE 180 Mineral Acoustical Tile suspended on a standard concealed Z-soline system provides a 3-hour rating for bar joist and concrete floor (or roof) construction.

ACOUSTICAL MATERIAL: natural fissured ¾-in., 12-in. x 12-in. kerfed tile, foil-backed.

STRUCTURAL SYSTEM: 2½-in. of reinforced concrete on metal lath supported by 10-in. steel bar joist.

SUSPENSION: concealed Z-soline system clipped to 1½-in. channels suspended from joists.

ADDITIONAL CEILING CONSTRUCTIONS COVERED:

(1) Tile may be Finesse ACOUSTONE
(2) Tile may be Glacier ACOUSTONE 120 using U.L. design No. 41—2-hour which has the same construction details as design No. 96 below.

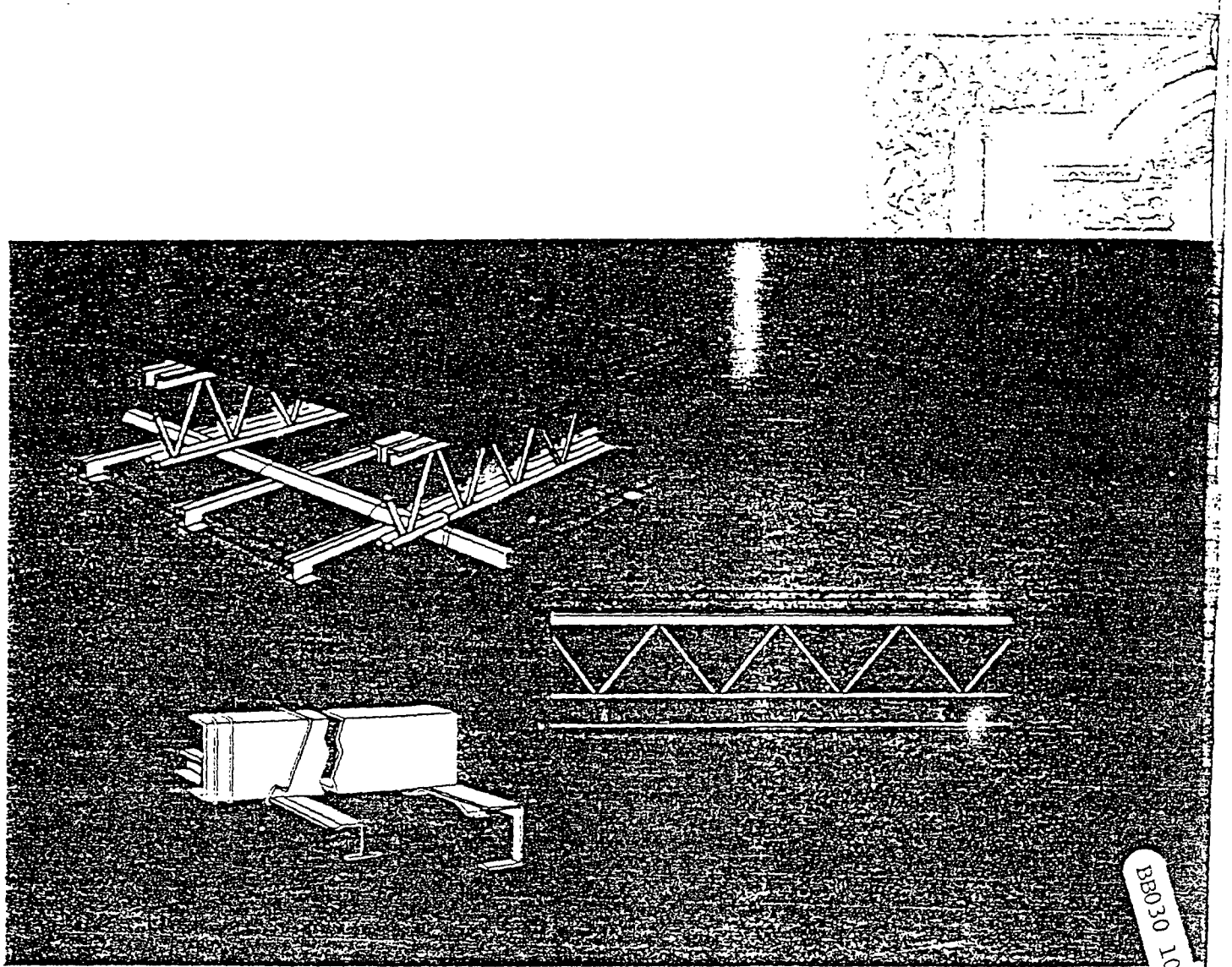

BB030 1073

Acoustone 120 Test

U.L. Design No. 85—2-Hour (2-hour beam)

ACOUSTONE 120 Mineral Acoustical Tile suspended on a standard concealed Z-soline system provides a 2-hour rating for 8-in. steel beam (also rated 2 hours) and concrete floor (or roof) construction.

Test Specifications

ACOUSTICAL MATERIAL: natural fissured ¾-in., 12-in. x 12-in. kerfed tile, foil-backed.

STRUCTURAL SYSTEM: 2½-in. reinforced concrete on 3⅛-in. metal floor units supported by 8-in. steel beam.

SUSPENSION: concealed Z-spline system clipped to 1½-in. channels suspended from floor units.

LIGHTS: 2-ft. x 4-ft. light fixtures not to exceed 20% of ceiling area. Lights protected by THERMAFIBER* Mineral Wool in field-fabricated box form.

DIFFUSERS: 110 sq. in. of diffuser opening for each 100 sq. ft. of ceiling area.

ADDITIONAL CEILING CONSTRUCTIONS COVERED:

(1) Tile may be Glacier, Finesse or a standard USG* Motif'd* ACOUSTONE pattern.

(2) Tile may be slotted for AIRSON* Air Distribution System.

50%, or less, A-5 slotted
100%, or less, A-2 slotted

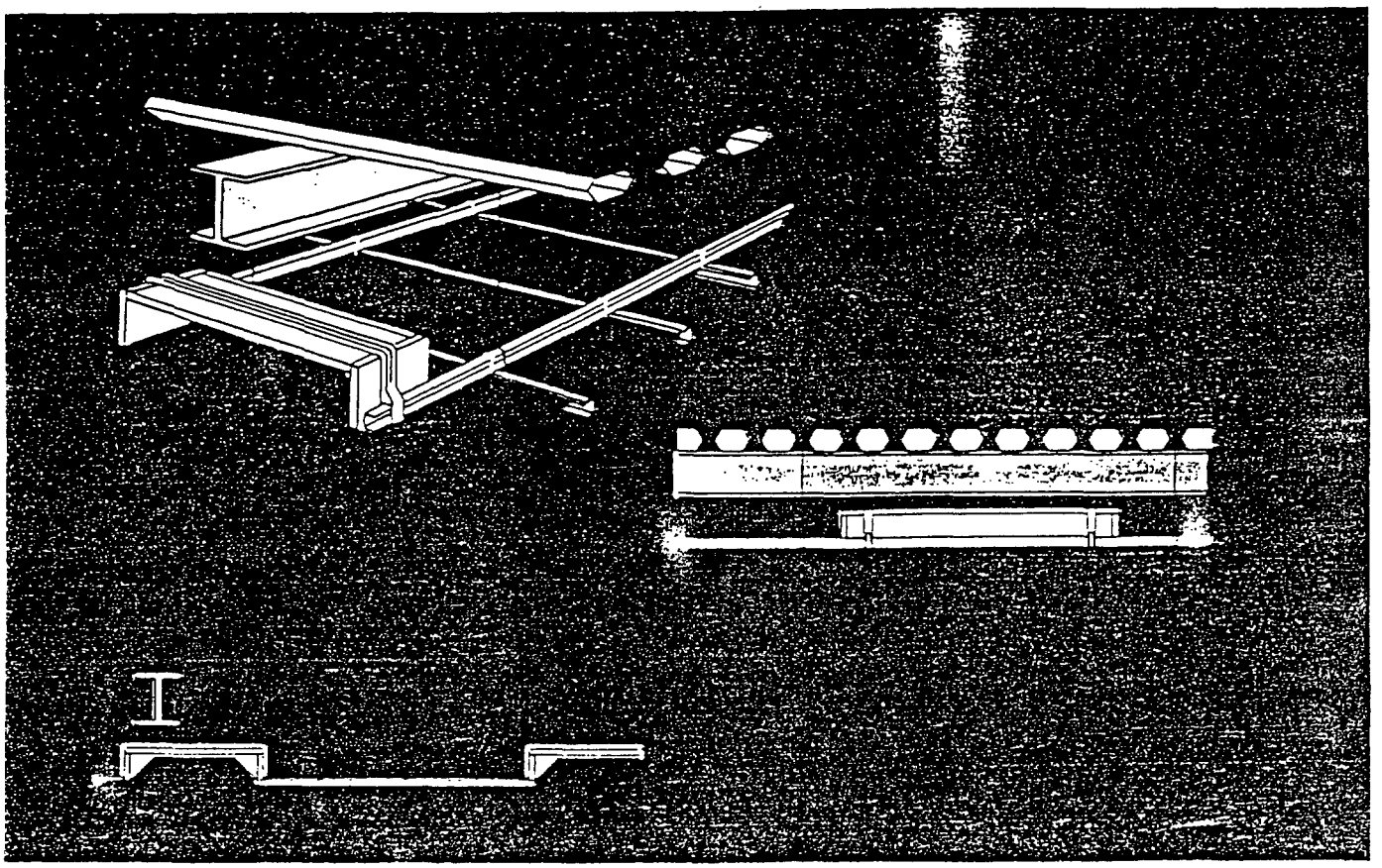

*Reg. U.S. Pat Off.

BB030 1074

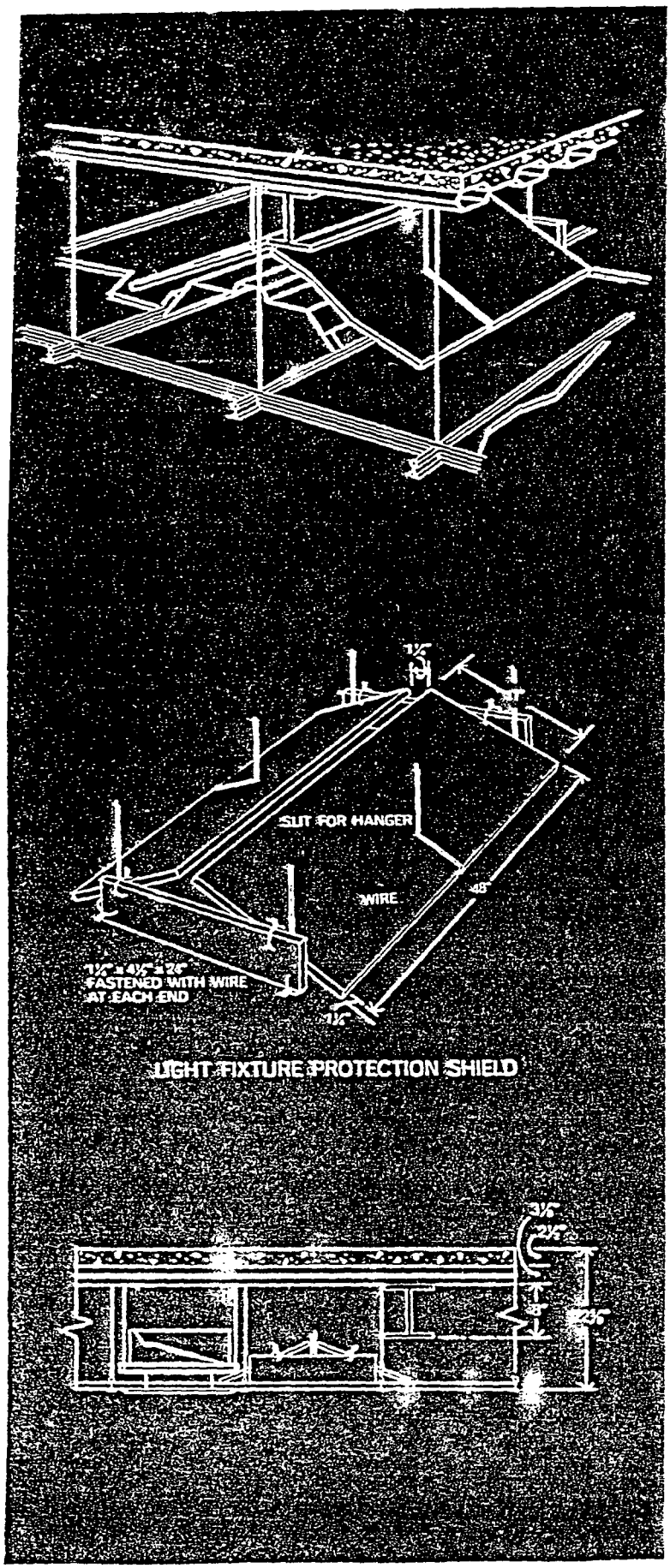

Auratone Firecode Tests

Description

U.L. Design No. 65—3-Hour (5-hour beam)

AURATONE FIRECODE* Acoustical Panels suspended on an exposed rated grid system provides 3-hour floor ceiling rating for steel beam (rated 5 hours) and concrete floor (or roof) construction.

Test Specifications

ACOUSTICAL MATERIALS: ⅝-in., 2-ft. x 4-ft. ceiling panels.

STRUCTURAL SYSTEM: 2½-in. reinforced concrete on 3⅓-in. metal floor units supported by 8-in. steel beam.

SUSPENSION: exposed grid suspension system.

LIGHTS: 2-ft. x 4-ft. light fixtures not to exceed 16⅔ of ceiling area. Lights protected by THERMAFIBER Mineral Wool in field-fabricated tent form.

DIFFUSERS: 110 sq. in. of diffuser opening for each 100 sq. ft. of ceiling area.

ADDITIONAL CEILING CONSTRUCTIONS COVERED:

1. Three AURATONE FIRECODE patterns available: Fissured, Pin Perf or Random drilled.
2. The Snowgrit finish is available on Pin Perf.
3. Panels may be slotted for AIRSON Air Distribution System.

50%, or less, A-5 slotted
100%, or less, A-8 slotted

*Reg. U.S. Pat Off.

BB030 1075

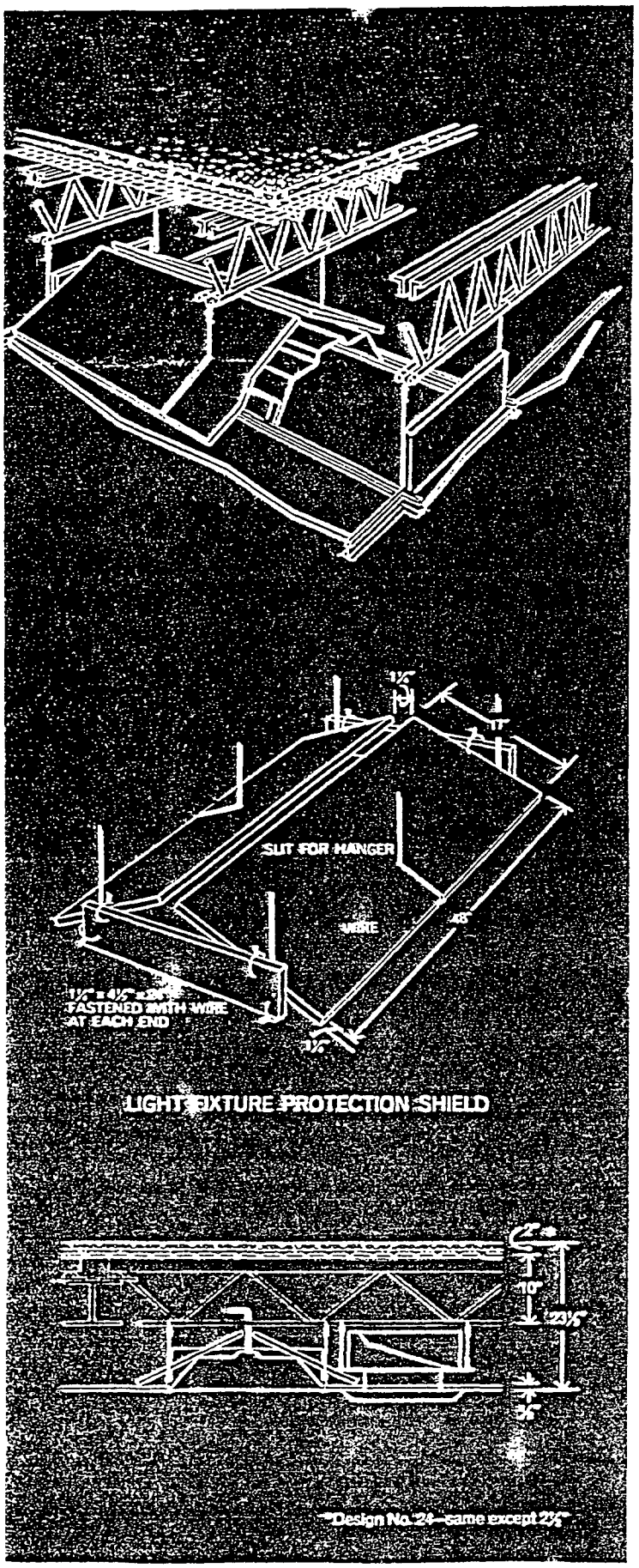

Description

U.L. Design No. 18—1½-Hour (3-hour beam)

AURATONE FIRECODE Acoustical Panels suspended on an exposed rated grid system provides 1½-hour rating for bar joist and beam (rated 3 hours) and 2-in. concrete floor (or roof) construction.

Test Specifications

ACOUSTICAL MATERIAL: ½-in., 2-ft. x 4-ft. ceiling panels.

STRUCTURAL SYSTEM: 2-in. reinforced concrete on metal lath supported by both 10-in. steel bar joist and 8-in. beam.

SUSPENSION: exposed grid system.

LIGHTS: 2-ft. x 4-ft. light fixtures not to exceed 16% of ceiling area. Lights protected by THERMAFIBER Mineral Wool in field-fabricated tent form.

DIFFUSERS: 110 sq. in. of diffuser opening for each 100 sq. ft. of ceiling area.

ADDITIONAL CEILING CONSTRUCTIONS COVERED: Three AURATONE FIRECODE patterns available: Fissured, Pin Perf and Random drilled. The Snowdrift finish is available on Pin Perf.

Description

U.L. Design No. 24—1½-Hour (3-hour beam)

AURATONE FIRECODE Acoustical Panels suspended on an exposed rated grid system provides 1½-hour rating for bar joist and beam (rated 3 hours) and 2-in. concrete floor (or roof) construction.

Test Specifications

ACOUSTICAL MATERIAL: ½-in., 2-ft. x 2-ft. ceiling panels.

STRUCTURAL SYSTEM: 2½-in. of reinforced concrete on metal lath supported by 10-in. steel bar joist and 8-in. beam.

SUSPENSION: exposed grid system.

LIGHTS: 2-ft. x 4-ft. light fixtures not to exceed 16% of ceiling area. Lights protected by THERMAFIBER Mineral Wool in field-fabricated tent form.

DIFFUSERS: 110 sq. in. of diffuser opening for each 100 sq. ft. of ceiling area.

ADDITIONAL CEILING CONSTRUCTIONS COVERED: Three AURATONE FIRECODE patterns available: Fissured, Pin Perf and Random drilled. The Snowdrift finish is available on Pin Perf.

BB030 1076

Auratone Firecode Tests

Description

U.L. Design No. 31—1-Hour

AURATONE FIRECODE Acoustical Panels suspended on an exposed rated grid system provides 1-hour rating for wood joist and deck (or floor) construction.

Test Specifications

ACOUSTICAL MATERIAL: ⅝-in., 2-ft. x 2-ft. or 2-ft. x 4-ft. ceiling panels.

STRUCTURAL SYSTEM: 1-in. finish oak floor on 1-in. sub-floor supported by 2-in. x 10-in. wood joists.

SUSPENSION: exposed grid system.

LIGHTS: 2-ft. x 4-ft. light fixtures not to exceed 8% of ceiling area. Lights protected by THERMAFIBER Mineral Wool in field-fabricated tent form.

DIFFUSERS: 55 sq. in. of diffuser opening for each 100 sq. ft. of ceiling area.

ADDITIONAL CEILING CONSTRUCTIONS COVERED: Three AURATONE FIRECODE patterns available: Fissured, Pin Perf and Random drilled. The Snowdrift finish is available on Pin Perf.

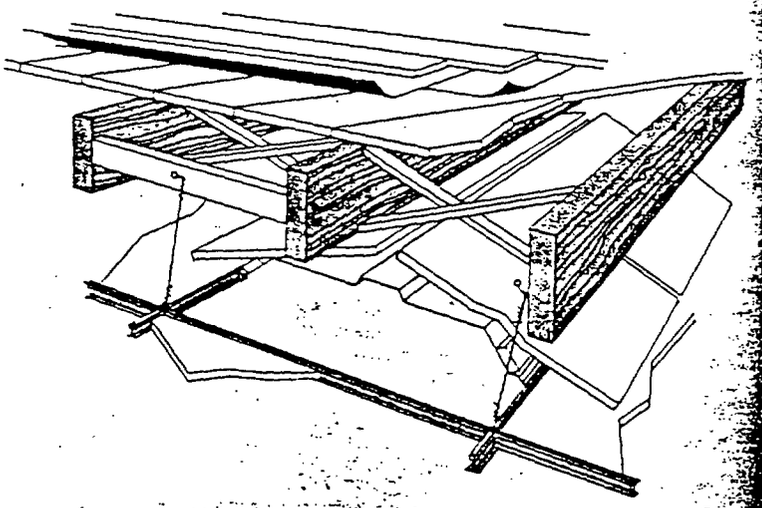

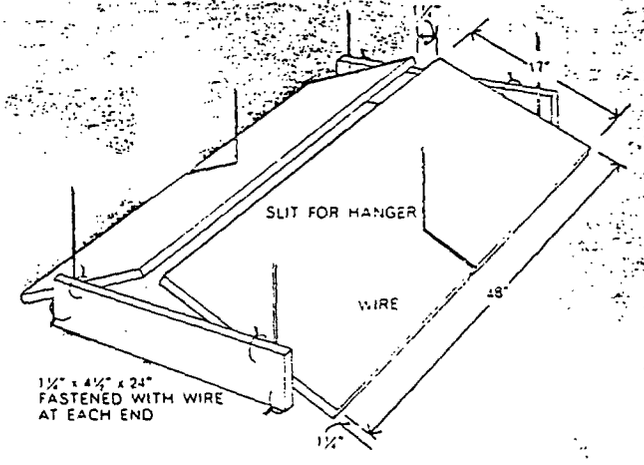

LIGHT FIXTURE PROTECTION SHIELD

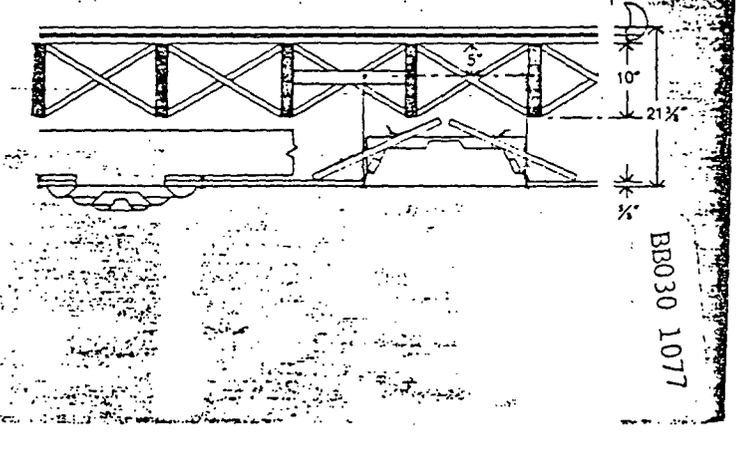

BB030 1077

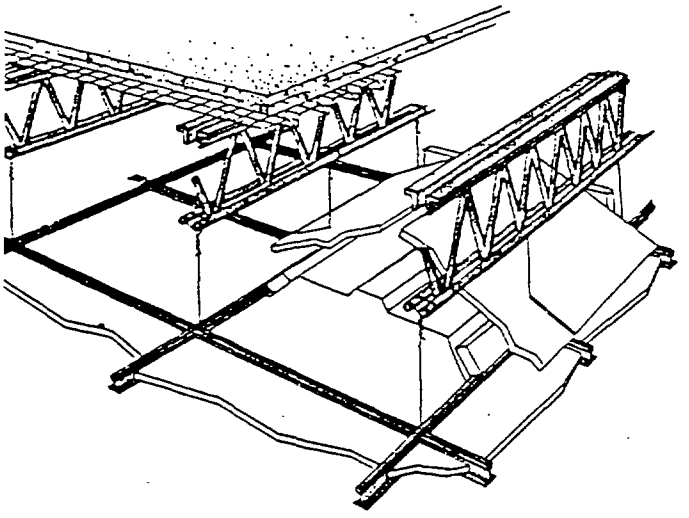

U.L. Design No. 72—2-Hour

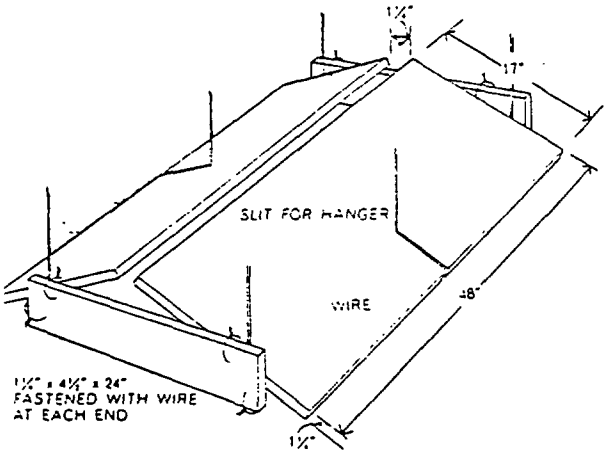

LIGHT FIXTURE PROTECTION SHIELD

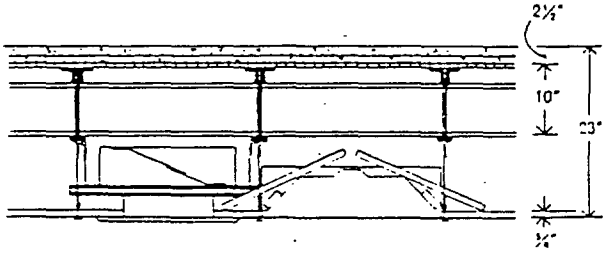

U.L. Design No. 72—2-Hour

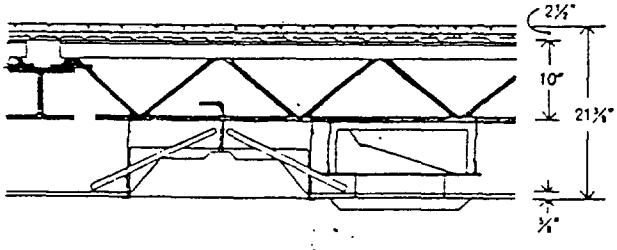

U.L. Design No. 226—2-Hour (4-Hour Beam)

Description

U.L. Design No. 72—2-Hour

AURATONE FIRECODE Acoustical Panels suspended on an exposed rated grid system provides 2-hour rating for bar joist and concrete floor (or roof) construction.

Test Specifications

ACOUSTICAL MATERIAL: ⅝-in., 2-ft. x 2-ft. or 2-ft. x 4-ft. ceiling panels.

STRUCTURAL SYSTEM: 2½-in. reinforced concrete on metal lath supported by 10-in. steel bar joist.

SUSPENSION: exposed grid system.

LIGHTS: 2-ft. x 4-ft. light fixtures not to exceed 16% of ceiling area. Lights protected by THERMAFIBER Mineral Wool in field-fabricated tent form.

DIFFUSERS: 100 sq. in. of diffuser opening for each 100 sq. ft. of ceiling area.

Description

U.L. Design No. 225—2-Hour (4-Hour Beam)

AURATONE FIRECODE Acoustical Panels suspended on an exposed rated grid system provides 2-hour rating for bar joist and beam (4 hours) and concrete floor (or roof) construction.

Test Specifications

ACOUSTICAL MATERIALS: ⅝-in., 2-ft. x 2-ft. or 2-ft. x 4-ft. ceiling panels.

STRUCTURAL SYSTEM: 2½-in. reinforced concrete on metal lath supported by both 8-in. and 10-in. bar joists and 8-in. beam.

SUSPENSION: Exposed grid system.
LIGHTS: 2-ft. x 4-ft. light fixtures not to exceed 16% of ceiling area. Lights protected by THERMAFIBER Mineral Wool in field—fabricated tent form.

DIFFUSERS: 110 sq. in. of diffuser opening for each 100 sq. ft. of ceiling area.

ADDITIONAL CEILING CONSTRUCTIONS COVERED:

(1) Three AURATONE FIRECODE patterns available.
(2) The Snowdrift finish is available on Pin Perf.
(3) Panels may be slotted for AIRSON Air Distribution System.

50%, or less, A-5 slotted
100%, or less, A-2 slotted

BB030 1078

Auratone Firecode Tests

U.L. Design No. 84—2-Hour

AURATONE FIRECODE Acoustical Tile suspended on a standard concealed Z-spline system provides a 2-hour rating for bar joist and concrete floor (or roof) construction.

ACOUSTICAL MATERIAL: ⅝-in., 12-in. x 12-in. T & G kerfed tile.

STRUCTURAL SYSTEM: 2½-in. reinforced concrete on metal lath supported by 10-in. steel bar joist.

SUSPENSION: concealed Z-spline system clipped to 1½-in. channels suspended from joist.

LIGHTS: 2-ft. x 4-ft. light fixtures not to exceed 25% of ceiling area. Lights protected by THERMAFIBER Mineral Wool in field-fabricated box form.

DIFFUSERS: 110 sq. in. of diffuser opening for each 100 sq. ft. of ceiling area.

ADDITIONAL CEILING CONSTRUCTIONS COVERED:

1. Three AURATONE FIRECODE patterns available: Fissured, Pin Perf and Random drilled.
2. The Snowcraft finish is available on Pin Perf.
3. Tile may be slotted for AIRSON Air Distribution System.

50%, or less, A-5 slotted
100%, or less, A-2 slotted

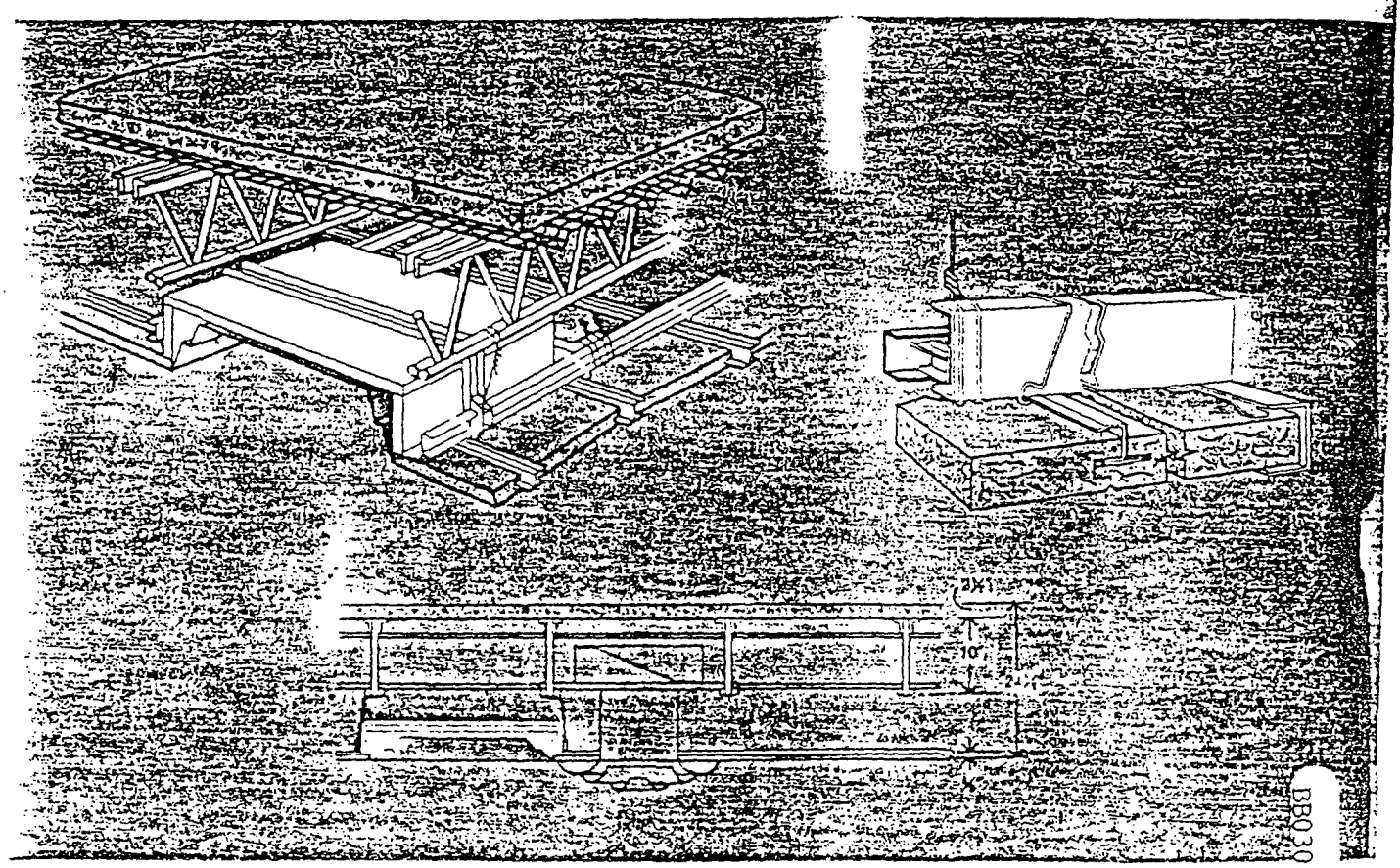

U.L. Design No. 59—3-Hour (4 hour beam)

AURATONE FIRECODE Acoustical Tile suspended on a standard concealed Z-spline system provides a 3-hour floor/ceiling rating for steel beam (rated 4 hours) and concrete floor (or roof) construction.

ACOUSTICAL MATERIAL: ¾-in., 12-in. x 12-in. T & G kerfed tile.

STRUCTURAL SYSTEM: 2½-in. reinforced concrete on 3¼-in. metal floor units supported by 8-in. steel beam.

SUSPENSION: concealed Z-spline system clipped to 1½-in. channels suspended from floor unit.

LIGHTS: 2-ft. x 4-ft. light fixtures not to exceed 16% of ceiling area. Lights protected by THERMAFIBER Mineral Wool in field-fabricated box form.

DIFFUSERS: 110 sq. in. of diffuser opening for each 100 sq. ft. of ceiling area.

ADDITIONAL CEILING CONSTRUCTIONS COVERED:

1. Three AURATONE FIRECODE patterns available: Fissured, Pin Perf and Random drilled.
2. The Snowdrift finish is available on Pin Perf.
3. Tile may be slotted for AIRSON Air Distribution System.

50%, or less, A-3 slotted
100%, or less, A-2 slotted

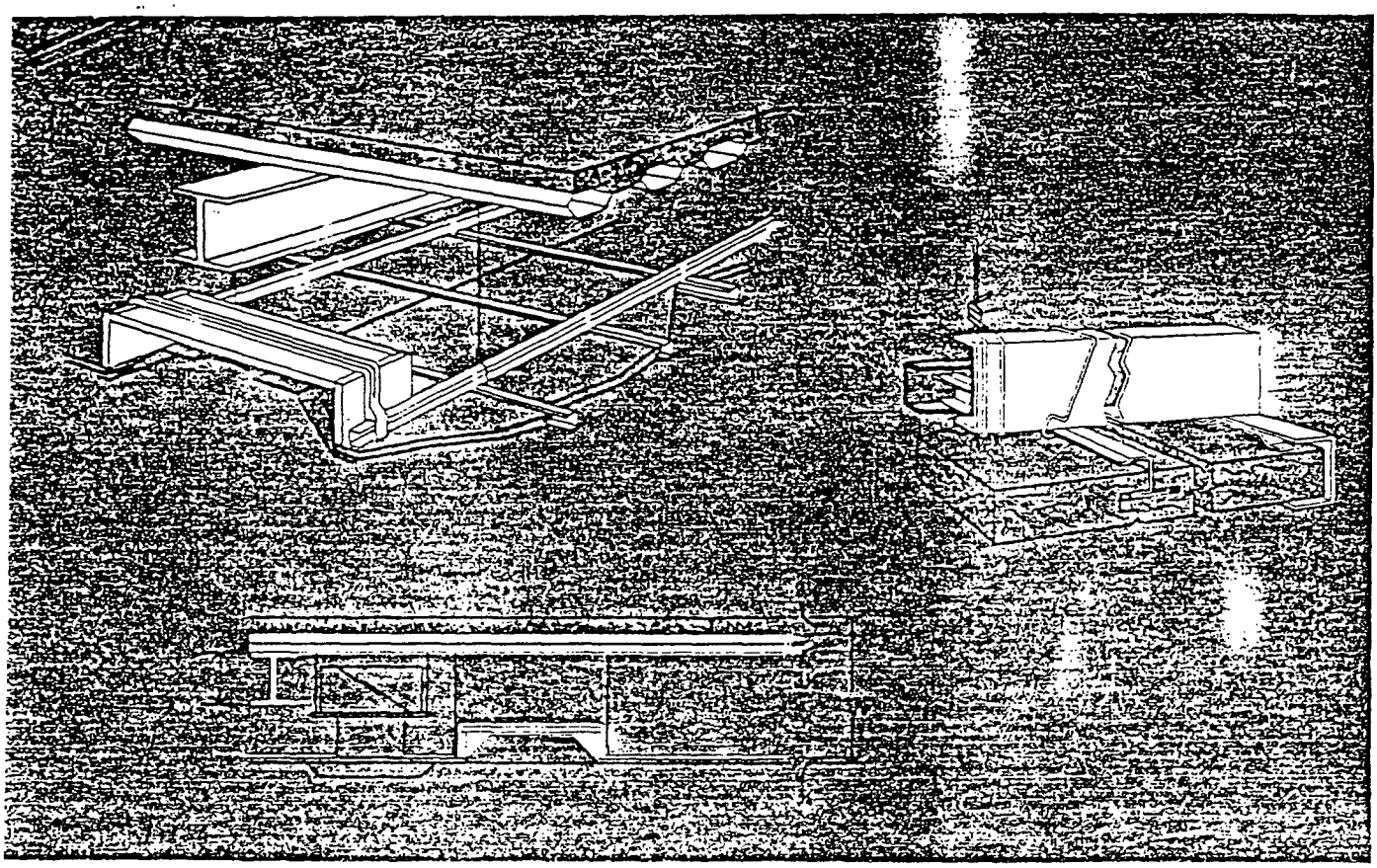

BB030 1080

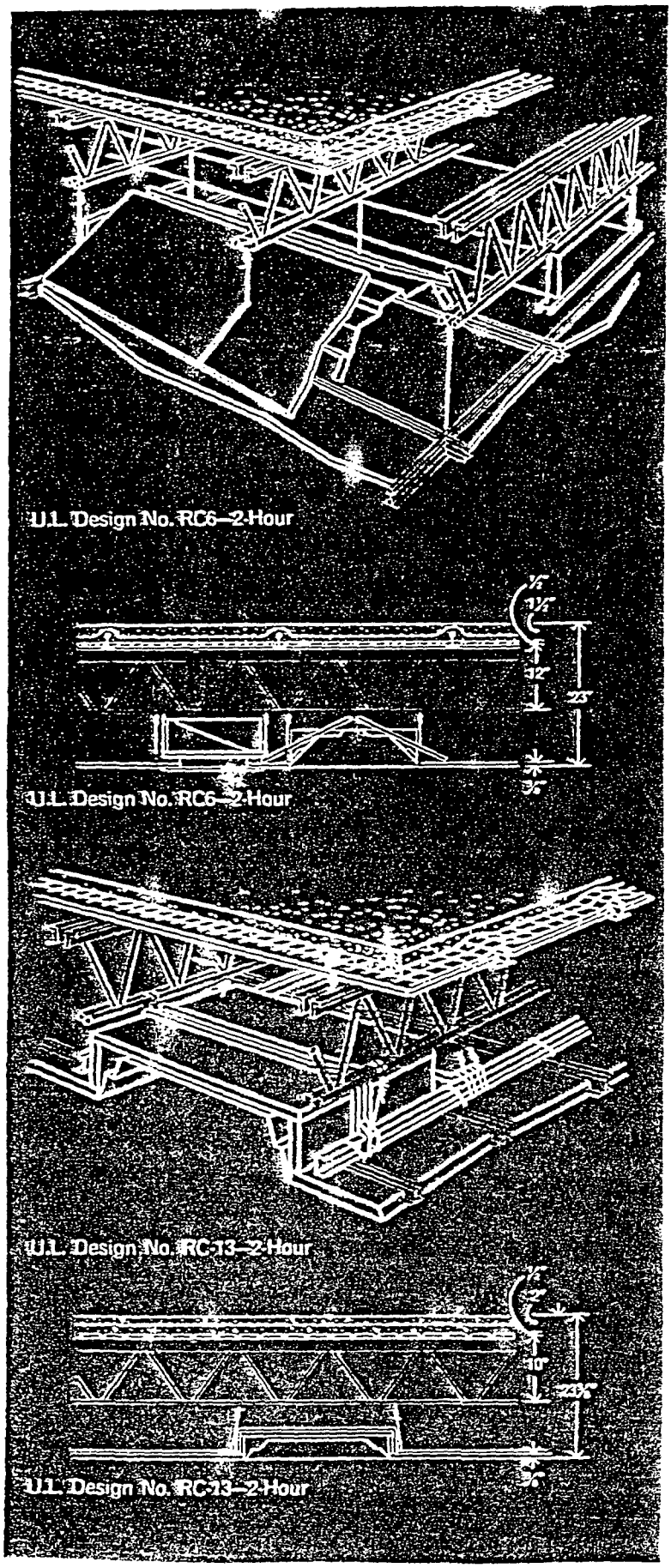

Auratone Firecode Tests

PANELS AND GYPSUM DECK

Description

U.L. Design No. RC6—2-Hour

AURATONE FIRECODE Acoustical Panels suspended on an exposed rated grid system provides 2-hour rating for bar joist and PYROFILL* Gypsum construction.

Test Specifications

ACOUSTICAL MATERIAL: ⅝-in., 2-ft. x 4-ft. ceiling panels.

STRUCTURAL SYSTEM: 1½-in. PYROFILL Gypsum Concrete Roof Deck System on ½-in. SHEETROCK Formboard supported by 12-in. steel bar joist.

SUSPENSION: exposed grid system.

LIGHTS: 2-ft. x 4-ft. light fixtures not to exceed 16% of ceiling area. Lights protected by THERMAFIBER Mineral Wool in field-fabricated tent form.

DIFFUSERS: 110 sq. in. of diffuser opening for each 100 sq. ft. of ceiling area.

ADDITIONAL CEILING CONSTRUCTIONS COVERED:

1. Three AURATONE FIRECODE patterns available: Fissured, Pin Perf or Random drilled.
2. The Snowdrift finish is available on Pin Perf.
3. Panels may be slotted for AIRSON Air Distribution System.

50%, or less, A-5 slotted
100%, or less, A-2 slotted

Description

U.L. Design No. RC-13—2-Hour

AURATONE FIRECODE Acoustical Tile suspended on a standard concealed Z-spline system provides a 2-hour rating with bar joist and THERMOFILL* Gypsum Roof Deck construction.

Test Specifications

ACOUSTICAL MATERIAL: ⅝-in. by 12-in. by 12-in. T & G Kerfed Tile.

STRUCTURAL SYSTEM: 2-inch THERMOFILL Gypsum Concrete Roof Deck System on ½-in. Sheetrock Formboard supported by 10-in. steel bar joist.

SUSPENSION: Concealed Z-spline system clipped to 1½-in. channels suspended from joist.

LIGHTS: 2-ft. x 4-ft. light fixtures not to exceed 16% of ceiling area. Lights protected by THERMAFIBER Mineral Wool in field-fabricated box form.

DIFFUSERS: 54 sq. in. of diffuser opening for each 100 sq. ft. of ceiling area.

ADDITIONAL CEILING CONSTRUCTIONS COVERED:

(1) Three AURATONE FIRECODE patterns available:
(2) The Snowdrift finish is available on Pin Perf.
(3) Tile may be slotted for AIRSON Air Distribution System.

50%, or less A-5 slotted
100%, or less A-2 slotted

*Reg. U.S. Pat. Off.

BB0.30 1081

Fire-rated Perfatone Tests

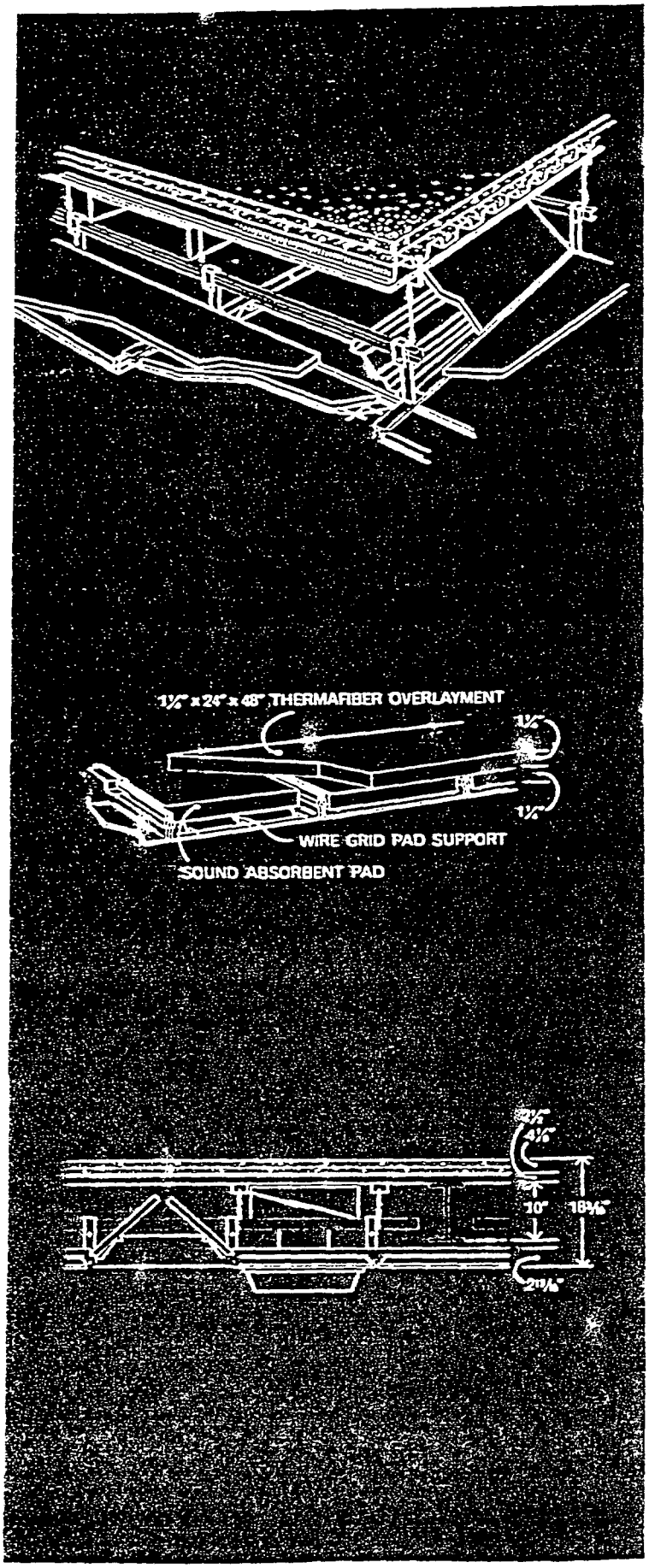

Description

U.L. Design No. 49—3-Hour (4-hour beam)

PERFATONE* Metal Pan Acoustical Ceiling Tile suspended on Tee Runners provides a 3-hour floor/ceiling rating for 10-in. steel beam (rated 4 hours) and concrete floor (or roof) construction.

Test Specifications

ACOUSTICAL MATERIAL: 26-gauge metal pans, 12-in. x 24-in., with sound absorbent mineral wool pads to fit, plus 24-in. x 48-in. overlayment.

STRUCTURAL SYSTEM: 2½-in. reinforced concrete on 1⅝-in. metal deck supported by 10-in. steel beam.

SUSPENSION: PERFATONE Tee Runners strapped to 1½-in. channels suspended from metal deck.

LIGHTS: 2-ft. x 4-ft. light fixtures not to exceed 12% of ceiling area. Lights protected by THERMAFIBER Mineral Wool in field-fabricated tent form.

DIFFUSERS: 50 sq. in. of diffuser opening for each 100 sq. ft. of ceiling area.

ADDITIONAL CEILING CONSTRUCTION COVERED: PERFATONE available in either random or diagonal perforation pattern.

*Reg. U.S. Pat Off.

BB030 1082

Rated protection for lighting fixtures...Thermafiber

Ceiling systems involving recessed lighting must include additional thermal protection around and over the lighting fixtures in order to meet fire rating requirements. THERMAFIBER Mineral Wool Insulation, in semi-rigid board form, provides this additional protection for both types of ceiling construction shown here. It is used in achieving ratings for the design numbers listed.

This construction is used in achieving the following ratings:
No. 49—3-Hour (4-Hour Beam)
rated PERFATONE Metal Pan System
No. 65—3-Hour (5-Hour Beam)
AURATONE FIRECODE Ceiling Panel System
No. 72—2-Hour
AURATONE FIRECODE Ceiling Panel System
No. 226—2-Hour (4-Hour Beam)
AURATONE FIRECODE Ceiling Panel System
No. RC6—2-Hour
AURATONE FIRECODE Ceiling Panel System
No. 18—1½-Hour (3-Hour Beam)
AURATONE FIRECODE Ceiling Panel System
No. 31—1 Hour
AURATONE FIRECODE Ceiling Panel System

Exposed Grid with Ceiling Panels

When ceiling construction involves exposed grid and lay-in ceiling board, lighting fixture openings are protected in this manner. 1¼-in. THERMAFIBER Mineral Wool Insulation Boards are assembled in a tent-like assembly as shown. The assembly is job-constructed, using standard tie wire to hold the various pieces loosely together and to secure the whole assembly to the supporting hanger wires.

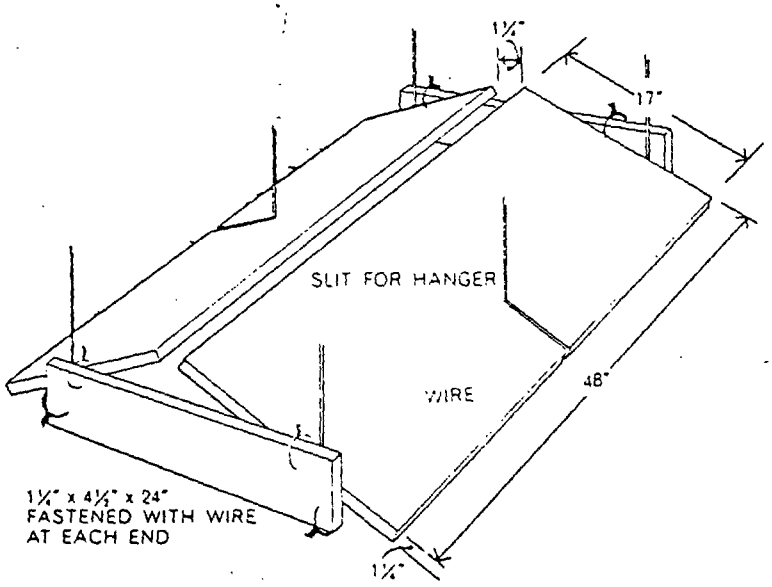

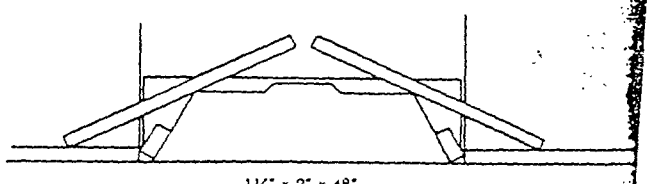

CROSS SECTION
THROUGH TROFFER

BB030 1083

...LIGHT FIXTURE COVER—TENT ASSEMBLY

Concealed Z-Spline with Ceiling Tile

When ceiling construction involves concealed Z-spline, lighting fixture openings are protected in this manner. 1½-in. THERMAFIBER Mineral Wool is assembled in a box-like assembly as shown. The assembly is job-constructed using standard tie wire to hold the various pieces loosely together.

This construction is used in achieving the following ratings:
No. 59—3-Hour (4-Hour Beam) AURATONE FIRECODE Tile System
No. RC-13—2-Hour AURATONE FIRECODE Tile System
No. 84—2-Hour AURATONE FIRECODE Tile System
No. 85—2-Hour (2-Hour Beam) ACOUSTONE 120 Tile System

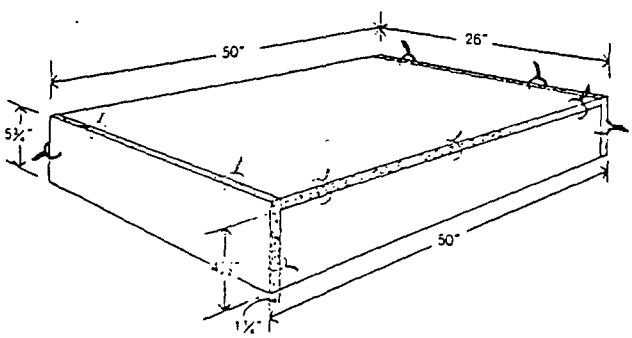

BOX ASSEMBLY

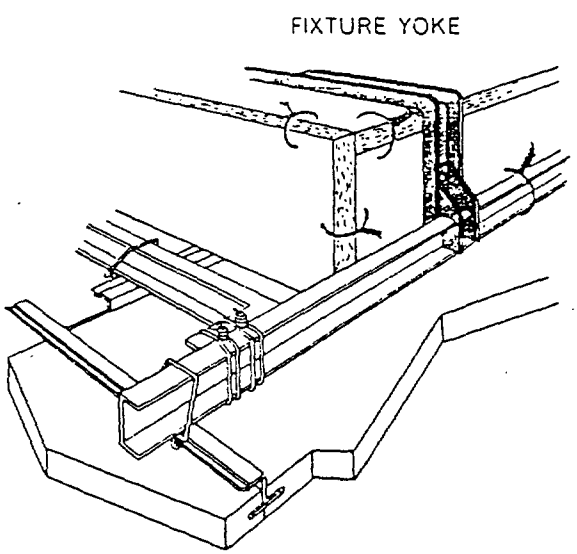

CORNER DETAIL

1½" THERMAFIBER MINERAL WOOL LIGHT FIXTURE COVER—BOX ASSEMBLY

BB030 1084

Sound Absorption and Sound Attenuation Data

SOUND ABSORPTION COEFFICIENTS

PRODUCT	THICKNESS	MOUNTING	NRC	SOUND ABSORPTION COEFFICIENTS at cps 125	250	500	1000	2000	4000
ACOUSTONE 90	¼	#7	.75-.85	.83	.73	.68	.87	.93	.78
GLACIER ACOUSTONE 90	¼ (nom)	#7	.80-.90	.60	.73	.73	.93	.88	.90
MOTIF'ED ACOUSTONE 90	¼	#7	.75-.85	.80	.69	.66	.86	.90	.87
ACOUSTONE 120	¼	#7	.70-.80	.45	.46	.72	.97	.87	.90
GLACIER ACOUSTONE 120	¼ (nom)	#7	.75-.85	.30	.46	.77	.99	.89	.90
MOTIF'ED ACOUSTONE 120	¼	#7	.65-.75	.58	.46	.69	.91	.80	.76
ACOUSTONE 180	¼	#7	.70-.80	.45	.48	.62	.97	.96	.96
AURATONE FIRECODE TILE									
Fissured	⅝	#7	.60-.70	.36	.36	.55	.86	.77	.63
Pin Perf.	⅝	#7	.55-.65	.39	.35	.56	.86	.72	.49
Random	⅝	#7	.40-.50	.34	.28	.34	.53	.63	.59
Fissured	¾	#7	.60-.70	.36	.39	.66	.87	.74	.62
Pin Perf.	¾	#7	.60-.70	.38	.39	.66	.88	.72	.51
Random	¾	#7	.65-.75	.34	.38	.69	.92	.71	.53
AURATONE FIRECODE CEILING PANELS									
Fissured	⅝	#7	.60-.70	.24	.30	.72	.89	.73	.67
Pin Perf.	⅝	#7	.60-.70	.25	.33	.73	.88	.70	.55
Fissured	½	#7	.65-.75	.27	.30	.55	.85	.74	.67
Pin Perf.	½	#7	.65-.75	.27	.29	.58	.86	.70	.54

SOUND ATTENUATION DATA

PRODUCT	SUSPENSION SYSTEM*	SIZE TESTED	STC	ATTENUATION (Decibles) at cps 125	175	250	350	500	700	1000	1400	2000	2800	4000
ACOUSTONE 120	ICF	12" x 12"	39	28	31	34	33	38	41	43	49	53	59	56
FIRECODE AURATONE TILE														
Fissured	CCF	12" x 12"	45	39	38	31	39	41	42	50	55	62	67	64
Pin Perf.	CCF	12" x 12"	45	34	37	32	41	42	45	51	57	64	67	65
Random	CCF	12" x 12"	43	39	38	30	42	41	45	51	55	63	68	64
Fissured	CCF	12" x 12"	44	31	34	32	39	40	43	49	51	58	63	62
Pin Perf.	CCF	12" x 12"	49	38	38	36	45	45	48	53	56	61	66	63
FIRECODE AURATONE PANELS														
Fissured	CE	24" x 48"	42	29	34	32	38	38	43	47	48	52	53	52
Pin Perf.	CE	24" x 48"	44	31	38	35	39	40	46	47	48	53	53	49
Random	IE	24" x 48"	43	29	34	34	37	41	43	47	52	53	58	57
Fissured	CE	24" x 48"	40	29	38	31	35	36	41	45	47	53	53	50
Pin Perf.	CE	24" x 48"	42	29	39	35	36	38	43	46	49	53	53	51
Fissured Airson A-5	CEU-50	24" x 48"	37	25	33	26	30	32	35	41	48	51	52	50
Fissured Airson A-2	CEU-50	24" x 48"	39	28	36	31	33	36	40	46	46	52	53	52

*SUSPENSION SYSTEMS.

ICF—Interrupted Ceiling—Concealed Z—Flat Metal Spline.

CCF—Continuous Ceiling—Concealed Z—Flat Metal Spline.

CE—Continuous Ceiling—Exposed Grid.

IE—Interrupted Ceiling—Exposed Grid.

CEU-50 Continuous Ceiling—Exposed Grid—50% Slotted Pattern.



BB030 1085

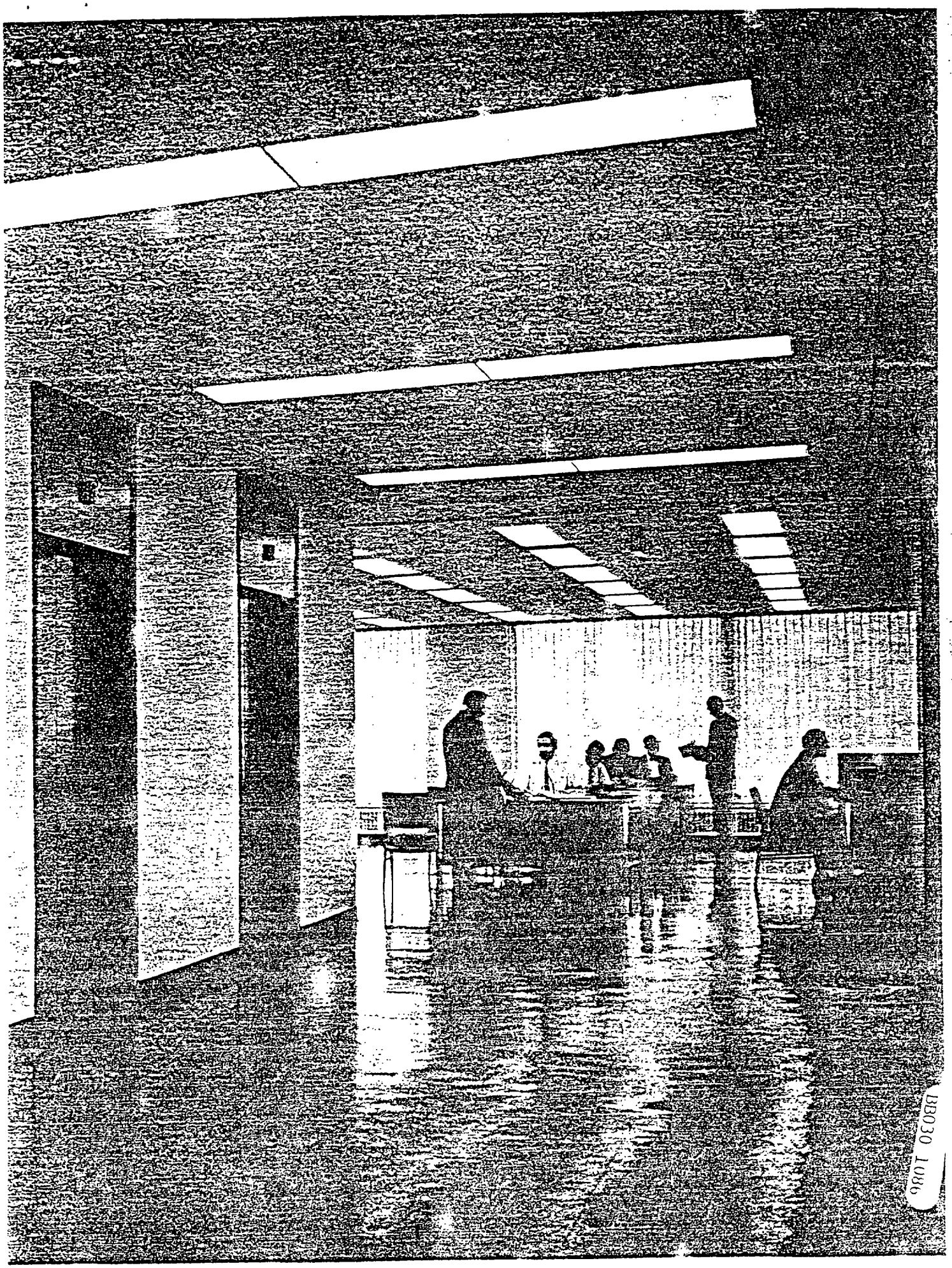

BB030 1086

Typed/Printed Specimens

781 030 1087