COATES

1971

CAR SHOP MANUAL

PROPERTY OF FORD MOTOR COMPANY

Ford

COATES

COATES V FORD
9 - 0228

PLAINTIFF'S EXHIBIT
31768.0

PLAINTIFF'S EXHIBIT
WV-06400

should fit snugly around the bleeder fitting.

2. Submerge the free end of the tube in a container partially filled with clean brake fluid, and loosen the bleeder fitting approximately 3/4 turn

3. Push the brake pedal down slowly through its full travel. Close the bleeder fitting, then return the pedal to the full-released position. Repeat this operation until air bubbles cease to appear at the submerged end of the bleeder tube

4. When the fluid is completely free of air bubbles, close the bleeder fitting and remove the bleeder tube

5. Repeat this procedure at the brake wheel cylinder on the opposite side Refill the master cylinder reservoir after each wheel cylinder is bled and install the master cylinder cover and gasket Be sure the diaphragm type gasket is properly positioned in the master cylinder cover. When the bleeding operation is completed, the fluid level should be filled to within 1/4 inch of the top of the reservoirs.

6. If the primary (front brake) system is to be bled. Repeat steps 1 through 5 at the right front brake cylinder and ending at the left front brake cylinder

7. Centralize the pressure differential valve. Refer to centralizing the Pressure Differential Valve procedures.

Pressure Bleeding

Bleed the longest lines first The bleeder tank should contain enough new Ford Brake Fluid to complete the bleeding operation Use Ford Brake Fluid—Extra Heavy Duty—Part Number C6AZ-19542-A (ESA-M6C25-A) or equivalent for all brake applications The brake fluid is colored blue for identification purposes. Do not mix low temperature brake bluid with the specified brake fluid during the bleeding operations. Never re-use brake fluid that has been drained from the hydraulic system. The tank should be charged with approximately 10 to 30 pounds of air pressure. Never exceed 50 pounds pressure.

1. Clean all dirt from the master cylinder reservoir cover

2. Remove the master cylinder reservoir cover and rubber gasket, and fill the master cylinder reservoir with the specified brake fluid. Install the pressure bleeder adapter tool to the master cylinder, and attach the bleeder tank hose to the fitting on the adapter.

Master cylinder pressure bleeder adapter tools can be obtained from the various manufacturers of pressure bleeding equipment. Follow the instructions of the manufacturer when installing the adapter.

Do not use the secondary piston stop screw, located on the bottom of the master cylinder, to bleed the master cylinder.

3. If the rear wheel cylinders, the secondary brake system, are to be bled, position a 3/8 inch box wrench (Fig. 3) on the bleeder fitting on the right rear brake wheel cylinder. Attach a bleeder tube to the bleeder fitting. The end of the tube should fit snugly around the bleeder fitting.

4. Open the valve on the bleeder tank to admit pressurized brake fluid to the master cylinder reservoir

5. Submerge the free end of the tube in a container partially filled with clean brake fluid, and loosen the bleeder fitting

6. When air bubbles cease to appear in the fluid at the submerged end of the bleeder tube, close the bleeder fitting and remove the tube.

7. Repeat steps 3 through 6 at the left rear wheel cylinder.

8. If the vehicle contains drum-type front brakes and the primary (front) brake system is to be bled, repeat steps 3 through 6, starting at the right front wheel cylinder ending at the left front wheel cylinder.

9. When the bleeding operation is completed, close the bleeder tank valve and remove the tank hose from the adapter fitting

10. Remove the Pressure Bleeder Adapter Tool Fill the master cylinder reservoirs to within 1/4 inch of the top. Install the master cylinder cover and gasket Be sure the diaphragm type gasket is properly positioned in the master cylinder cover.

11. Centralize the pressure differential valve Refer to Centralizing the Pressure Differential Valve procedures

8003 0642

CENTRALIZING THE PRESSURE DIFFERENTIAL VALVE

After any repair or bleeding of the primary (front brake) or secondary (rear brake) system, the dual-brake warning light will usually continue to be illuminated due to the pressure differential valve remaining in the off-center position.

To centralize the pressure differential valve and turn off the warning light after a repair operation:

1. Turn the ignition switch to the ACC or ON position

PLAINTIFF'S EXHIBIT

FD-813

5 CLEANING AND INSPECTION

DRUM BRAKES

1. Remove the wheel from the drum, and remove the drum as outlined in Part 12-02

2. Brush all dust from the backing plates and interior of the brake drums

3. Inspect the brake shoes for excessive lining wear or shoe damage If the lining is worn within 1/32 inch of the rivet heads or if the shoes are damaged, they must be replaced Replace any lining that had been contaminated with oil, grease or brake fluid Replace lining in axle sets Prior to replacement of lining, the drum diameter should be checked to determine if oversize linings must be installed

4. Check the condition of brake shoes, retracting springs, hold-down springs, and drum for signs of overheating. If the shoes have a slight blue coloring, indicating overheating, replacement of the retracting and hold-down springs is strongly recommended Overheated springs lose their pull and could cause the new lining to wear prematurely, If they are not replaced. If the brake drums are heat spotted, indicating a overheated condition, they should be replaced

5. If the vehicle has 30,000 or more miles of operation on the brake linings or signs of overheating are pressent when relining brakes, the wheel cylinders should be disassembled and inspected for wear and entrance of dirt into the cylinder. The cylinder cups should be replaced, thus avoiding future problems

6. Inspect all other brake parts and replace any that are worn or damaged

7. Inspect the brake drum and, if necessary, refinish Brake drum maximum diameter is shown on each brake drum (Fig. 4) If the maximum diameter shown on the drum is ex-

1971 Car Pinto

ceeded either by wear, or refinishing, the drum must be replaced Refer to Part 12-02 for refinishing

1. Check the fluid level in the master cylinder reservoirs and fill them to within 1/4 inch of the top with the specified brake fluid, if necessary.

2. Depress the brake pedal and the piston will center itself causing the brake warning light to go out.

3. Turn the ignition switch to the OFF position.

4. Before driving the vehicle, check the operation of the brakes and be sure that a firm pedal is obtained.

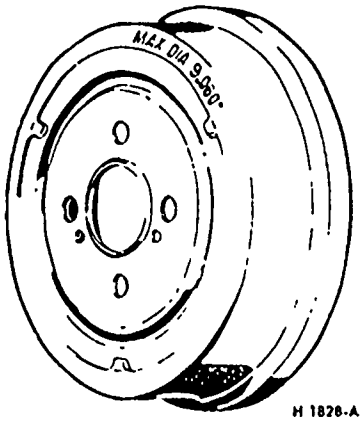

FIG. 4 Brake Drum Maximum Diameter Marking

HYDRAULIC LINES

Steel tubing is used throughout the brake system with the exception of the flexible hoses at the front wheels and at the rear axle housing brake tube connection.

Always bleed the applicable primary or secondary brake system after primary or secondary brake system hose or line replacement. Centralize the pressure differential valve after bleeding the system.

Brake Tubing

If a section of the brake tubing becomes damaged, the entire section should be replaced with tubing of the same type, size, shape and length **Copper tubing should not be used in a hydraulic system.** When bending brake tubing to fit underbody or rear axle contours, be careful not to kink or crack the tube

All brake tubing should be double flared properly to provide good leak-proof connections. Clean the brake tubing by flushing with clean brake fluid before installation.

When connecting a tube to a hose, tube connector, or brake cylinder, tighten the tube fitting nut to specified torque with Milbar Tool 1112-144 or equivalent.

Brake Hose

A flexible brake hose should be replaced if it shows signs of softening, cracking, or other damage

When installing a new front brake hose, position the hose to avoid contact with other chassis parts Place a new copper gasket over the hose fitting and thread the hose assembly into the front wheel cylinder. Engage the opposite end of the hose to the bracket on the frame Install the horseshoe-type retaining clip, and connect the tube to the hose with the tube fitting nut

A rear brake hose should be installed so that it does not touch the muffler outlet pipe or shock absorber Thread the hose into the rear brake tube connector. Engage the front end of the hose to the bracket on the frame Install the horseshoe-type retaining clip, and connect the tube to the hose with the tube fitting nut

9 SPECIAL SERVICE TOOLS

SPECIAL TOOLS

Ford Tool No.	Description		Ford Tool No	Description
Rotunda WRE 500 50	Brake Pedal Effort Gauge		Rotunda FRE 1432	Brake Drum Micrometer
Rotunda 1436	Draphragm Type Bleeder		Mibar 1112 144	Inch Pound Torque Wrench
Tool 4201-C	Universal Dial Indicator and Bracket			

CH1841-A

8003 0643

PRODUCED BY FORD

valve release rod must be pulled outward and held a minimum of 1/16 inch (Fig 6) while bleeding the primary brake system.

10. If the vehicle contains drumtype front brakes and the primary (front) brake system is to be bled, repeat steps 4 through 7, starting at the right front wheel cylinder ending at the left front wheel cylinder

11. When the bleeding operation is completed, close the bleeder tank valve and remove the tank hose from the adapter fitting.

12. On disc brake equipped vehicles, be sure that the front brake pistons are returned to their normal positions and that the shoe and lining assemblies are properly seated by depressing the brake pedal several times until normal pedal travel is established.

13. Remove the Pressure Bleeder Adapter Tool Fill the master cylinder reservoirs to within 1/4 inch of the top. Install the master cylinder cover and gasket Be sure the Diaphragm type gasket is properly positioned in the master cylinder cover.

14. Centralize the pressure differential valve Refer to Centralizing the Pressure Differential Valve procedures

CENTRALIZING THE PRESSURE DIFFERENTIAL AND/OR PRESSURE CONTROL VALVE

After any repair or bleeding of the primary (front brake) or secondary (rear brake) system, the dual-brake warning light will usually continue to be illuminated due to the pressure differential valve remaining in the offcenter position

To centralize the pressure differential valve and turn off the warning light after a repair operation

1. Turn the ignition switch to the ACC or ON position
2. Check the fluid level in the master cylinder reservoirs and fill them to within 1/4 inch of the top with the specified brake fluid, if necessary
3. Depress the brake pedal and the piston will center itself causing the brake warning light to go out.
4. Turn the ignition switch to the OFF position
5. Before driving the vehicle, check operation of the brakes and be sure that a firm pedal is obtained

PLAINTIFF'S EXHIBIT

FD-814

5 CLEANING AND INSPECTION

DISC BRAKES

1. Remove the wheel and tire and the shoe and lining assemblies as outlined in Part 12-20
2. Inspect the brake shoes and lining for wear If the lining is worn to within 1/32 inch of the rivet heads or if there is more than 0.125 taper from end to end or if lining shows evidence of brake fluid contamination, replace all (4) shoe and lining assemblies on both front wheels
3. Check the caliper to spindle attaching bolt wires If the wires are damaged, re-torque the bolts and replace the wires
4. To check rotor runout, first eliminate the wheel bearing end play by tightening the adjusting nut After tightening the nut, check to see that the rotor can still be rotated
5. Clamp a dial indicator to the caliper housing so that the pointer contacts the rotor at a point approximately 1 inch from the outer edge Rotate the rotor and take an indicator reading If the reading exceeds 0 003 inch on custom vehicles and 0 002 inch on light vehicles total lateral runout on the indicator, replace or resurface the disc brake rotor The following requirement must be met when resurfacing disc brake rotors:

Rotunda Disc Brake Lathe FRE-1466-B should be used to refinish the disc brake rotors. The step-by-step resurfacing procedure provided with the tool must be adhered to.

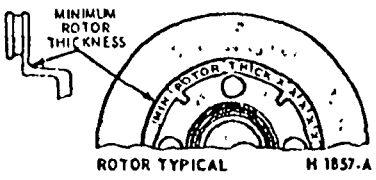

FIG. 7 Disc Brake Rotor Minimum Thickness Marking Location

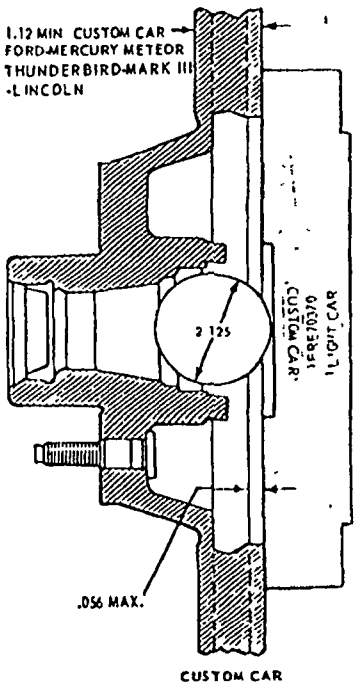

CUSTOM CAR

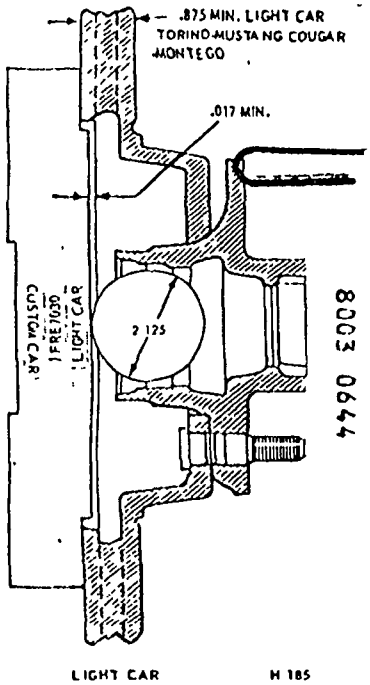

LIGHT CAR H 185

FIG. 8 Disc Brake Rotor Gauge

1971 Car - Vol 1 Chasis

The finished braking surface of the rotor must be flat and parallel within 0.0007 inch; lateral runout must not exceed 0.003 inch on custom vehicles and 0.002 inch on light vehicles total indicator reading, braking surface are to be 80/15 micro inches.

On all models, the minimum limiting dimension from the inboard bearing cup to the inboard rotor face and the minimum rotor thickness dimension, must be observed when removing material from the rotor braking surfaces. Rotor minimum thickness is shown on each rotor (Fig 7) If the rotor thickness is less than that shown on the rotor, either through wear or after refinishing, the rotor must be replaced A ball and gage bar (Rotunda Kit FRE-70170) is to be used when checking minimum dimensions (Fig 8)

When the runout check is finished be sure to adjust the bearings as outlined in Group 11-02 in order to prevent bearing failure.

6. Check the rotor for scoring Minor scores can be removed with a fine emery cloth If the rotor is excessively scored, refinish it as outlined in step 5 or replace the rotor, if required

7. Visually check the caliper If the caliper housing is leaking it should be replaced If a seal is leaking the caliper must be disassembled and new seals installed If a piston is seized in the bore a new caliper housing is required.

Check the brake hoses for signs of cracking, leaks or abrasion Replace them if necessary

Disc Brake Service Precautions

1. Grease or any other foreign material must be kept off the caliper assembly, surfaces of the rotor and external surfaces of the hub during service operations Handling of the rotor and caliper assemblies should be done in a way to avoid deformation of the brake rotor and nicking or scratching of brake linings

2. If a caliper piston is removed for any reason, the piston seal must be replaced

3. During removal and installation of a wheel assembly, exercise care not to interfere with and damage the caliper splash shield or the bleeder screw fitting.

4. Front wheel bearing end play is critical and must be within specifications

5. Be sure the vehicle is centered on the hoist before servicing any front end components, to avoid bending or damaging the rotor splash shield on full right or left wheel turns

6. Riding of the brake pedal (common on left foot applications) should be avoided during vehicle operation

7. The wheel and tire must be removed separately from the brake rotor, unlike drum brakes where the wheel, tire and drum are removed as a unit

8. On floating caliper type disc brakes, whenever the caliper is removed the caliper locating pins should be inspected for wear or damage

9. On floating caliper type disc brakes, the caliper assembly must be removed from the spindle prior to removal of the shoe and lining assemblies

10. On floating caliper type disc brakes the calipers must not be interchanged from one side to the other When the caliper is installed on its proper anchor plate and spindle, the bleeder screw will point to the rear of the vehicle. If a caliper is installed on the wrong side of the vehicle, it is not possible to bleed the system properly

11 Do not attempt to clean or restore oil or grease soaked brake linings When contaminated linings are found, brake linings must be replaced in complete axle sets

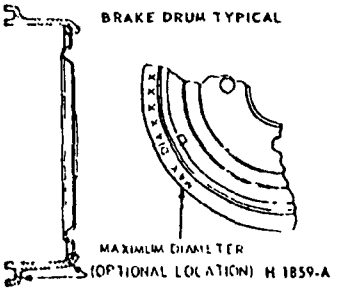

FIG. 9 Brake Drum Maximum Inside Diameter Marking Location

DRUM BRAKES

1. Remove the wheel from the drum, and remove the drum as outlined in Part 12-02

2. Brush all dust from the backing plates and interior of the brake drums

3. Inspect the brake shoes for excessive lining wear or shoe damage If the lining is worn within 1/32 inch of the rivet heads or if the shoes are damaged, they must be replaced Replace any lining that had been contaminated with oil, grease or brake fluid Replace lining in axle sets Prior to replacement of lining, the drum diameter should be checked to determine if oversize linings must be installed

4. Check the condition of brake shoes, retracting springs, hold-down springs, and drum for signs of overheating If the shoes have a slight blue coloring, indicating overheating, replacement of the retracting and hold-down springs is strongly recommended Overheated springs lose **their pull and could cause the new lining to wear prematurely, if they are not replaced. If the brake drums are heat spotted, indicating a overheated condition, they should be replaced.**

5. If the vehicle has 30,000 or more miles of operation on the brake linings or signs of overheating are present when relining brakes, the wheel cylinders should be disassembled and inspected for wear and entrance of dirt into the cylinder The cylinder cups should be replaced, thus avoiding future problems

6. Inspect all other brake parts and replace any that are worn or damaged

7. Inspect the brake drum and, if necessary, refinish Brake drum maximum Inside diameter is shown on each drum (Fig 9) If the maximum inside diameter shown on the drum is exceeded either by wear or refinishing, the drum must be replaced Refer to Part 12-02 for refinishing

BRAKE BOOSTER

Check the booster operation as noted in Part 12-01 Power Brake Functional Test If the brake booster is damaged or inoperative replace it with a new booster The brake booster is serviced only as an assembly.

HYDRAULIC LINES

Steel tubing is used throughout the brake system with the exception of the flexible hoses at the front wheels and at the rear axle housing brake tube connection

Always bleed the applicable primary or secondary brake system after primary or secondary brake system hose or line replacement. Centralize the pressure differential valve after bleeding the system

Brake Tubing

If a section of the brake tubing becomes damaged, the entire section should be replaced with tubing of the same type, size, shape and length

PRODUCED BY FORD

pedal shaft, then remove the clutch pedal and shaft assembly, the brake pedal assembly, and the bushings from the pedal support bracket (Figs 11 and 14)

Installation

1. Apply a coating of SAE 10 engine oil to the bushings and locate all bushings in their proper places on the clutch and brake pedal assemblies

2. Position the brake pedal to the support bracket, then install the clutch pedal and shaft assembly through the support bracket and brake pedal assembly Install the spring clip (Figs 11 and 14)

3. Install the clutch pedal assist spring

4. Connect the clutch pedalto-equalizer rod to the clutch pedal assembly with the bushing and the spring clip retainer Apply SAE 10 engine oil to the bushing

5. Install the inner nylon washer, the master cylinder or booster push rod, and the bushing on the brake pedal pin Position the switch so that it straddles the push rod with the switch slot on the pedal pin and the switch outer hole just clearing the pin Slide the switch completely onto the pin, and install the outer nylon washer as shown in Figs 11 and 14 Secure these parts to the pin with the self-locking pin

6. Connect the stop light switch wires to the connector, and install the wires to the retaining clip

7. Adjust the clutch pedal free play (Group 16-02) to specification, if required

8. Check the Brake Pedal Free Height and Travel Measurements (Part 12-01, Section 1)

Torino, Montego, Maverick, Mustang and Cougar—Automatic Transmission or Mustang and Cougar with Standard Transmission

Removal

1. Disconnect the stop light switch wires at the connector

2. Remove the self-locking pin and slide the stop light switch off the brake pedal pin just far enough for the switch outer hole to clear the pin. Then lower the switch away from the pin. Slide the master cylinder or booster push rod and the nylon washers and bushing off from the brake pedal pin (Figs. 11, 12, 14 and 15).

3. On all vehicles except Mustang and Cougar, re move the self-locking pin and washer from the brake pedal shaft, then remove the shaft, the brake pedal assembly and the bushings from the pedal support bracket On Mustang and Cougar vehicles, remove the locknut and bolt from the pedal support Remove the pedal assembly from the support bracket

Installation

1. Apply a coating of SAE 10 engine oil to the bushings and locate all the bushings in their proper places on the pedal assembly and pedal support bracket (Figs 11, 12, 14 and 15)

2. Position the brake pedal assembly to the support bracket, then install the pedal shaft or bolt through the support bracket and brake pedal assembly. Install the retainer or locknut

3. Install the inner nylon washer, the master cylinder or booster push rod, and the bushing on the brake pedal pin Position the switch so that it straddles the push rod with the switch slot on the pedal pin, and the switch outer hole just clearing the pin Slide the switch completely onto the pin, and install the outer nylon washer as shown in Figs 11, 12, 14 and 15 Secure these parts to the pin with the self-locking pin

4. Connect the stop light switch wires to the connector, and install the wires in the retaining clip

Check the Brake Pedal Free Height and Travel Measurements, Part 1201

5 MAJOR REPAIR OPERATIONS

BRAKE DRUM REFINISHING

Minor scores on a brake drum can be removed with sandpaper A drum that is excessively scored or shows a total indicator runout of over 0 007 inch should be turned down Remove only enough stock to eliminate the scores and true up the drum Brake drum maximum inside diameter is shown on each drum (Fig 16) If the maximum inside diameter shown on the drum is exceeded either through wear or refinishing, the drum must be replaced

Check the inside diameter of the brake drum with a brake drum micrometer (Tool FRE-1432)

After a drum is turned down, wipe the refinished surface with a cloth soaked in clean denatured alcohol If one drum is turned down the opposite [illegible]

BRAKE SHOE RELINING

Brake linings that are worn to within 1/32 inch of the rivet head or are less than 0 030 inch thick (bonded lining) or have been contaminated with brake fluid, grease or oil must be replaced Failure to replace worn linings will result in a scored drum When it is necessary to replace linings, they must also be replaced on the wheel on the opposite side of the vehicle.

Inspect brake shoes for distortion, cracks, or looseness. If this condition exists, the shoe must be discarded. Do not attempt to repair a damaged brake shoe.

1. Wash the brake shoes thoroughly in a clean solvent Remove all burrs or rough spots from the shoes

2. Check the inside diameter of [illegible]

3. Position the new lining on the shoe Starting in the center, insert and secure the rivets, working alternately towards each end Replacement linings are ground and no further grinding is required.

4. Check the clearance between

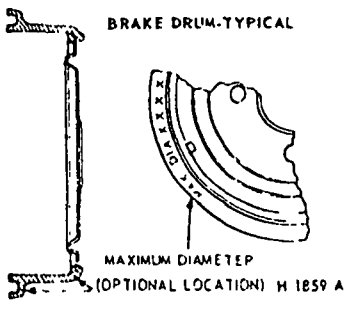

FIG 16 Brake Drum Maximum Inside Diameter Marking Location

8003 0647 PQ
PRODUCED BY FORD

cations The extra heavy duty brake fluid is colored blue for identification. Do not mix low temperature brake fluids with the specified fluids for the disc brake system.

6. Bleed the dual-master cylinder and the primary and secondary brake systems Centralize the pressure differential valve Refer to Hydraulic System Bleeding and Centralizing of the Differential Valve, Part 12-01, for the proper procedure

7. Operate the brakes several times, then check for external hydraulic leaks

PRESSURE DIFFERENTIAL VALVE ASSEMBLY

Removal

The pressure differential valve assembly is serviced as an assembly only. Do not attempt to repair this unit.

1. Disconnect the brake warning light connector from the warning light switch

2 Disconnect the front inlet and rear outlet tubes from the valve assembly (Fig 3)

3. Remove the two attaching nuts and bolts from the valve bracket on the underside of the fender apron and remove the valve assembly and bracket from the vehicle

Installation

1. Position the valve assembly and bracket to the fender apron Install the attaching nuts and bolts torque them to specifications

2. Install the front inlet and rear outlet tubes to the valve assembly. Torque them to specifications

3. Connect the brake warning light connector to the warning light switch

4. Bleed the system and centralize the pressure differential valve following the procedures in Centralizing the Pressure Differential Valve

BRAKE BOOSTER

Removal

1. Working from inside the vehicle below the instrument panel, disconnect the booster push rod from the brake pedal assembly To do this, proceed as follows:

Disconnect the stop light switch wires at the connector. Remove the hairpin retainer Slide the stop light switch off from the brake pedal pin just far enough for the switch outer hole to clear the pin, and then remove the switch from the pin and booster push rod Be careful not to damage the switch during removal Slide the booster push rod and the nylon washers and bushing off the brake pedal pin (Figs 13 thru 15)

2. Open the hood and remove the master cylinder from the booster Secure it to one side without disturbing the hydraulic lines It is not necessary to disconnect the brake lines, but care should be taken that the brake lines are not deformed. Permanent deformation of brake lines can lead to tube failure.

3. Disconnect the manifold vacuum hose or hoses from the booster unit

4. Remove the booster-to-dash panel attaching nuts or bolts (Figs 13 thru 15) Remove the booster and bracket assembly from the dash panel, sliding the push rod link out from the engine side of the dash panel

5. On Torino and Montego models, remove the push rod link boot from the dash panel

Installation

1. On Torino and Montego models, install the push rod link boot in the hole in the dash panel as shown in Fig 14 Install the four spacers on the mounting studs

2. Mount the booster and bracket assembly to the dash panel by inserting the push rod or push rod link in through the hole and boot in the dash panel. Install the bracket-to-dash panel attaching lock nuts or bolts (Figs. 13 thru 15)

3. Connect the manifold vacuum hose or hoses to the booster

4. Before installing the master cylinder, check the distance from the outer end of the booster assembly push rod to master cylinder surface Turn the screw in or out to obtain the specified length. Refer to Part 12-01, Power Brake Master Cylinder Push Rod Adjustment Install the master cylinder and torque the attaching nuts to specifications

5. Working from inside the vehicle below the instrument panel, connect the booster push rod link to the brake pedal assembly To do this, proceed as follows:

Install the inner nylon washer, the booster push rod, and the bushing on the brake pedal pin Position the switch so that it straddles the push rod with the switch slot on the pedal pin and the switch outer hole just clearing the pin Slide the switch completely onto the pin, and install the nylon washer as shown in Figs 13 thru 15 Be careful not to bend or deform the switch Secure these parts to the pin with the hairpin retainer Connect the stop light switch wires to the connector, and install the wires in the retaining clip

BRAKE PEDAL

Ford, Mercury and Meteor

Removal

1. Disconnect the stop light switch wires at the connector

2. Remove the hairpin retainer. Slide the stop light switch off the brake pedal pin just far enough for the switch outer hole to clear the pin, and then lift the switch straight upward from the pin Be careful not to damage the switch during removal. Slide the master cylinder or booster push rod and the nylon washers and bushing off the brake pedal pin (Figs. 10 and 15).

3. Remove the hairpin-type retainer and washer from the brake pedal shaft, then remove the shaft, the brake pedal and the bushings from the pedal support bracket

Installation

1. Apply a coating of SAE 10 Engine oil to the bushings and locate bushings in their proper places on the pedal assembly and pedal support bracket (Figs 10 and 15).

2. Position the brake pedal assembly to the support bracket, then install the pedal shaft through the support bracket and brake pedal assembly. Install the retainer.

3. Install the inner nylon washer, the master cylinder or booster push rod, and the bushing on the brake pedal pin. Position the switch so that it straddles the push rod with the switch slot on the pedal pin and the switch outer hole just clearing the pin Slide the switch completely onto the pin, and install the nylon washer as shown in Figs 10 and 13. Be careful not to bend or deform the switch. Secure these parts to the pin with the hairpin retainer.

4. Connect the stop light switch wires to the connector, and install the wires in the retaining clip

5. Check the Brake Pedal Free Height and Travel Measurements, Part 12-01

Torino, Montego and Maverick— Manual-Shift Transmission

Removal

1. Remove the clutch pedal assist spring

2. Disconnect the clutch pedal-to-equalizer rod at the clutch pedal by removing the retainer and bushing

8003 0646

3. Remove the hairpin retainer. Slide the stop light switch off from the brake pedal pin just far enough for the switch outer hole to clear the pin, and then lift the switch straight upward from the pin Slide the master cylinder push rod and the nylon washers and bushing off from the brake pedal pin (Fig 13)

4. Remove the pivot bolt and nut that holds the pedal to the pedal support bracket Remove the brake pedal assembly from the pedal support bracket, and remove the bushings.

Installation

1. Apply a coating of SAE 10 engine oil to the bushings and locate all the bushings in their proper places on the pedal assembly (Fig 13)

2. Install the brake pedal assembly and bushings to the support bracket, and then install the pivot bolt through the support bracket and brake pedal assembly Install the pivot bolt nut and torque to specifications.

3. Install the inner nylon washer, the master cylinder push rod, and the bushing on the brake pedal pin Position the switch so that it straddles the push rod with the switch slot on the pedal pin and the switch outer hole just clearing the pin. Slide the switch completely onto the pin, install the outer nylon washer as shown in Fig 13. Secure these parts to the pin with the hairpin retainer

4. Connect the stop light switch wires to the connector, and install the wires in the retaining clip

5. Torque the booster mounting nuts to specifications

Lincoln Continental

Removal

1. Disconnect the battery ground cable from the battery

2. It is necessary to obtain clearance to remove vacuum hoses and the electrical connector to the temperature beat control box. Remove the two screws retaining the relay to the fender and push the relay aside Disconnect the vacuum hoses and connector at the heat control box

3. Working under the instrument panel, disconnect the vacuum hoses, wires and retaining clip from the temperature heat control box Remove the two screws securing the temperature control box to the dash panel

4. Remove the lower control housing retaining screws (6) Disconnect the wire harnesses at the lower control panel and place the panel aside Remove the wire harness shield Remove the wire harness clip Position the wire harness aside Remove the temperature control box and position it aside

5. Remove the hair-pin type retainer. Slide the stop light switch off the brake pedal pin just far enough for the switch outer hole to clear the pin. Lift the switch upward from the pin. Slide the master cylinder push rod, nylon washers and bushing off the brake pedal pin.

6. Remove the pivot bolt and nut that holds the pedal to the pedal support bracket Remove the brake pedal assembly from the support bracket and remove the bushings.

7. If required, remove the brake pedal pad retaining nuts and remove the brake pedal pad

Installation

1. If the brake pedal pad was removed, position the pad on the pedal Install the pad retaining nuts and torque them to specification

2. Apply SAE 10 engine oil to the bushings and locate all the bushings in their proper places on the pedal assembly.

3. Install the brake pedal assembly and bushings to the support bracket, and then install the pivot bolt through the support bracket and pedal assembly Install the pivot bolt nut and torque it to specification

4. Install the inner nylon washer, the master cylinder push rod link, and the bushing on the brake pedal pin Position the switch so that it straddles the push rod link with the switch slot on the pedal and the switch outer hole just clearing the pin. Install the outer nylon washer as shown in Fig 14 Install the hair-pin type retainer on the brake pedal pin.

5. Connect the stop light switch wires to the connector, and install the wires in the retaining clip

6. Position the wire harness and clip on the temperature control box and install the retaining screw. Position the temperature control box to the dash panel and install the two retaining bolts

7. Connect the vacuum lines and the electrical connector to the control box Position the wire harness to the control box and install the retaining clip

8. Position the wire harness shield and install two retaining bolts

9. Connect the wire harnesses to the lower control panel and install the retaining screws

10. Working within the engine compartment, connect the wire connector to the temperature heat control box

11. Position the relay to the fender apron and install the retaining bolts

12. Connect the ground cable to the battery

13. Check the brakes and light switch for proper operation Close the hood

8003 0648

5 MAJOR REPAIR OPERATIONS

After any service work, obtain a firm brake pedal before moving the vehicle. Riding the brake pedal (common on left foot application) should be avoided when driving the vehicle.

ROTOR REFINISHING

Rotunda Disc Brake Lathe FRE-1466-B, should be used to refinish the disc brake rotors The step-by-step resurfacing procedure provided with the tool must be adhered to

The finished braking surfaces of the rotor must be flat and parallel within 0 0007 inch, lateral runout must not exceed 0.003 inch on Custom Vehicles and 0 002 inch on Light Vehicles total indicator reading, and the surface finish of the braking surfaces are to be 80/15 micro inches The minimum limiting dimensions (Fig 16) from the inboard bearing cup to the outboard rotor face and from the inboard bearing cup to the inboard rotor face must be observed when removing material from the rotor braking surfaces On all models the limiting dimensions are to be measured with the ball and gage bar FRF-70370 (Rotunda KIT FRE-70170)

DISC BRAKE ROTOR CHECK

Refer to Fig. 16.

A ball and gauge bar are required to measure wear on the rotor inner braking surface and to determine the maximum stock removal limit when brake rotors require refinishing

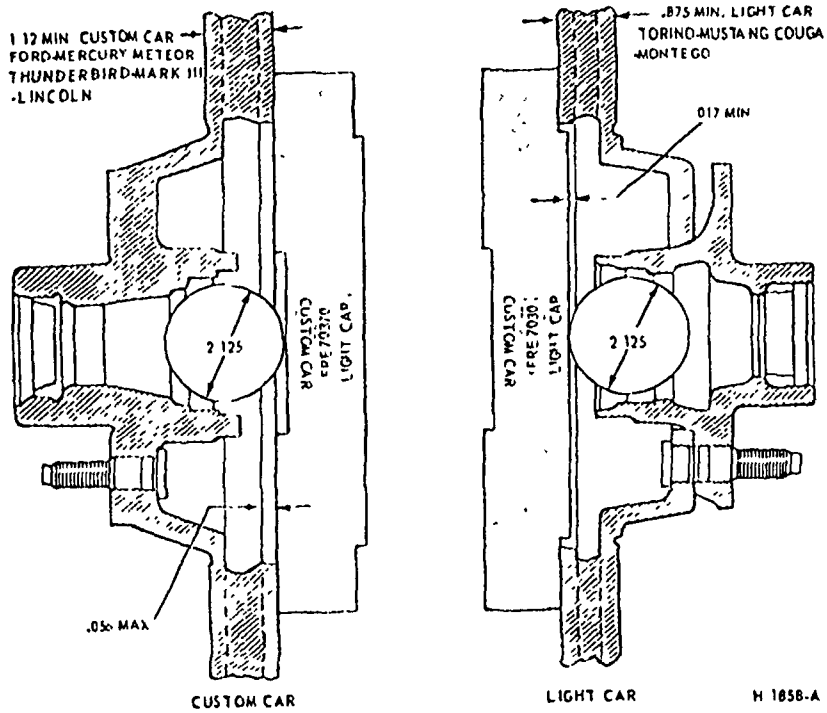

FIG. 16 Disc Brake Rotor Gauge Bar

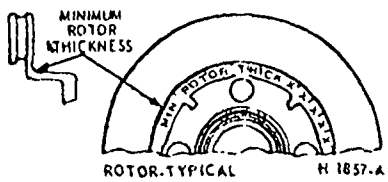

FIG 17 Disc Brake Rotor Minimum Thickness Marking Location

Gauging of the rotor is accomplished on the bench prior to mounting in a rotor lathe A controlled dimension notch machined in one edge of the gauge bar identified custom car (Ford, Mercury, Meteor and Thunderbird, Continental Mark III and Lincoln Continental). The opposite raised center of the gauge bar is identified light car (Maverick, Torino, Mustang and Cougar) Refer to Fig 16

Gauging of the rotor is accomplished according to the following procedure

1. Remove the inner bearing assembly and grease retainer and thoroughly clean the inner bearing cup and hub bore

2. Carefully place the gauge ball in the inner bearing cup (Do not drop).

3. Position the gauge bar across the rotor inner braking surface and over the gauge ball (Fig 16) Measure the distance between the gauge bar and ball This clearance is equal to the maximum allowable stock removal If the gauge bar touches the ball, no additional stock removal is allowed If the gauge bar is below the top of the ball, the rotor must be replaced

4. The rotor thickness dimensions after refinishing are limited to the minimum thickness shown on each rotor (Fig 17) If the minimum thickness is less than that shown on a rotor either by wear or after refinishing, the rotor must be replaced

Rotors having a thickness less than that shown on the rotor must be replaced regardless of the ball and gauge bar measurement.

5. The finished braking surface must be flat and parallel within 0 0007 inch, lateral runout must not exceed 0 003 inch on Custom Vehicles and 0 002 inch on Light Vehicles total indicator reading, and the surface finish of the braking area is to be 80/15 micro inches

The ball and gauge bar kit is available through Rotunda Equipment (Part No FRE-70170)

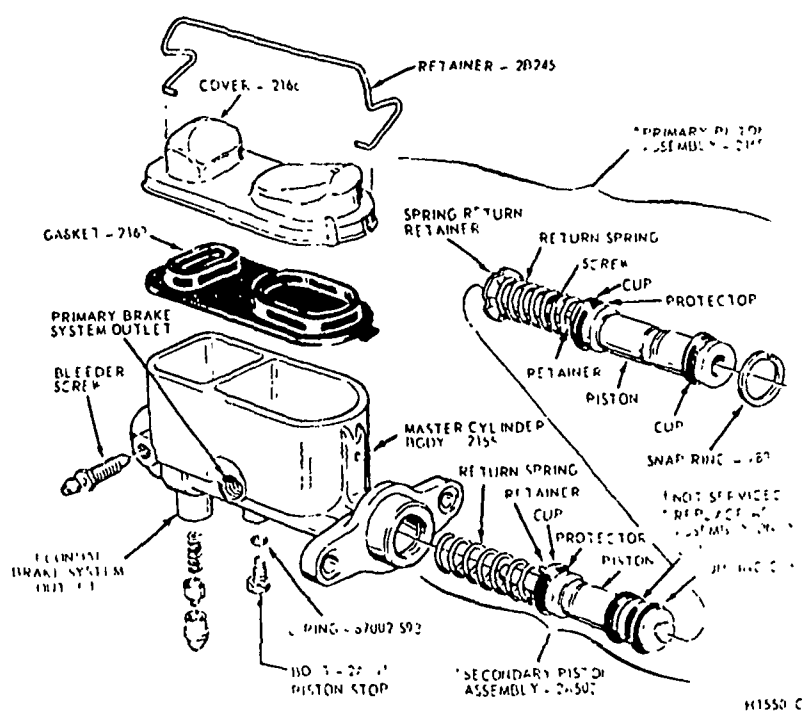

FIG 18 Dual Master Cylinder Disassembled

COATES

Clutch and Manual Transmission

GROUP 16

PART 16-02	PAGE	PART 16-10	PAGE
Clutch	16-02-01	General Manual Transmission Service	16-10-01
PART 16-03		PART 16-22	
Mechanical Clutch Linkage	16-03-01	Ford of Germany Four Speed Transmission	16-22-01

PART 16-02 Clutch

COMPONENT INDEX	Page		COMPONENT INDEX	Page
CLUTCH			*Installation*	16-02-01
Description	16-02-01		Removal	16-02-01

1 DESCRIPTION

The clutch is a centrifugal single dry disc type. It consists of the clutch disc, pressure plate and clutch release bearing.

4 REMOVAL AND INSTALLATION

CLUTCH

Removal

1. From inside the car, remove the shift lever by bending the locking tabs, removing the C clip and unscrewing the lever from the transmission extension housing.
2. Raise the vehicle on a hoist.
3. Disconnect the drive shaft at the U-joint flange. Slide the drive shaft off the transmission output shaft. Use the proper tool over the output shaft and into the extension housing bushing to prevent loss of transmission lubricant.
4. Disconnect the speedometer cable from the transmission housing.
5. Disconnect the lower end of the clutch cable from the clutch release lever (Fig. 1).
6. Remove the starter cable, then remove the starter motor from the flywheel housing.
7. Remove the bolts that attach the engine rear plate to the front lower part of the flywheel housing.
8. Remove the bolt attaching the engine rear support. Also remove the crossmember attaching bolts. Remove the crossmember from the vehicle.
9. Remove the bolts that attach the flywheel housing to the cylinder block.
10. Move the transmission and flywheel assembly rearward until the housing clears the clutch pressure plate. Lower the transmission and flywheel housing away from the vehicle.
11. Loosen the six pressure plate cover attaching bolts evenly to release the spring tension gradually and avoid distorting the cover. If the same pressure plate and cover is to be reused, mark the cover and flywheel so that the pressure plate can be reinstalled in its original position.
12. Remove the pressure plate and clutch disc from the flywheel.

Installation

1. Fill the grease groove of the release bearing hub with lithium base grease. Clean all excess grease from inside the bore of the bearing hub.
2. Position the clutch release bearing on the release lever.
3. Attach the release lever and release bearing to the flywheel housing.
4. Position the clutch disc and pressure plate assembly to the flywheel. The three dowel pins on the flywheel must be properly aligned with the pressure plate. Start the cover attaching bolts but do not tighten them. Avoid touching the clutch disc face.

PROPERTY OF FORD MOTOR COMPANY
COATES V FORD 9 - 0229