INSTRUMENT FUNCTION OUTLINE

DEPARTMENT 246

TITLE #2 STILL VACUUM CONTROL

LOOP NUMBER 101

SHEET 2 OF 5

CLASSIFICATION PRC-101

2.0 COMPONENT AND CALIBRATION DATA

OPERATING DATA

MECHANICAL DATA

A. TRANSMITTER

LOCATION: ABOVE AND NORTH-WEST OF #2 STILL ON 3RD FLOOR.

AIR SUPPLY: 20 PSIG.

OUTPUT: 3-15 PSIG.

B. CONTROLLER RECORDER

LOCATION: PANEL BOARD IN CONTROL ROOM.

ITEM NO: 29-3353

SETPOINT: 40 MM
SPAN: 0-100
CHART NO: TA-470
STOREROOM CODE: 31-7506

C. CONTROL VALVE

LOCATION: Top Level, North SIDE

ACTION: AIR TO OPEN

D, E, F & G. THERMOCOUPLES

LOCATION: D - FOLLOW LOW UNDER CONDENSER

E - VAPOR, 1 FOOT ABOVE STILL

F - INLET TO #2 FURNACE

G - OUTLET OF #2 FURNACE

PCB-ARCH-EXT0373188

INSTRUMENT FUNCTION OUTLINE

DEPARTMENT 246

TITLE #2 STILL VACUUM CONTROL

LOOP NUMBER 101

SHEET 3 OF 5

CLASSIFICATION PRC-101

Written by V. Brawley Date 3/3/69 Rev. by _____ Date _____ Rev. Number _____

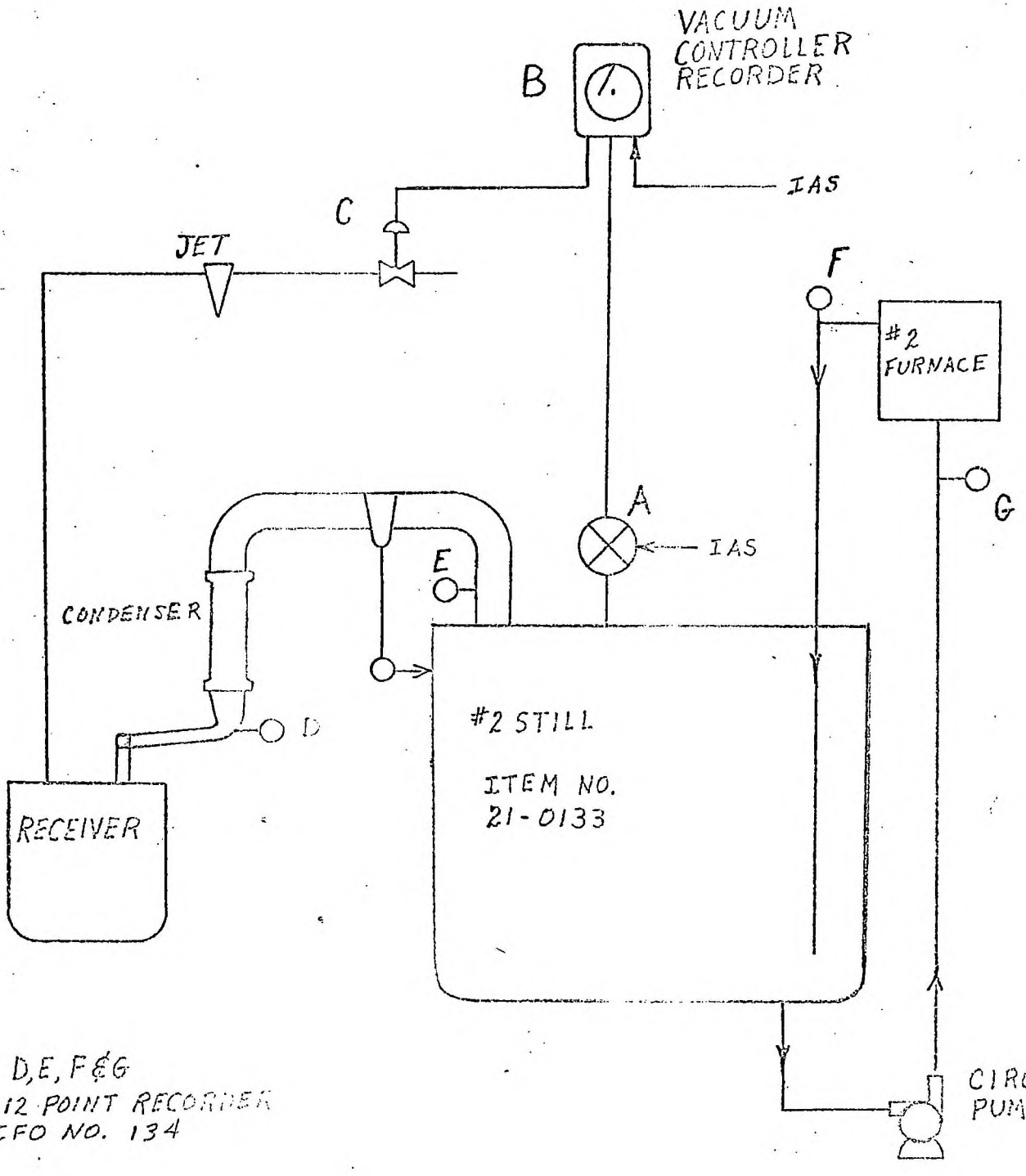

D, E, F & G TO 12 POINT RECORDER IFO NO. 134

PCB-ARCH-EXT0373189

INSTRUMENT FUNCTION OUTLINE

DEPARTMENT 246

TITLE #2 STILL VACUUM CONTROL

LOOP NUMBER 101

SHEET 4 OF 5

CLASSIFICATION PRC-101

Written by V. Brawley Date 3/3/69 Rev. by _____ Date _____ Rev. Number _____

3.0 Operation of Loop

3.1 Normal Operation

3.1.1 Start-Up Instructions

NO SPECIAL INSTRUCTIONS OTHER THAN OPERATING INSTRUCTIONS

3.1.2 Shut-Down Instructions

THE FIRES MUST BE CUT OFF THE FURNACE IF VACUUM CAN NOT BE CONTROLLED AT 40 M M.

3.1.3 Normal Operating Instructions

VACUUM SHOULD BE ON 40 M M

3.1.4 Routine Checks Required

CHECK AS OFTEN AS NECESSARY TO BE SURE VACUUM IS CONTROLLING ON 40 M M.

PCB-ARCH-EXT0373190

INSTRUMENT FUNCTION OUTLINE

DEPARTMENT 246

TITLE #2 STILL VACUUM CONTROL

LOOP NUMBER 101

SHEET 5 OF 5

CLASSIFICATION PRC-101

Written by V. Brandy Date 3/3/69 Rev. by _____ Date _____ Rev. Number _____

3.2 INTERLOCKS

NONE

3.3 ABNORMAL OPERATION

3.3.1 AIR FAILURE

Air failure will cause the recorder to read zero, but vacuum on the still will pull down below 40 mm because the control valve will close.

3.3.2 POWER FAILURE

Power failure will not affect the loop but the chart will not turn.

3.3.3 OTHER

NONE

PCB-ARCH-EXT0373191

INSTRUMENT FUNCTION OUTLINE

DEPARTMENT 246

TITLE #2 RECEIVER LEVEL RECORDER

LOOP NUMBER 102

SHEET 1 OF 5

CLASSIFICATION LR - 102

Written by V. Brawley Date 2/26/69 Rev. by _____ Date _____ Rev. Number _____

1.0 NEED FOR LOOP

this loop is needed to measure the level in the receiver so it can be pumped out before it is so full it interfers with the vacuum on the still.

1.1 DESCRIPTION OF LOOP

1.1.1 FUNCTION

the function of this loop is to measure and record the level in the receiver.

1.1.2 ACCURACY REQUIRED

the accuracy required is ± 5 % of the full mark on the recording chart.

1.1.3 ACCOMPLISHMENT OF FUNCTION

the level is sensed by a dp cell that measures back pressure of air fed into the receiver through rotameters. The output of the transmitter goes to a recorder.

PCB-ARCH-EXT0373192

INSTRUMENT FUNCTION OUTLINE

DEPARTMENT 246

TITLE #2 RECEIVER LEVEL RECORDER

LOOP NUMBER 102

SHEET 2 OF 5

CLASSIFICATION LR-102

2.0 COMPONENT AND CALIBRATION DATA

OPERATING DATA

A. DIP PIPE.
LOCATION: TOP OF #2 RECEIVER

B. ROTOMETERS
SPAN: 0 - 2.5
SETPOINT: 2.0

C. TRANSMITTER
LOCATION: TOP OF RECEIVER
AIR SUPPLY: 20 PSIG
OUTPUT: 3-15 PSIG

D. RECORDER
LOCATION: PANEL BOARD IN CONTROL ROOM
ITEM NO: 29-7607
SPAN: 0-60
CHART NO: FX237 (R[illegible]-181)
STORE ROOM CODE: 31-3889

E. THERMOCOUPLE
LOCATION: TOP OF RECEIVER

F. THERMOWELL
LOCATION: IN TOP OF #2 RECEIVER

MECHANICAL DATA

PCB-ARCH-EXT0373193

INSTRUMENT FUNCTION OUTLINE

DEPARTMENT 216

TITLE #2 RECEIVER LEVEL RECORDER

LOOP NUMBER 102

SHEET 3 OF 5

CLASSIFICATION LR-102

Written by V. Brunka Date 2/26/69 Rev. by _____ Date _____ Rev. Number _____

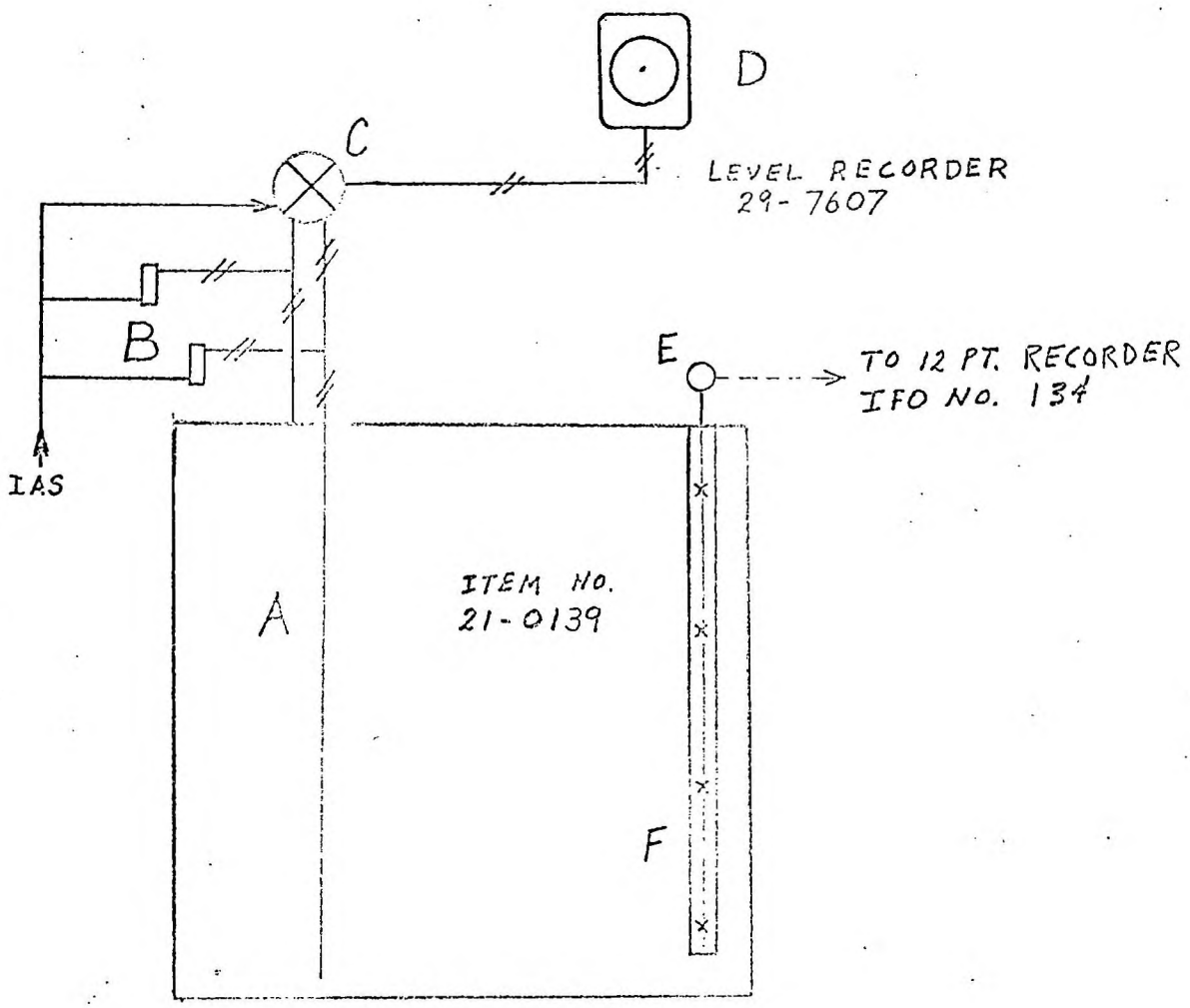

PCB-ARCH-EXT0373194

INSTRUMENT FUNCTION OUTLINE

DEPARTMENT 246

TITLE #2 RECEIVER LEVEL RECORDER

LOOP NUMBER 102

SHEET 4 OF 5

CLASSIFICATION LR-102

Written by V. Brawley Date 2/24/69 Rev. by _____ Date _____ Rev. Number _____

3.0 Operation of Loop

3.1 Normal Operation

3.1.1 Start-Up Instructions

turn air on the two rotometers until the "BB" is on 2.0.

3.1.2 Shut-Down Instructions

turn off air to the two rotometers

3.1.3 Normal Operating Instructions

Air on rotometers should be on 2.0.

3.1.4 Routine Checks Required

Check air on rotometers once each shift

PCB-ARCH-EXT0373195

INSTRUMENT FUNCTION OUTLINE

DEPARTMENT 246

TITLE # 2 RECEIVER LEVEL RECORDER

LOOP NUMBER 102

SHEET 5 OF 5

CLASSIFICATION LR - 102

Written by V. Brawley Date 2/26/69 Rev. by _____ Date _____ Rev. Number _____

3.2 INTERLOCKS

NONE

3.3 ABNORMAL OPERATION

3.3.1 AIR FAILURE

Air failure will make the recorder read zero due to no back pressure sensed by the dp cell.

3.3.2 POWER FAILURE

Power failure will not affect the loop but the recording chart will not turn.

3.3.3 OTHER

NONE

PCB-ARCH-EXT0373196

INSTRUMENT FUNCTION OUTLINE | DEPARTMENT 246

TITLE West Bi Ø TANK TEMP CONTROL | LOOP NUMBER 106

SHEET 1 OF 5 | CLASSIFICATION TC-106

Written by V. Brawley Date 2/26/69 Rev. by _____ Date _____ Rev. Number _____

1.0 NEED FOR LOOP

this loop is needed to keep the biphenyl above the crystallizing point (68°C) but below the flash point (C.C. 112°C).

1.1 DESCRIPTION OF LOOP

1.1.1 FUNCTION

the function of this loop is to control the temperature of the biphenyl in the tank.

1.1.2 ACCURACY REQUIRED

this system should control the temperature in the tank ± 10°C of the valve set point.

1.1.3 ACCOMPLISHMENT OF FUNCTION

the temperature is sensed through a capillary tube system that sends a signal to the self-contained temperature control valve.

PCB-ARCH-EXT0373197

INSTRUMENT FUNCTION OUTLINE

TITLE WEST B.Ø TANK TEMP CONTROL

SHEET 2 OF 5

DEPARTMENT 246

LOOP NUMBER 106

CLASSIFICATION TC-106

2.0 COMPONENT AND CALIBRATION DATA

OPERATING DATA

A. THERMOWELL.
LOCATION: TOP OF TANK.

B. SELF-ACTING CONTROL VALVE.
LOCATION: TOP OF TANK.
SET POINT: 100°C

C. THERMOCOUPLE.
LOCATION: TOP OF TANK.

D. THERMOWELL.
LOCATION: TOP OF TANK.

MECHANICAL DATA

PCB-ARCH-EXT0373198

INSTRUMENT FUNCTION OUTLINE

DEPARTMENT 246

TITLE WEST BIØ TANK TEMP CONTROL

LOOP NUMBER 106

SHEET 3 OF 5

CLASSIFICATION TC-106

Written by Y. Brumley Date 2/26/62 Rev. by _____ Date _____ Rev. Number _____

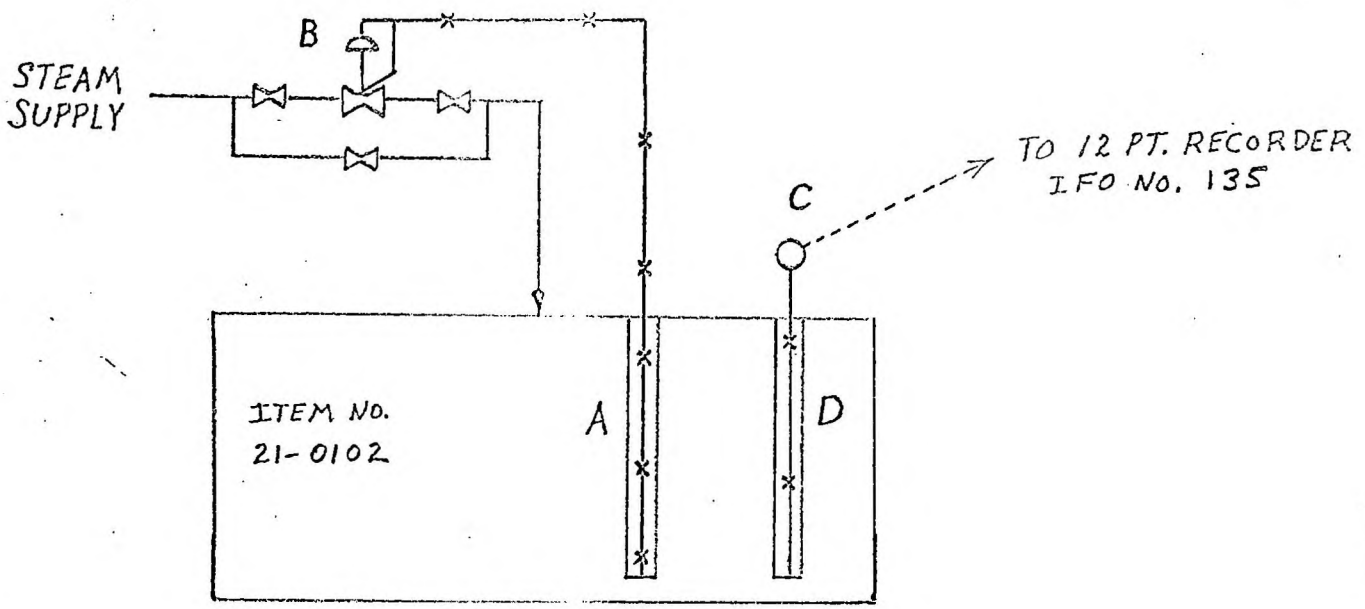

PCB-ARCH-EXT0373199

INSTRUMENT FUNCTION OUTLINE

DEPARTMENT 246

TITLE WEST BIO TANK TEMP CONTROL

LOOP NUMBER 106

SHEET 4 OF 5

CLASSIFICATION TC-106

Written by V. Brawley Date 2/26/69 Rev. by _____ Date _____ Rev. Number _____

3.0 Operation of Loop

3.1 Normal Operation

3.1.1 Start-Up Instructions

By-pass on steam valve must be closed.

3.1.2 Shut-Down Instructions

NONE

3.1.3 Normal Operating Instructions

By-pass on steam line must be closed.

3.1.4 Routine Checks Required

Once a day the temperature on the 2 point recorder should be checked. IFO NO 135, pointer #11. (ITEM NO. 29-65[illegible]).

PCB-ARCH-EXT0373200

INSTRUMENT FUNCTION OUTLINE

DEPARTMENT 246

TITLE WEST RIO TANK TEMP CONTROL

LOOP NUMBER 106

SHEET ____ OF ____

CLASSIFICATION TC-106

Written by V. Brandt Date 2/26/69 Rev. by ____ Date ____ Rev. Number ____

3.2 INTERLOCKS

NONE

3.3 ABNORMAL OPERATIONS

3.3.1 AIR FAILURE

air failure will not affect this loop.

3.3.2 POWER FAILURE

Power failure will not affect the temp control, but the 12 point recorder, IFO No. 135, will not operate. (ITEM NO: 29-6638).

3.3.3 OTHER

NONE

PCB-ARCH-EXT0373201

INSTRUMENT FUNCTION OUTLINE — DEPARTMENT 246

TITLE #1 RECEIVER LEVEL RECORDER — LOOP NUMBER 105

SHEET 1 OF 5 — CLASSIFICATION LR-105

Written by V. Brawley Date 2/26/69 Rev. by _____ Date _____ Rev. Number _____

1.0 NEED FOR LOOP

This loop is needed to measure the level in the receiver so it can be pumped out before it is so full it interferes with the vacuum on the still.

1.1 DESCRIPTION OF LOOP

1.1.1 FUNCTION

The function of this loop is to measure and record the level in the receiver.

1.1.2 ACCURACY REQUIRED

The accuracy required is ± 5% of the full mark on the recording chart.

1.1.3 ACCOMPLISHMENT OF FUNCTION

The level is sensed by a dp cell that measures back pressure in a dip pipe. ~~The output of the transmitter goes to~~ a recorder.

of air fed to the receiver through rotometers.

The output of the transmitter goes to a recorder.

PCB-ARCH-EXT0373202

INSTRUMENT FUNCTION OUTLINE

TITLE #1 RECEIVER LEVEL RECORDER

SHEET 2 OF 5

DEPARTMENT 246

LOOP NUMBER 105

CLASSIFICATION LR-105

2.0 COMPONENT AND CALIBRATION DATA

OPERATING DATA

A. DIP PIPE
LOCATION: TOP OF #1 RECEIVER

B. ROTOMETERS
SPAN: 0 - 2.5
SETPOINT: 2.0

C. TRANSMITTER
LOCATION: TOP OF RECEIVER
AIR SUPPLY: 20 PSIG
OUTPUT: 3-15 PSIG.

D. RECORDER
LOCATION: PANEL BOARD IN CONTROL ROOM
ITEM NO: 29-7607
SPAN: 0-60
CHART NO: FX237 (892421)
STOREROOM CODE NO: 31-3889

E. THERMOCOUPLE
LOCATION: TOP OF RECEIVER

F. THERMOWELL
LOCATION: IN TOP OF #1 RECEIVER

MECHANICAL DATA

PCB-ARCH-EXT0373203

INSTRUMENT FUNCTION OUTLINE

DEPARTMENT 246

TITLE #1 RECEIVER LEVEL RECORDER

LOOP NUMBER 105

SHEET 3 OF 5

CLASSIFICATION LR-105

Written by V. Brandon Date 2/26/69 Rev. by _____ Date _____ Rev. Number _____

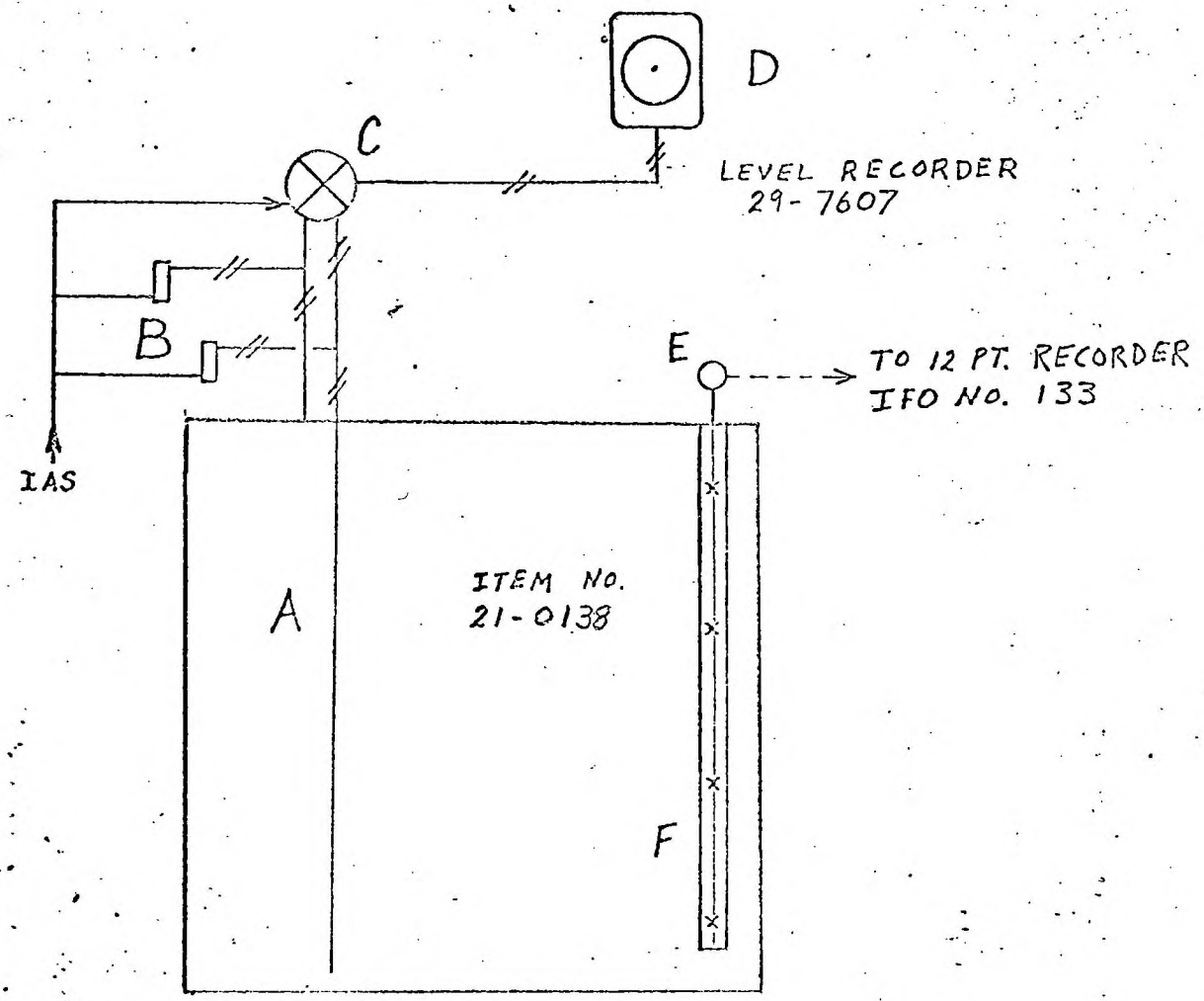

PCB-ARCH-EXT0373204

INSTRUMENT FUNCTION OUTLINE — DEPARTMENT 246

TITLE #1 RECEIVER LEVEL RECORDER — LOOP NUMBER 105

SHEET 4 OF 5 — CLASSIFICATION LR-105

Written by V. Rand Date 2/24/69 Rev. by _____ Date _____ Rev. Number _____

3.0 Operation of Loop

3.1 Normal Operation

3.1.1 Start-Up Instructions

turn air on the two rotometers until the "BB" is on 2.0.

3.1.2 Shut-Down Instructions

turn off air to the two rotometers

3.1.3 Normal Operating Instructions

Air on rotometers should be on 2.0.

3.1.4 Routine Checks Required

Check air on rotometers once each shift

PCB-ARCH-EXT0373205

INSTRUMENT FUNCTION OUTLINE

DEPARTMENT 246

TITLE #1 RECEIVER LEVEL RECORDER

LOOP NUMBER 105

SHEET 5 OF 5

CLASSIFICATION LR-105

Written by V. Brawley Date 2/28/69 Rev. by _____ Date _____ Rev. Number _____

5.2 INTERLOCKS

NONE

3.3 ABNORMAL OPERATIONS

3.3.1 AIR FAILURE

Air failure will make the recorder read zero due to no back pressure sensed by the dp cell.

3.3.2 POWER FAILURE

Power failure will not affect the loop but the recording chart will not turn.

3.3.3 OTHER

NONE

PCB-ARCH-EXT0373206