PLAINTIFF'S EXHIBIT
CT-1582

TECHNICAL SPECIFICATIONS

CertainTeed

CertainTeed Corporation
Pipe and Plastics Group

SPECIFICATIONS CLASSIFICATION: A/C Standard Purchasing Specification		
T.C.O. REF. NO.	SPECIFICATION NO:	PAGE NO.:
1	564	1
SUPERSEDES:		DATE OF ISSUE: MAR 8 1979

DESCRIPTION:

Outside Purchased A/C Sewer Fittings

1.0 General

The A/C Sewer Fittings described in this specification are of CertainTeed's design and are compatible with CertainTeed's A/C Sewer Pipe. They employ the same design criteria as CertainTeed's own fittings fabrication and use existing sewer rings and certa-spacers (also of CertainTeed's design).

2.0 Use

The sewer fittings covered by this specification are designed for Use with A/C Sewer Pipe. Described are Couplings, Tees, Wyes, Elbows and various adaptors.

3.0 Materials

3.1 All fittings shall be made from material which meets the requirements of ASTM C644, or ASTM C428 and Federal Specification SS-P-331d (latest issues). This includes composition and all chemical and physical requirements.

Vendors who purchase materials for fabrication shall assume the responsibility of assuring that the materials they purchase meet these specifications.

A file of records or certifications of conformance to the above ASTM's and Federal specification, for materials made or purchased by the fabricator, shall be maintained for inspection upon request.

4.0 Lot Size

For sampling and inspection purposes, a lot shall be defined as the quantity of all fittings shipped on one order, received at one time, and identified by a Purchase Order Number.

CTD015213

PREPARED BY:	APPROVED BY:	R & D	MFG.	SALES	I.E.	OTHERS
JBN						

5.0 Requirements

5.1 Special

After approval of this specification, no change in the design or dimensions shall be made without authorization, in writing, from the A/C Standards/Quality Control Department of P&PG. When such a change is authorized, the changes shall be recorded in a revision of the specification. The manufacturer shall notify P&PG's Purchasing Department when such an authorized change is actually placed into effect.

5.2 Manufacturers/Fabricators Inspection

The vendor is responsible for removing damaged/defective fittings from each shipment before shipment is made. All fittings are to be shipped on a first-in first-out basis, i.e. oldest fittings shipped first.

5.3 Manufacturers/Fabricators Control Data

The manufacturer/Fabricator shall keep records on all aspects of his production including dimensional and physical tests on the fittings.

5.4 Appearance and Workmanship of Materials Prior to Fabrication

The following definitions and requirements are applicable to finished product quality. They are significant due to a) difficulty in assembling, b) failure in service, c) requirements of outside agencies, d) for cosmetic reasons. All couplings and fittings must conform to these requirements.

1. Damaged Pipe or Coupling Material

   Any outside surface irregularity that give an unsatisfactory appearance. Usually occurs from mishandling. Refers to the outside unmachined area. "Tray Damage", "Flats", and "Board Marks" are some varieties of Damaged Pipe or Coupling material, as are "Gouges" (depressions) on the outside surface.

   A. Reject if inside diameter at depression or protrusion varies by over 3/16" from adjacent diameter, or if from 1/16" to 3/32" and length of depression or protrusion exceeds diameter.

   B. Reject if depression penetrates over 1/8" on outside surface.

C. Examine for cracks. Reject if any cracks regardless of size.

2. Rough Bore

A torn section on the inside surface; a portion of the inside surface with a rough texture. "Pulled Bore" is also grouped in this definition. The distinction is in the situation that caused the defect and in the direction of the roughness.

A. Reject if depth exceeds 1/8" and/or area in square inches exceeds 2X pipe diameter in inches, or extends over 1/3 or more of circumference.

B. Look also for delaminations

3. Cracks

A break in any surface of the pipe or coupling material without separation, such that the length is determinable, the width is negligible, and the depth is not visibly ascertainable. A "hair line crack" is more difficult to observe. It resembles "crazing" in a coffee cup.

A. Accept hairline cracks or crazing in water marked area.

B. Reject any other crack at any location.

4. Delaminated

A separation of one or more layers comprising the pipe or coupling material structure, usually visible at the ends. "Loose skin laminations" are visible on the outside surface. ("Cracks" are usually observed as extending in from surface of barrel or bore, while delaminated is usually observed as parallel with surface of barrel or bore.)

CTD015215

A. Accept if delaminations are next to inside surface and within 1/16" of inside surface on sizes 6" or less; within 1/8" on sizes 8" and above.

5. Water Marks

A discolored, marbled appearance on the inside surface of the pipe or coupling stock with slight and tiny cracks, fissures, or flaking, or visible material separation.

A. Accept hairline cracks.

B. Reject if marking covers entire diameter.

C. Examine water-marked pipe or coupling to determine if any sub-surface delaminations, and reject if they exist. (Destroy one if necessary to determine this.)

6. Silica Spots

Any non-homogenized portion of the cement-silica-fiber blend visible on the inside surface or on the machined area of the pipe. Sometimes called "white spots" or "lime spots".

A. Acceptable on inside surface.

B. Reject if any are found on outside surface in area from pipe end to within ½" of inner edge of $O.D._1$ zone.

7. Dents

Smooth, externally caused bulges or recesses on the inside surface of the pipe or couplings.

A. Reject if inside diameter at dented area varies by 3/16" or more from adjacent inside diameter on all sizes.

B. On any dent look for cracks or structural failure and reject if noted.

8. Gouges

A scooped out section on the barrel or bore of the pipe or on a machined surface of pipe or couplings.

A. Reject if depth exceeds 3/16" or length exceeds diameter on all sizes.

B. No gouge allowed on any machined surface.

CTD015216

9. Not Machined Clean

Surface irregularities on the machined surface that may adversely affect assembly, handling, or sealing, or are of poor appearance. This definition applies also to "Bad Cut", "Chatter", "Chipped", and some "Flaking". These terms are more precisely descriptive.

A. Reject if machined surface is not free of circumferential or helical grooves or scratches.

10. Damaged Ends

Breaks, chips, or flaking in the beveled area of the pipe.

A. Reject if any chips or flaking on outside edge that extend back over ½" bevel from edge, or extend over ½" around the perimeter at any one location or are deeper than 1/8".

B. Reject on inside edge for any chips of length or width of over 1" or of depth over 1/8".

11. Foreign Material

Anything other than cement, silica, or fiber noticed on the surface of the pipe.

A. Reject if found.

5.5 Dimensions

The dimensions should be as shown on the following pages:

6.0 Finished Fitting Requirements

In addition to the material and dimensional requirements, finished fittings shall be checked for the following:

1) Evidence of Fishmouth on those fittings which are prebelled.

CTD015217

2) Presence, location and straightness of Certa-spacer where applicable.

3) Correctness, completeness and legibility of markings.

4) The workmanship of the epoxy bond on fabricated fittings.

5) Finished fittings shall be free of loose or hanging chips and lace curtains.

6) There shall be no sharp edges

7.0 Acceptance and Rejection

P&PG reserves the right to reject any lot or lots found not conforming to the requirements of this specification. Such rejection shall be accomplished within a reasonable period following date of delivery. In the event of a rejection, the vendor shall be given the opportunity to inspect representative samples of the rejected material. The vendors must express his desire to inspect rejected material within seven (7) days after notification of the rejection, and the physical inspection must be performed within 30 days.

8.0 Packaging

Fittings shall be shipped in cartons, crates, shrink wrap pallets, etc. of the vendors design, provided they are of suitable size and strength to prevent damage from normal shipping and handling and facilitate stacking. Package shall be labelled as per its contents.

9.0 Marking

All markings shall be stamped or stencilled in Block letters in green ink. The ink shall be able to withstand weathering. The letters shall be large enough to be easily visible and readable to the naked eye.

A marking code letter has been assigned to each vendor which is to be part of each items marking.

Also, each vendor shall stamp or stencil on each item the country in which it is manufactured.

Couplings

At the approximate center around the coupling, the following shall be shown:

CERTAINTEED
SIZE - CLASS
FLUID-TITE SEWER

Note: The last line shall read FLUID-TITE CG-S Sewer for coupling markings on 15 and 21 inch until the new FLUID-TITE design change is made.

TECHNICAL SPECIFICATIONS

CertainTeed

CertainTeed Corporation
Pipe and Plastics Group

SPECIFICATIONS CLASSIFICATION: A/C Standard Purchasing Specification		
T.C.O. REF. NO.	SPECIFICATION NO:	PAGE NO.:
1	564	7
SUPERSEDES:		DATE OF ISSUE: MAR 8 1979

DESCRIPTION:

Outside Purchased A/C Sewer Fittings

Fittings

Fitting markings are shown on the individual pages along with the fitting.

10.0 Special Information

1) Rings and Certa-spacers as required will be supplied to the vendor via CertainTeed's Ambler plant (only those fittings which are prebelled by the vendor or otherwise specified require rings and certa-spacers).

2) All fittings are to be shipped to the Ambler plant for inspection purposes. No fittings shall be shipped directly to a job without authorization from CertainTeed's Marketing and Quality Control Departments.

3) This specification and the information it contains is the property of CertainTeed. Under no circumstancesshall this specification or dimensional details herein be released to any unauthorized persons.

CTD015219

PREPARED BY:	APPROVED BY:	R & D	MFG.	SALES	I.E.	OTHERS

Standard Pipe

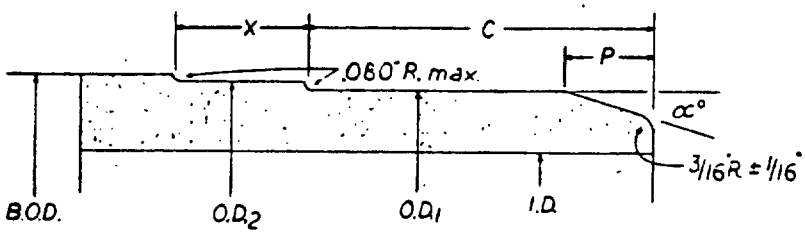

Dimensions

Pipe Size, Inches	Nom. I.D."	O.D.1"	O.D.2"	X" ±.06"	C" ±.06"	t" Min.	B.O.D." Min. Class 1500	Class 2400	Class 3300	Class 4000	Class 5000	Class 6000	Class 7000
4	4.00	4.62	4.78	1.15	2.09	.20	4.81	4.87	5.01				
5	5.00	5.66	5.82	1.15	2.09	.22	5.91	5.98	6.20				
6	6.00	6.66	6.82	1.15	2.09	.24	6.91	7.04	7.22				
8	8.00	8.80	8.96	1.15	2.44	.27	9.00	9.06	9.24				
10	10.00	10.89	11.05	1.15	2.81	.30	11.14	11.14	11.30	11.45	11.58		
12	12.00	12.99	13.15	1.15	2.81	.33	13.24	13.24	13.46	13.54	13.70		
14	14.00	15.07	15.23	1.15	3.06	.36	15.32	15.32	15.50	15.64	15.84		
15	15.00	16.11	16.27	1.50	3.25	.39	16.36	16.36	16.56	16.72	16.94		
16	16.00	17.15	17.31	1.15	3.06	.41	17.42	17.42	17.60	17.74	17.98		
18	18.00	19.23	19.48	1.15	3.81	.44		19.60	19.80	20.00	20.20	20.43	20.63
20	20.00	21.29	21.54	1.15	3.81	.48		21.66	21.88	22.10	22.32	22.55	22.77
21	21.00	22.37	22.53	1.50	3.75	.52		22.74	22.94	23.18	23.40	23.63	23.85
24	24.00	25.51	25.76	1.15	3.81	.56		25.88	26.12	26.36	26.60	26.79	27.03

Tolerance: O.D.1" and O.D.2" 4" through 16" ±.02"
18" through 24" ±.03"

Pipe Size, Inches	αC° ±2°	P" ±.06"
4,5 and 6	14	.50
8	16	.50
10 and 12	16	.62
14 and 16	18	.62
18, 20, & 24	20	.75
15	15	1.00
21	18	1.00

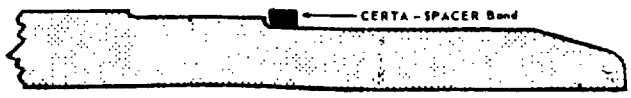

Certa-spacer bands are to be applied to pipe ends as shown above for the prebelled end of Wyes and Tees, and one end of each elbow. The band should be against the O.D.2 shoulder. (Bands may be heated to ease placement.)

TECHNICAL SPECIFICATIONS

CertainTeed

CertainTeed Corporation
Pipe and Plastics Group

SPECIFICATIONS CLASSIFICATION:		
A/C Standard Purchasing Specification		
T.C.O. REF. NO.	SPECIFICATION NO:	PAGE NO.:
1	564	9
SUPERSEDES:		DATE OF ISSUE: MAR 8 1979

DESCRIPTION:

Outside Purchased A/C Sewer Fittings

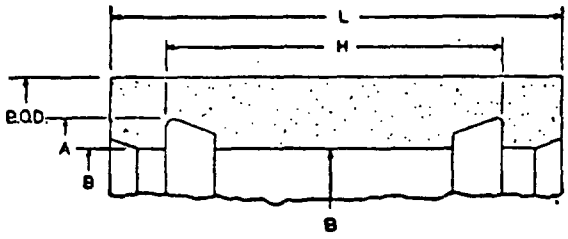

All Couplings except 15" and 21"

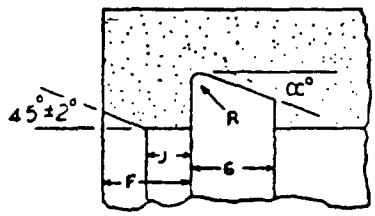

Standard Coupling

15" and 21" Coupling Sizes only

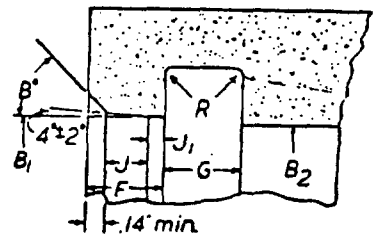

Dimensions

B.O.D." +.25" -.00"

Coupling Size, In.	A"	B"	H" +.00" -.06"	L" +.25" -.00"	Class 1500	Class 2400	Class 3300	Class 4000	Class 5000	Class 6000	Class 7000
4	5.24	4.71	3.50	4.75	5.92	5.92	6.00				
5	6.28	5.75	3.50	4.75	7.06	7.06	7.14				
6	7.28	6.75	3.50	4.75	8.12	8.12	8.20				
8	9.55	8.89	4.00	5.75	10.50	10.50	10.59				
10	11.64	11.00	4.75	6.50	12.75	12.75	12.75	13.00	13.00		
12	13.74	13.10	4.75	6.50	15.00	15.00	15.00	15.24	15.24		
14	15.87	15.19	5.25	7.00	17.15	17.15	17.15	17.48	17.48		
15			7.13	8.90	18.26	18.26	18.26	18.61	18.61		
16	17.95	17.27	5.25	7.00	19.31	19.31	19.31	19.68	19.68		
18	20.48	19.36	6.50	8.25		21.63	21.63	22.09	22.09	22.47	22.47
20	22.54	21.42	6.50	8.25		23.81	23.81	24.15	24.15	24.67	24.67
21			8.13	9.90		24.96	24.96	25.26	25.26	25.81	25.81
24	26.70	25.64	6.50	8.25		28.22	28.22	28.69	28.69	29.15	29.15

	A"	B_1"	B_2"
15	16.81	16.43	16.24
21	23.07	22.69	22.50

Tolerance: A and B - 4" through 16" ±.025"
18" through 24" ±.040"

A, B_1, and B_2 = 15" +.050" -.020"
21" ±.040"

CTD015221

Coupling Size, In.	F" Min.	G* +.04" -.00"	J"* +.03" -.00"	R"* +.01"	α° ±2°	J_1" +.02" -.00"	β° ±2°
4", 5" & 6"	.50	.50	.35	.156	13		
8", 10", 12", 14", 16"	.75	.62	.50	.200	18		
18", 20", 24"	.75	1.00	.63	.250	12		
15", 21"	.76	1.11	.42	.060	--	.18	45

* Tolerance 15" and 21"

G" = ±.03"
J" = ±.00" -.04"
R" = Max.

PREPARED BY:	APPROVED BY:	R & D	MFG.	SALES	I.E.	OTHERS

SLEEVE ADAPTOR

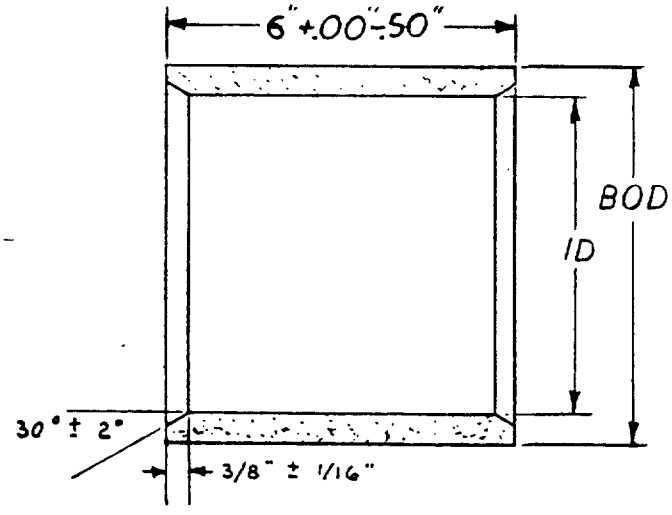

Dimensions

Pipe Size, Inches	I.D.2" ±.030"	B.O.D." Min.
4	5.45	6.42
5	6.50	7.50
6	7.50	8.67

Marking Example:

CERTAINTEED
4"SEWER SLEEVE
ADPT.

TECHNICAL SPECIFICATIONS

CertainTeed

CertainTeed Corporation
Pipe and Plastics Group

SPECIFICATIONS CLASSIFICATION: A/C Standard Purchasing Specification		
T.C.O. REF. NO.	SPECIFICATION NO:	PAGE NO.:
1	564	11
SUPERSEDES:		DATE OF ISSUE: MAR 8 1979

DESCRIPTION:

Outside Purchased A/C Sewer Fittings

SLEEVE ADAPTOR (A/C ROUGH BARREL TO CLAY)

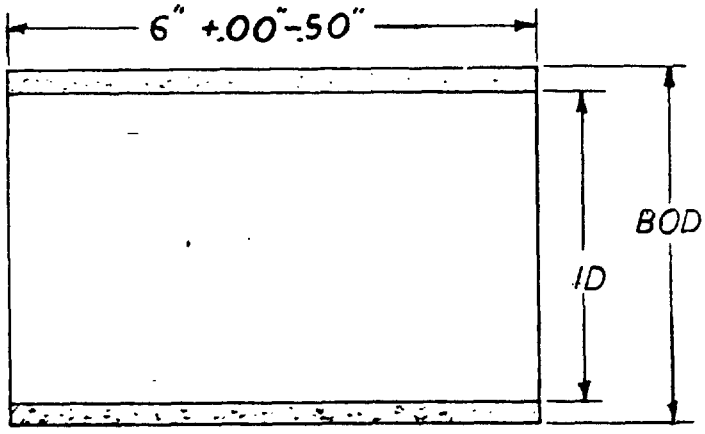

Marking Example:

CERTAINTEED
SLEEVE ADPT.
A.C. R.B. - CLAY
6" SEWER 15/24/3300

Dimensions

Pipe Size, Inches	I.D." ±.100"	B.O.D." Min.
4	6.00	7.00
6	8.50	9.50

CTD015223

PREPARED BY:	APPROVED BY:	R & D	MFG.	SALES	I.E.	OTHERS
AGH	mRS					

ADAPTOR BELL AND SPIGOT

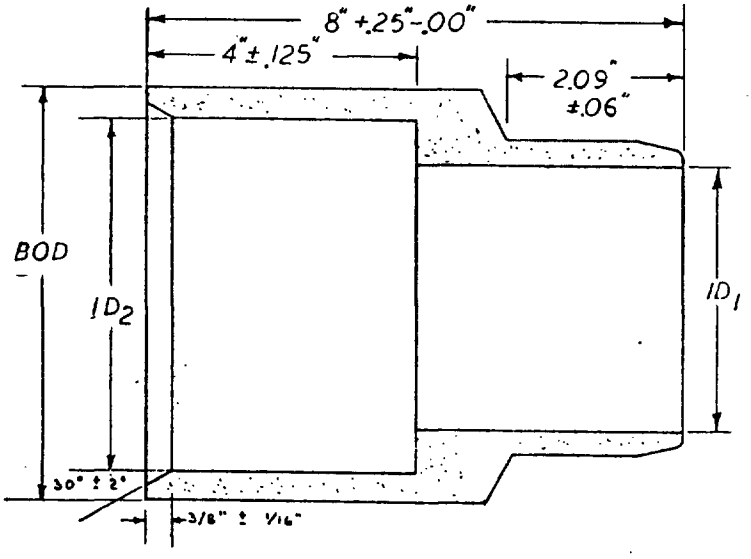

Dimensions

Pipe Size, Inches	Nom. I.D.$_1$"	I.D.$_2$" ±.030"	B.O.D." Min.
4	4.00	5.45	6.42
5	5.00	6.50	7.50
6	6.00	7.50	8.67

Note: 1. Refer to standard pipe ends for O.D.$_1$ and bevel machining.

Marking Example:

CERTAINTEED
5"SEWER ADPT. BELL
AND SPIGOT

TECHNICAL SPECIFICATIONS

CertainTeed

CertainTeed Corporation
Pipe and Plastics Group

SPECIFICATIONS CLASSIFICATION: A/C Standard Purchasing Specification		
T.C.O. REF. NO. 1	SPECIFICATION NO: 564	PAGE NO.: 13
SUPERSEDES:		DATE OF ISSUE: MAR 8 1979

DESCRIPTION:

Outside Purchased A/C Sewer Fittings

INCREASER ADAPTOR
CAST IRON TO SEWER

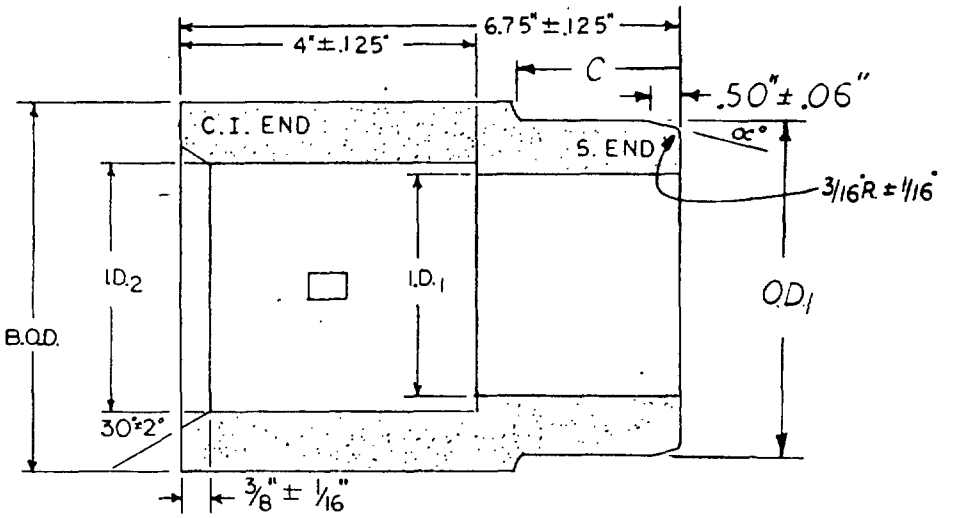

Dimensions

Pipe Size, Inches C.I. to A/C	Nom. I.D.1"	I.D.2" ±.030"	O.D.1" ±.02"	C" ±.06"	α° ±2°	B.O.D." Min.
2 x 4	2.95	3.20	4.62	2.09	14	4.81
3 x 4	3.80	4.10	4.62	2.09	14	5.04
4 x 5	4.70	5.10	5.66	2.09	14	6.08
4 x 6	4.70	5.10	6.66	2.09	14	6.91

Marking Example:

CERTAINTEED
4 x 6 INCR. ADPT.
CI TO A/C SEWER

CTD015225

PREPARED BY:	APPROVED BY:	R & D	MFG.	SALES	I.E.	OTHERS

DUPLEX ADAPTOR COUPLING
CLAY SPIGOT TO A/C M.E.

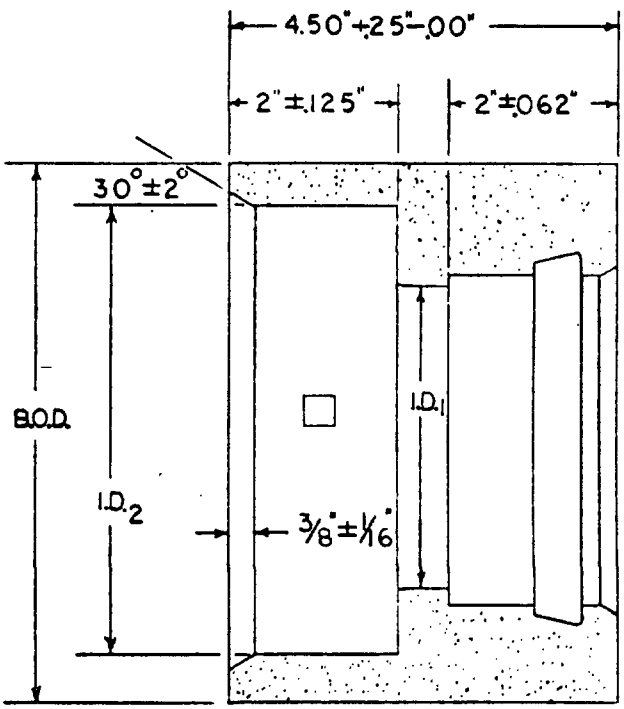

Dimensions

Pipe Size Inches	Nom. I.D.1"	I.D.2" ±.10"	B.O.D." Min.
4	4.00	6.25	7.19
5	5.00	7.25	8.23
6	6.00	8.50	9.54

Marking Example:

CERTAINTEED
DUPL. ADPT. CPLG.
CLAY SPIGOT - A.C.M.E.
4" SEWER 15/24/3300

Note: 1. Refer to standard coupling for machined dimensions not shown.

TECHNICAL SPECIFICATIONS

CertainTeed

CertainTeed Corporation
Pipe and Plastics Group

SPECIFICATIONS CLASSIFICATION: A/C Standard Purchasing Specification

T.C.O. REF. NO.	SPECIFICATION NO:	PAGE NO.:
1	564	15

SUPERSEDES:

DATE OF ISSUE: MAR 8 1979

DESCRIPTION:

Outside Purchased A/C Sewer Fittings

DUPLEX ADAPTOR COUPLING CONCRETE TO F.T. SEWER

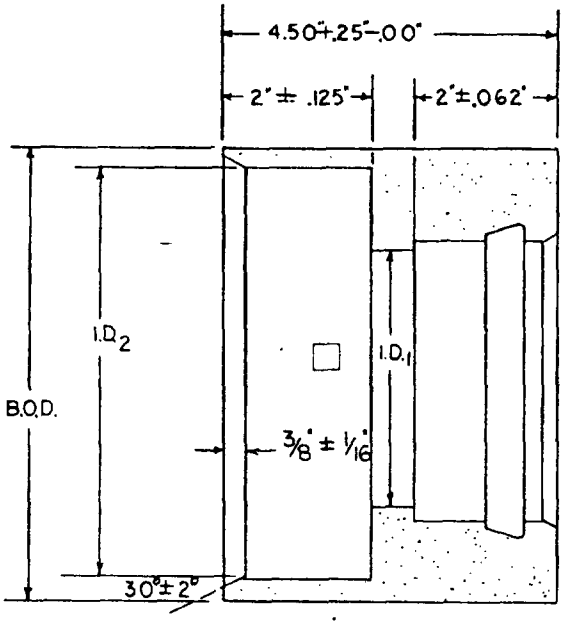

Marking Example:

CERTAINTEED
DUPL. ADPT. CPLG.
CONCRETE - FT. SEWER
6" SEWER 15/24/3300

Dimensions

Pipe Size, Inches	Nom. I.D.$_1$"	I.D.$_2$" ±.10"	B.O.D." Min.
4	4.35	6.35	7.29
6	6.35	8.98	10.02

Note: 1. Refer to standard coupling for machined dimensions not shown.

CTD015227

PREPARED BY:	APPROVED BY:	R & D	MFG.	SALES	I.E.	OTHERS
LBN	MRS					

DUPLEX ADAPTOR COUPLING
CAST IRON TO SEWER

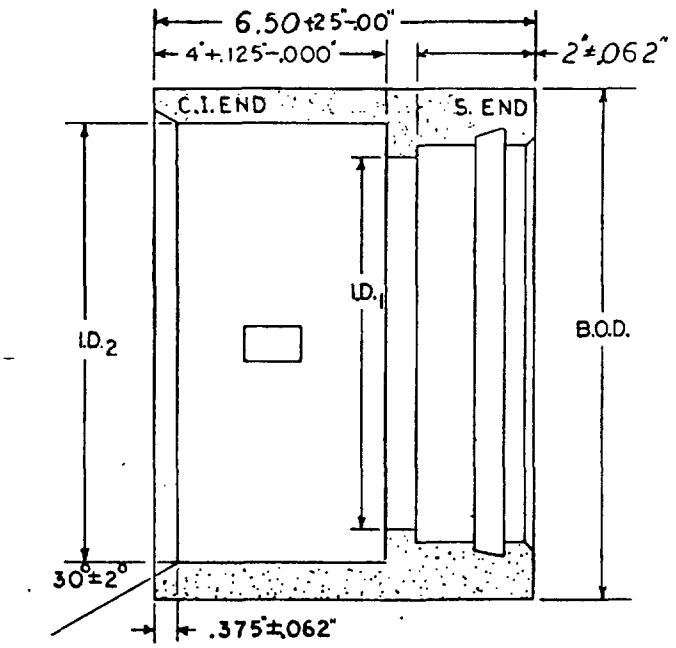

Dimensions

Pipe Size, Inches	Nom. I.D.$_1$"	I.D.$_2$" ±.030"	B.O.D." Min.
4	4.35	5.45	6.42
5	5.35	6.50	7.50
6	6.35	7.50	8.67

Note: Refer to standard coupling for machined dimensions not shown.

Marking Example:

CERTAINTEED
4"DUPLEX ADPT. CPLG.
CI TO A/C SEWER

TECHNICAL SPECIFICATIONS

CertainTeed

CertainTeed Corporation
Pipe and Plastics Group

SPECIFICATIONS CLASSIFICATION: A/C Standard Purchasing Specification		
T.C.O. REF. NO.: 1	SPECIFICATION NO: 564	PAGE NO.: 17
SUPERSEDES:		DATE OF ISSUE: MAR 8 1979

DESCRIPTION:

Outside Purchased A/C Sewer Fittings

COUPLING END PLUG

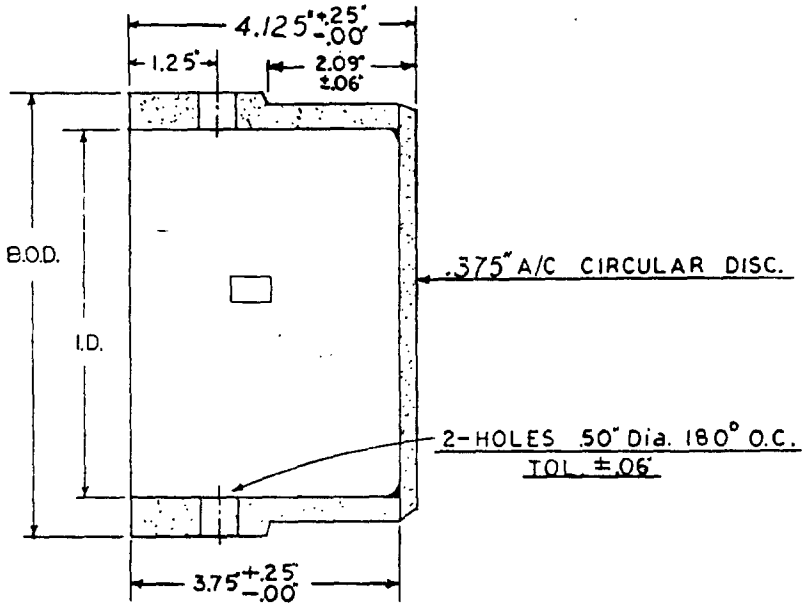

Marking Example:

CERTAINTEED
CPLG. END PLUG
4" SEWER 15/24/3300

Pipe Size, Inches	Nom. I.D."	B.O.D." Min.	A/C Circular Disc.
4	4.00	4.87	.375" x 4.70" O.D.
5	5.00	5.98	.375" x 5.75" O.D.
6	6.00	7.04	.375" x 6.75" O.D.

Note:
1. Refer to standard pipe for O.D.1 and bevel.
2. A/C circular disc shall be supplied by the A/C plant.
3. Epoxy A/C disc in place.

CTD015229

PREPARED BY:	APPROVED BY:	R & D	MFG.	SALES	I.E.	OTHERS
LBH	MRB					

Sewer Tee Nipple For Field Cut Mains

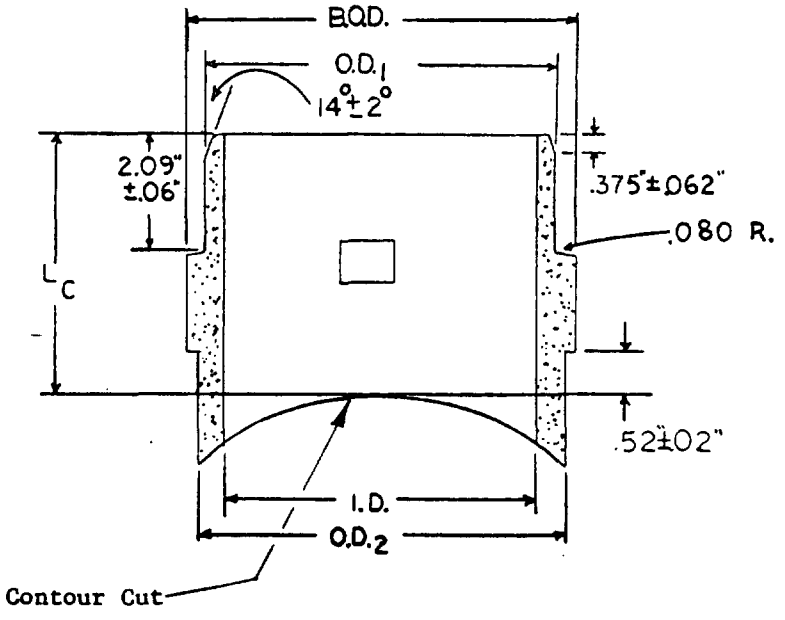

Dimensions

Nipple Size, Inches	Nom. I.D."	B.O.D." Min.	O.D.1" ±.02"	O.D.2" ±.02"	LC" ±.06"
4	4.00	5.50	4.62	5.12	5.00
5	5.00	6.50	5.66	6.12	5.00
6	6.00	7.50	6.66	7.12	5.00

Nipple Size, Inches	Contour Cut Diameter 4", 5" & 6" Branch Size (All Classes)
6	6.00
8	8.00
10	10.00
12	12.00
14	14.00
15	15.00
16	16.00
18	18.00
20	20.00
21	21.00
24	24.00

Marking Example:

CERTAINTEED
SEWER TEE NIPPLE
4" SEWER x 12"

CTD015230

TECHNICAL SPECIFICATIONS

CertainTeed

CertainTeed Corporation
Pipe and Plastics Group

SPECIFICATIONS CLASSIFICATION: A/C Standard Purchasing Specification		
T.C.O. REF. NO.	SPECIFICATION NO:	PAGE NO.:
1	564	19
SUPERSEDES:		DATE OF ISSUE: MAR 8 1979

DESCRIPTION:

Outside Purchased A/C Sewer Fittings

INCREASER ADAPTOR
A/C FLUID-TITE SEWER TO A/C FLUID-TITE SEWER

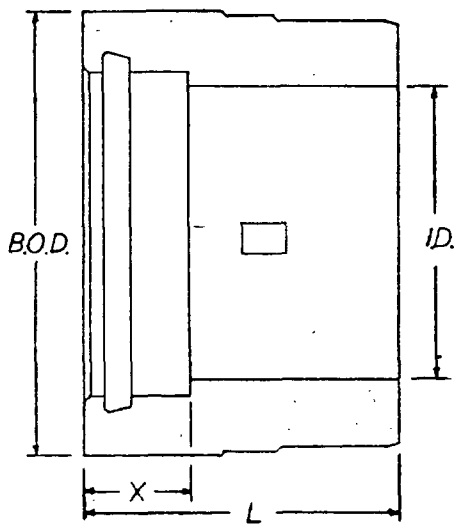

Marking Example:

CERTAINTEED
INCREASER
8" TO 10" SEWER
EXTRA HEAVY

Notes:

1. Refer to Standard Pipe and Coupling pages for dimensions not shown.
2. Machining not required on B.O.D. or I.D.

CTD015231

Dimensions

Pipe Size, Inches A/C to A/C	Nom. I.D."	X" ±.13"	L" +.25" -.00"	B.O.D." +.25" -.00" Heavy	Extra Heavy	6000/7000
4 to 5	4.60	2.25	6.25	6.20	—	—
4 to 6	4.60	2.25	6.25	7.22	—	—
5 to 6	5.60	2.25	6.25	7.22	—	—
6 to 8	6.00	2.38	6.25	—	9.24	—
8 to 10	8.00	2.88	6.75	—	11.58	—
10 to 12	10.00	3.25	7.25	—	13.70	—
12 to 14	12.00	3.25	7.50	—	15.84	—
12 to 15	12.00	4.00	8.50	—	16.94	—
14 to 15	14.00	4.55	8.75	—	17.48	—
14 to 16	14.00	3.50	7.75	—	17.98	—
15 to 16	15.00	4.55	8.75	—	18.61	—
15 to 18	15.00	4.55	9.50	—	20.20	20.63
16 to 18	16.00	3.50	8.50	—	20.20	20.63
18 to 20	18.00	4.13	9.25	—	22.32	22.77
18 to 21	18.00	5.05	10.25	—	23.40	23.85
20 to 21	20.00	5.05	10.25	—	24.15	24.67
21 to 24	21.00	5.05	10.50	—	26.60	—

PREPARED BY:	APPROVED BY:	R & D	MFG.	SALES	I.E.	OTHERS

END CAP

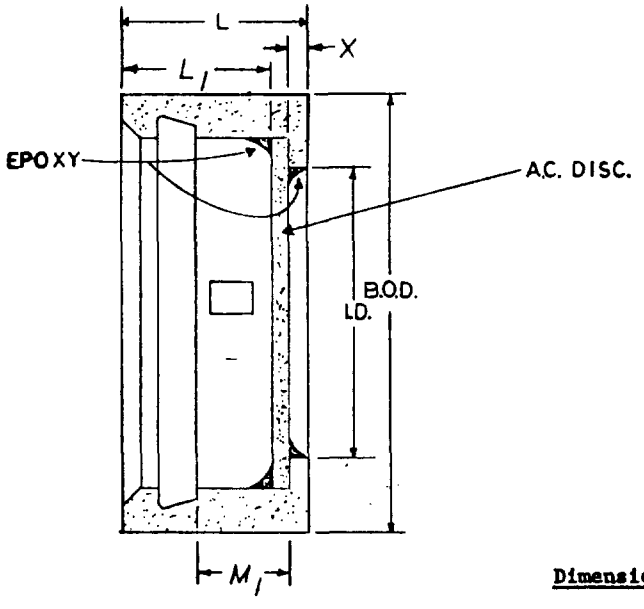

Marking Example:

CERTAINTEED
END CAP
10" 15/24/3300 S
HVY.

Dimensions

Pipe Size Inches	I.D." Nom.	L" ±.13"	L_1" ±.13"	X" Min.	M_1" +.00" -.06"	B.O.D. +.25" -.00" Class 2400	Heavy	Extra Heavy	Class 6000/ 7000	A/C Circular Disc. Thick	Diam.
4	4.00	3.13	2.38	.38	1.63	5.92	6.00	---	---	.375	4.60
5	5.00	3.13	2.38	.38	1.63	7.06	7.14	---	---	.375	5.65
6	6.00	3.13	2.38	.38	1.63	8.12	8.20	---	---	.375	6.65
8	8.00	4.00	3.00	.50	1.88	10.50	10.59	---	---	.500	8.79
10	10.00	4.38	3.38	.50	2.26	12.75	12.75	13.00	---	.500	10.90
12	12.00	4.63	3.38	.63	2.38	15.00	15.00	15.24	---	.625	13.00
14	14.00	4.88	3.63	.63	2.63	17.15	17.15	17.48	---	.625	15.09
15	15.00	5.83	4.58	.63	3.08	18.26	18.26	18.61	---	.625	16.15
16	16.00	4.88	3.63	.63	2.63	19.31	19.31	19.68	---	.625	17.17
18	18.00	5.75	4.25	.75	3.00	21.63	21.63	22.09	22.47	.750	19.26
20	20.00	5.75	4.25	.75	3.00	23.81	23.81	24.15	24.67	.750	21.32
21	21.00	6.58	5.08	.75	3.71	24.96	24.96	25.26	25.81	.750	22.40
24	24.00	5.75	4.25	.75	3.00	28.22	28.22	28.69	29.15	.750	25.54

Note:

1. Refer to standard coupling for machined dimensions not shown.
2. A/C circular disc shall be supplied by the A/C plant.
3. Epoxy A/C disc in place.

CTD015232

TECHNICAL SPECIFICATIONS

CertainTeed

CertainTeed Corporation
Pipe and Plastics Group

SPECIFICATIONS CLASSIFICATION: A/C Standard Purchasing Specification

T.C.O. REF. NO.	SPECIFICATION NO:	PAGE NO.:
1	564	21

SUPERSEDES:

DATE OF ISSUE: MAR 8 1979

DESCRIPTION:

Outside Purchased A/C Sewer Fittings

DROP MANHOLE SECTION

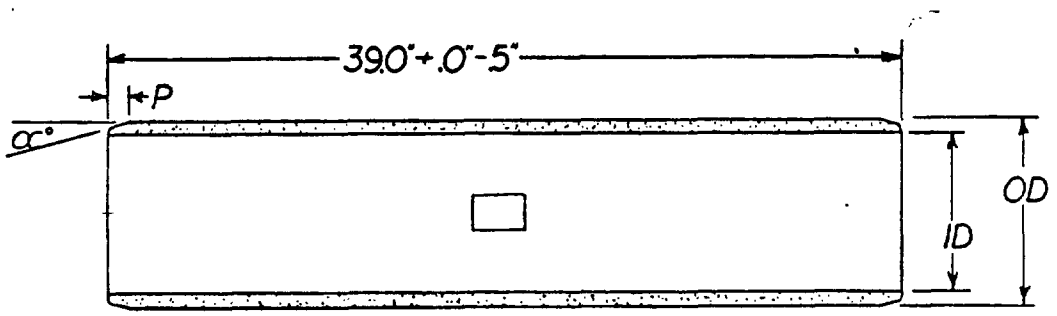

Marking Example:

CERTAIN-TEED
DROP MANHOLE SECTION
8" SEWER
FOR VERTICAL USE ONLY

Dimensions

Pipe Size, Inches	Nom. I.D.	O.D." ± .02"
6	5.80	6.66
8	7.80	8.80
10	9.55	10.89
12	11.45	12.99
14	13.60	15.07
15	14.45	16.11
16	15.50	17.15

CTD015233

Note: 1. This item for use in vertical position only.

2. Refer to standard pipe for bevel dimensions.

PREPARED BY:	APPROVED BY:	R & D	MFG.	SALES	I.E.	OTHERS
[signature]	MRS		[signature]	[signature]		[signature]

02-10-0023 (P927) 12/76 CONFIDENTIAL DOCUMENT - NOT TO BE DISTRIBUTED TO UNAUTHORIZED PERSONNEL

MANHOLE STUB

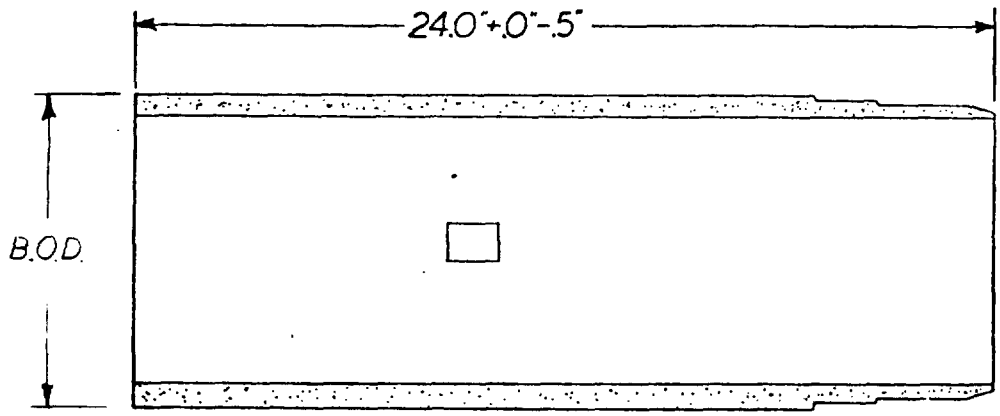

Marking Example:

CERTAIN-TEED
MANHOLE STUB
16" CLASS 2400 SEWER

Dimensions

Pipe Size, Inches	B.O.D." +.25" -.00"						
	Class 1500	Class 2400	Class 3300	Class 4000	Class 5000	Class 6000	Class 7000
6	6.91	7.04	7.22				
8	9.00	9.06	9.24				
10	11.14	11.14	11.30	11.45	11.58		
12	13.24	13.24	13.46	13.54	13.70		
14	15.32	15.32	15.50	15.64	15.84		
15	16.36	16.36	16.56	16.72	16.94		
16	17.42	17.42	17.60	17.74	17.98		
18		19.60	19.80	20.00	20.20	20.43	20.63
20		21.66	21.88	22.10	22.32	22.55	22.77
21		22.74	22.94	23.18	23.40	23.63	23.85
24		25.88	26.12	26.36	26.60	26.79	27.03

Note: 1. Refer to standard pipe for machined dimensions not shown.

TECHNICAL SPECIFICATIONS

CertainTeed

CertainTeed Corporation
Pipe and Plastics Group

SPECIFICATIONS CLASSIFICATION: A/C Standard Purchasing Specification		
T.C.O. REF. NO.	SPECIFICATION NO:	PAGE NO.:
1	564	23
SUPERSEDES:		DATE OF ISSUE: MAR 8 1979

DESCRIPTION:

Outside Purchased A/C Sewer Fittings

This page left intentionally blank

CTD015235

PREPARED BY:	APPROVED BY:	R & D	MFG.	SALES	I.E.	OTHERS

ELBOWS

11½°, 22½°, 30°, 45°, and 90° ELBOWS

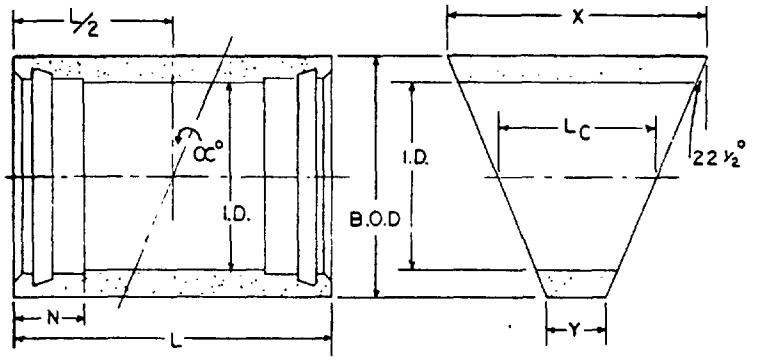

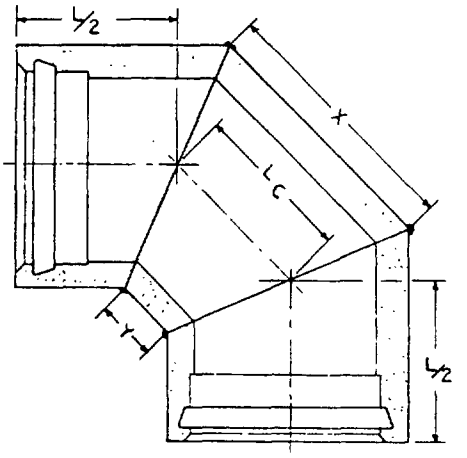

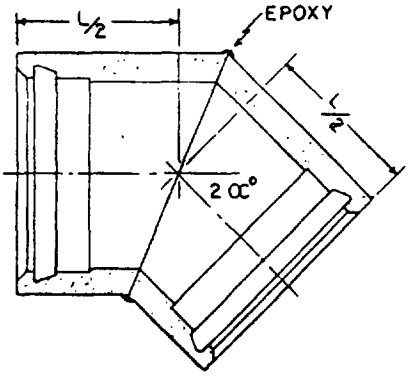

Note:
1. Refer to standard coupling for machining not shown.
2. For fabrication of 90° elbows, add fillet to 45° elbow. (Tolerance on 90° elbows ±5°)
3. Epoxy all adjoining surfaces. Remove excess on inside for smooth surface.

All Pipe Sizes - 1500, 2400, and 3300

N=2.00" ±.062"

	α°±2°	2α°±5°
11½° Elbows	5 5/8°	11 1/4°
22½° Elbows	11 1/4°	22 1/2°
30° Elbows	15°	30°
45° Elbows	22 1/2°	45°
90° Elbows	22 1/2°	45°

Marking Example:

CERTAIN-TEED
30° EL
6" Sewer 15/24/3300

Pipe Size, Inches	Nom. I.D."	B.O.D." +.25" -.00"	L" +.25" -.00"	L/2"	Lc"	Y" +.125" -.000"	X" +.125" -.000"
4	4.60	5.92	10.75	5.375	5.375	2.915	7.835
5	5.60	7.06	10.75	5.375	5.375	2.455	8.295
6	6.60	8.12	10.75	5.375	5.375	2.015	8.735

CTD015236

TECHNICAL SPECIFICATIONS

CertainTeed

CertainTeed Corporation
Pipe and Plastics Group

SPECIFICATIONS CLASSIFICATION:
A/C Standard Purchasing Specification

T.C.O. REF. NO.	SPECIFICATION NO:	PAGE NO.:
1	564	25

SUPERSEDES:

DATE OF ISSUE: MAR 8 1979

DESCRIPTION:

Outside Purchased A/C Sewer Fittings

45° WYE FITTING

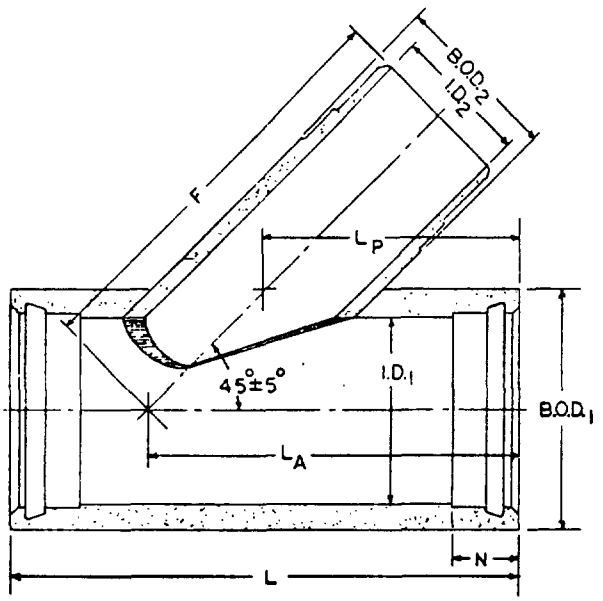

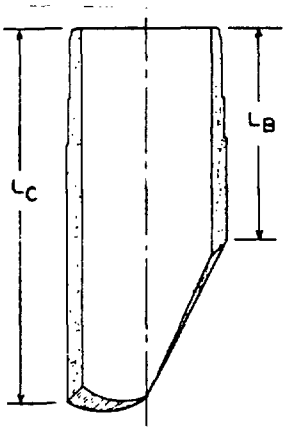

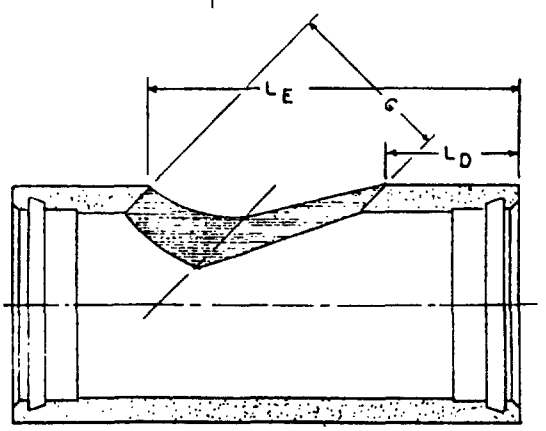

Marking Example:

CERTAIN-TEED
45° WYE
4"S.x4"S. 15/24/3300

Dimensions

Reducing N" ≈2.00" ± .062"

Pipe Size, Inches	Nom. I.D.1"	Nom. I.D.2"	B.O.D.1" +.25" -.00"	B.O.D.2" Min.	G" +.030" -.020"	L_P"	F"	L.A."	L" +.00" -.50"	L.C." ±.06"	L.B." ±.06"	L.D." ±.06"	L.E." ±.06"
5x4	5.60	4.00	7.06	4.87	4.89	7.63	12.25	11.16	15.25	11.25	6.38	4.18	11.08
6x4	6.60	4.00	8.12	4.87	4.89	8.50	13.00	12.56	17.00	11.30	6.43	5.05	11.95
6x5	6.60	5.00	8.12	5.98	6.00	8.50	13.75	12.56	17.00	12.40	5.42	4.27	12.73

Non-Reducing

Pipe Size, Inches	Nom. I.D1"	Nom. I.D2"	B.O.D.1" +.25" -.00"	B.O.D.2" Min.	F"	L_P"	L.A."	L" +.00" -.50"	L.C." ±.06"	L.B." ±.06"	L.D." ±.06"	L. E." ±.06"
4x4	4.60	4.00	5.92	4.87	11.50	6.88	9.84	13.75	9.80	4.93	3.43	10.33
5x5	5.60	5.00	7.06	5.98	12.75	7.63	11.16	15.25	10.70	4.72	3.40	11.86
6x6	6.60	6.00	8.12	7.04	14.25	8.50	12.56	17.00	11.88	4.84	3.51	13.49

Note: 1. Refer to standard coupling machining for main machining.
2. Refer to standard pipe for machining dimensions not shown.

CTD015237

PREPARED BY:	APPROVED BY:	R & D	MFG.	SALES	I.E.	OTHERS

45° DOUBLE WYE FITTING

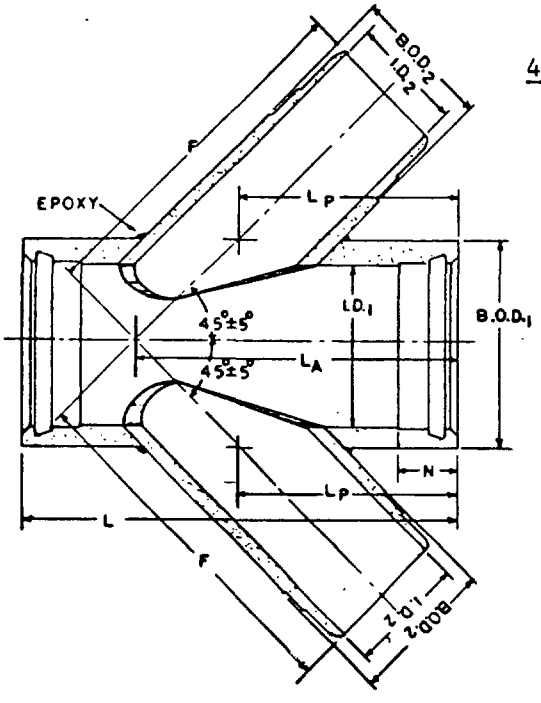

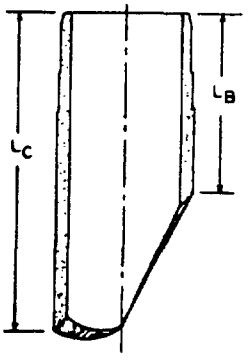

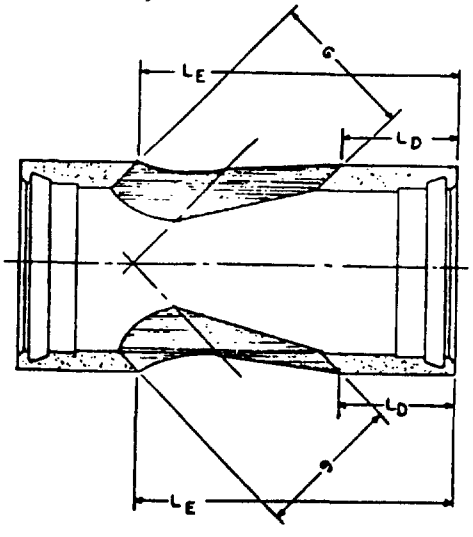

Marking Example:

CERTAIN-TEED 45° DBLE. WYE 6"S.x6"S. 15/24/3300

Dimensions

Reducing N" = 2.00" ± .062"

Pipe Size, Inches	Nom. $I.D._1$"	Nom. $I.D._2$"	$B.O.D._1$" +.25" -.00"	$B.O.D._2$" Min.	G" +.030" -.020"	L_P"	F"	L.A."	L" +.00" -.50"	L.C." ±.06"	L.B." ±.06"	L. D." ±.06"	L.E." ±.06"
5x4	5.60	4.00	7.06	4.87	4.89	7.63	12.25	11.16	15.25	11.25	6.38	4.18	11.08
6x4	6.60	4.00	8.12	4.87	4.89	8.50	13.00	12.56	17.00	11.30	6.43	5.05	11.95
6x5	6.60	5.00	8.12	5.98	6.00	8.50	13.75	12.56	17.00	12.40	5.42	4.27	12.73

Non-Reducing

Pipe Size, Inches	Nom. $I.D._1$"	Nom. $I.D._2$"	$B.O.D._1$" +.25" -.00"	$B.O.D._2$" Min.	F"	L_P"	L.A."	L" +.00" -.50"	L.C." ±.06"	L.B." ±.06"	L.D." ±.06"	L.E." ±.06"
4x4	4.60	4.00	5.92	4.87	11.50	6.88	9.84	13.75	9.80	4.93	3.43	10.33
5x5	5.60	5.00	7.06	5.98	12.75	7.63	11.16	15.25	10.70	4.72	3.40	11.86
6x6	6.60	6.00	8.12	7.04	14.25	8.50	12.56	17.00	11.88	4.84	3.51	13.49

Note: 1. Refer to standard coupling machining for main machining.
2. Refer to standard pipe for machining dimensions not shown.
3. Same branch both sides of main.
4. Branches to be 180° apart.

CTD015238

TECHNICAL SPECIFICATIONS

CertainTeed

CertainTeed Corporation
Pipe and Plastics Group

SPECIFICATIONS CLASSIFICATION: A/C Standard Purchasing Specification		
T.C.O. REF. NO. 1	SPECIFICATION NO: 564	PAGE NO.: 27
SUPERSEDES:		DATE OF ISSUE: MAR 8 1979

DESCRIPTION:

Outside Purchased A/C Sewer Fittings

60° WYE FITTING

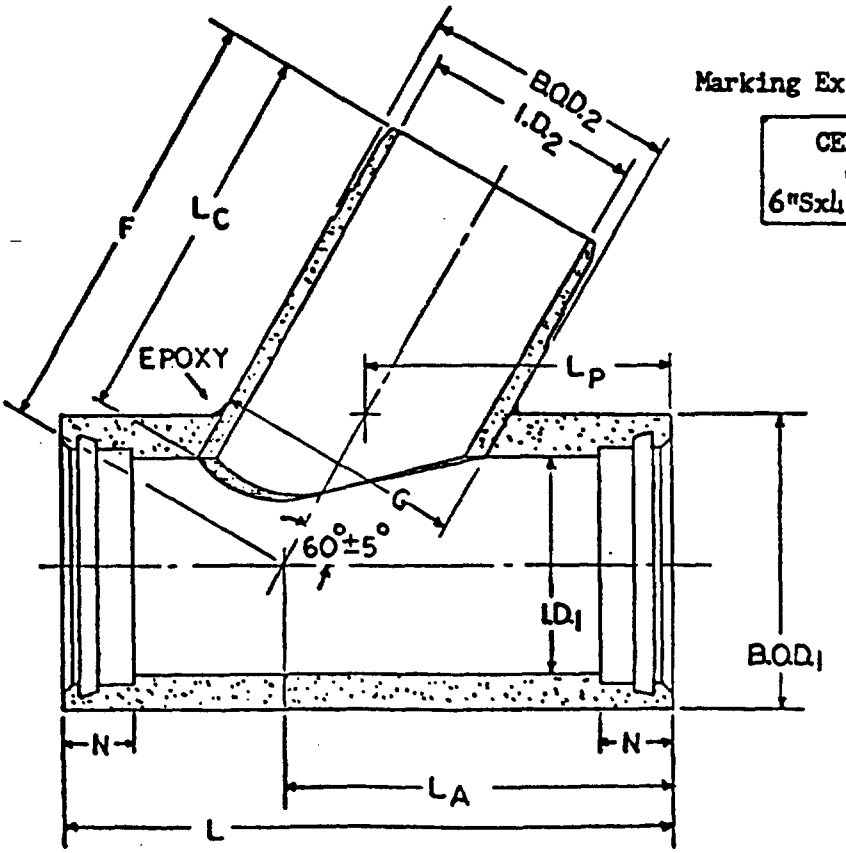

Marking Example:

CERTAIN-TEED
60° WYE
6"Sx4"S 15/24/3300

N=2.00" ±.062"

CTD015239

Pipe Size Inches	Nom. $I.D._1$"	Nom. $I.D._2$"	$B.O.D._1$" +.25" -.00"	$B.O.D._2$" Min.	G" +.03" -.02"	L" +.00" -.50"	L_A"	F"	L_C" ±.06"	L_P"
6x4	6.60	4.00	8.12	4.87	4.89	17.00	10.94	10.75	9.37	8.60
6x5	6.60	5.00	8.12	5.98	6.00	17.00	11.42	12.00	10.14	9.08
6x6	6.60	6.00	8.12	7.04	7.06	17.00	11.88	12.75	10.77	9.54

Note: Refer to Standard Pipe and Coupling for machining dimensions not shown.

PREPARED BY:	APPROVED BY:	R & D	MFG.	SALES	I.E.	OTHERS
JBN	MRS					

TEE FITTING

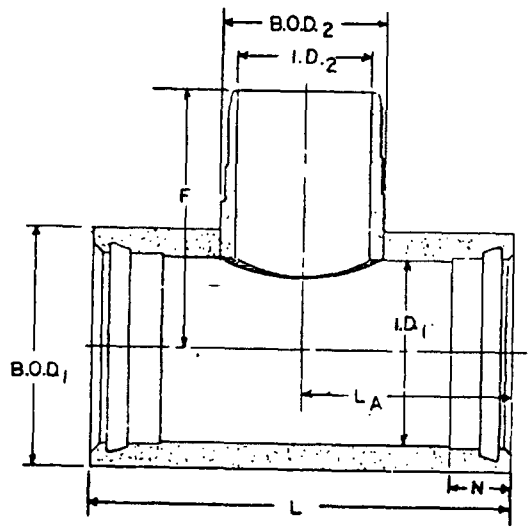

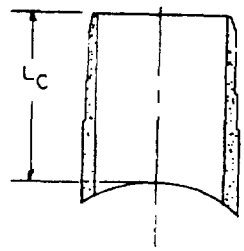

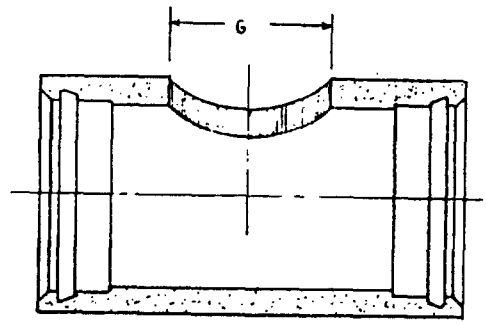

Marking Example:

CERTAIN-TEED TEE 4"S.x4"S. 15/24/3300

Reducing N" = 2.00" ± .062"

Pipe Size, Inches	Nom. I.D.1"	Nom. I.D.2"	B.O.D.1" +.25" -.00"	B.O.D.2" Min.	L" +.00" -.50"	G" +.030" -.020"	F"	L.C." +.06"	LA"
5x4	5.60	4.00	7.06	4.87	12.75	4.89	8.77	5.97	6.375
6x4	6.60	4.00	8.12	4.87	13.75	4.89	9.30	6.00	6.875
6x5	6.60	5.00	8.12	5.98	13.75	6.00	9.30	6.00	6.875

Non-Reducing

Pipe Size, Inches	Nom. I.D.1"	Nom. I.D.2"	B.O.D.1" +.25" -.00"	B.O.D.2" Min.	L" +.00" -.50"	F"	G" +.030" -.020"	L.C." ±.06"	LA"
4x4	4.60	4.00	5.92	4.87	11.50	8.20	4.89	5.90	5.75
5x5	5.60	5.00	7.06	5.98	12.75	8.77	6.00	5.97	6.375
6x6	6.60	6.00	8.12	7.04	13.75	9.30	7.06	6.00	6.875

Note: 1. Refer to standard pipe for machining dimensions not shown.
2. Refer to standard coupling for machining dimensions not shown.

TECHNICAL SPECIFICATIONS

CertainTeed

CertainTeed Corporation
Pipe and Plastics Group

SPECIFICATIONS CLASSIFICATION: A/C Standard Purchasing Specification		
T.C.O. REF. NO. 2	SPECIFICATION NO: 564	PAGE NO.: 29
SUPERSEDES: March 8, 1979	DATE OF ISSUE: JUL 17 1979	

DESCRIPTION:

Outside Purchased A/C Sewer Fittings

11¼°, 22½°, 30°, 45°, and 90° Elbows

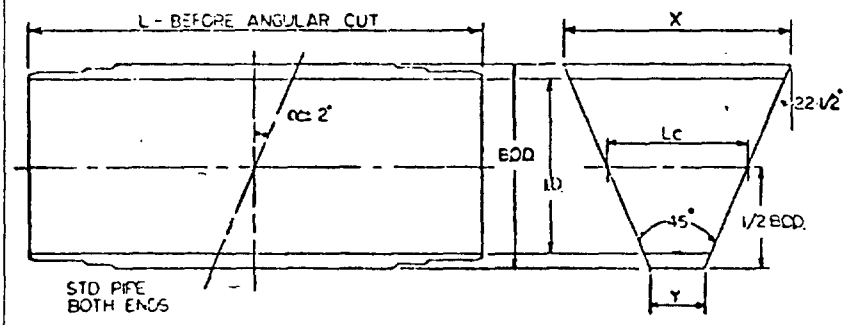

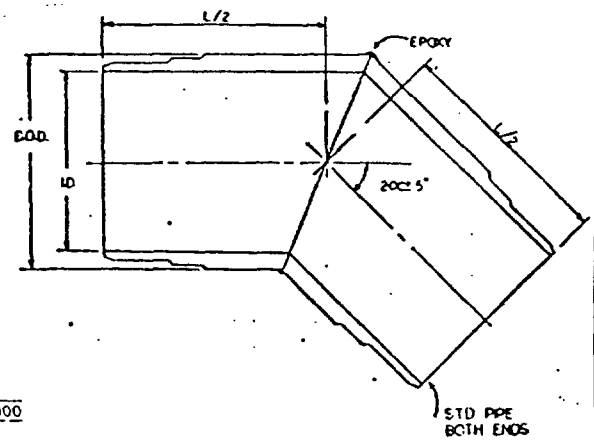

Dimensions

All Pipe Sizes - All Classes

		cc° ±2°	2 cc° ± 5° Nom.
11¼°	Elbows	5-5/8°	11¼°
22½°	Elbows	11¼°	22½°
30°	Elbows	15°	30°
45°	Elbows	22½°	45°
90°	Elbows	22½°	45°

90° Elbows With Fillet

Pipe Size, Inches	L_c" Nom.	Y" +.75"-.00" All Classes	X" +.25" -.00" 2400, Heavy	Extra Heavy	6000/7000
8	9.50	5.75	13.25	---	---
10	9.50	4.75	14.00	14.25	---
12	9.50	3.75	14.75	15.00	---
14	9.50	3.50	16.25	16.50	---
15	9.25	2.25	16.00	16.25	---
16	9.25	2.00	16.50	16.75	---
18	18.50	10.00	26.25	26.75	27.00
20	18.25	9.00	27.00	27.50	27.75
21	18.25	8.50	27.25	27.75	28.25
24	18.00	7.00	28.50	29.00	29.25

Pipe Size, Inches	I.D. Nom. All Classes	L" +.00" -.50"	B.O.D." Min. 2400	Heavy	Extra Heavy	6000/7000
8	8.00	19.50	9.06	9.24	---	---
10	10.00	19.50	11.14	11.30	11.58	---
12	12.00	19.50	13.24	13.46	13.70	---
14	14.00	19.50	15.32	15.50	15.84	---
15	15.00	19.50	16.36	16.56	16.94	---
16	16.00	19.50	17.42	17.60	17.98	---
18	18.00	39.00	19.60	19.80	20.20	20.63
20	20.00	39.00	21.66	21.88	22.32	22.77
21	21.00	39.00	22.74	22.94	23.40	23.85
24	24.00	39.00	25.88	26.12	26.60	27.03

Marking Example:

CERTAINTEED
12" 30° EL
HVY. SEWER

Note:
1. Refer to standard pipe ends for machining dimensions not shown.
2. Epoxy all adjoining surfaces. Remove excess on inside for smooth surface.
3. For fabrication of 90° elbows, add fillet to center of 45° elbow.
4. Epoxy fillet on all outside adjoining pieces.
5. Tolerance on 90° elbows ±5°.
6. Certa-spacer required on one end.

PREPARED BY:	APPROVED BY:	R & D	MFG.	SALES	I.E.	OTHERS
FJS	mks			J.R.A.		CMB

45° Wye Fitting

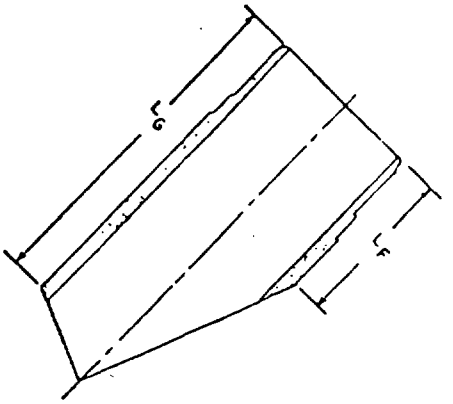

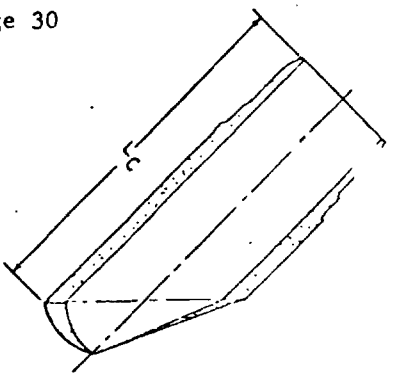

Non-Reducing

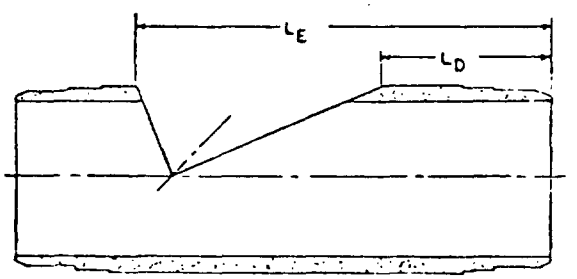

Reducing

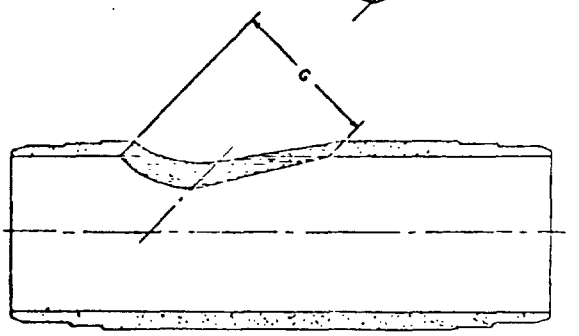

Marking Example:

CERTAINTEED
8x8x8 45° WYE
HVY. SEWER

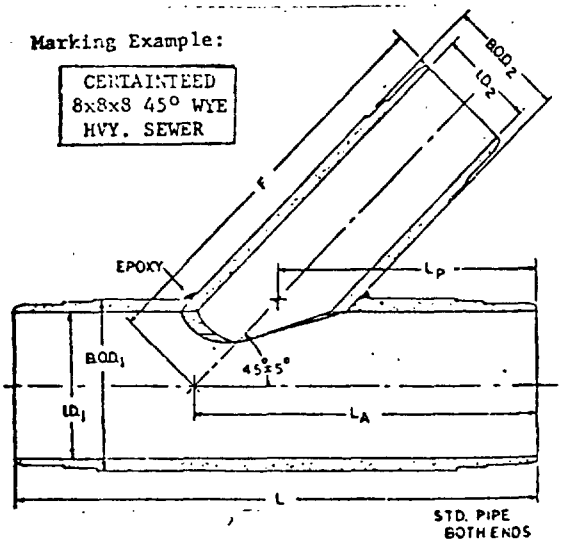

Main Pipe Size, Inches	Nom. I.D.,1" All Classes	B.O.D.,1" Min. 2400	Heavy	Extra Heavy	6000/7000
8 x 8	8.00	9.06	9.24	---	---
10 x 10	10.00	11.14	11.30	11.58	---
12 x 12	12.00	13.24	13.46	13.70	---
14 x 14	14.00	15.32	15.50	15.84	---
15 x 15	15.00	16.36	16.56	16.94	---
16 x 16	16.00	17.42	17.60	17.98	---
18 x 18	18.00	19.60	19.80	20.20	20.63
20 x 20	20.00	21.66	21.88	22.32	22.77
21 x 21	21.00	22.74	22.94	23.40	23.85
24 x 24	24.00	25.88	26.12	26.60	27.03

Branch Pipe Size, Inches	Nom. I.D.,2" All Classes	B.O.D.,2" Min. 2400	Heavy	Extra Heavy	6000/7000
4	4.00	4.87	4.87	---	---
5	5.00	5.98	5.98	---	---
6	6.00	7.04	7.04	---	---
8	8.00	9.06	9.24	---	---
10	10.00	11.14	11.30	11.58	---
12	12.00	13.24	13.46	13.70	---
14	14.00	15.32	15.50	15.84	---
15	15.00	16.36	16.56	16.94	---
16	16.00	17.42	17.60	17.98	---
18	18.00	19.60	19.80	20.20	20.63
20	20.00	21.66	21.88	22.32	22.77
21	21.00	22.74	22.94	23.40	23.85
24	24.00	25.88	26.12	26.60	27.03

L" +0.00" -3.00" — 2400, Heavy, Extra Heavy and 6000/7000

Main Pipe Size, Inches	Branch Size, Inches 4	5	6	8	10	12	14	15	16	18	20	21	24
8 x 8	39	39	39	39									
10 x 10	39	39	39	39	39								
12 x 12	39	39	39	39	39	39							
14 x 14	39	39	39	39	39	39	39						
15 x 15	39	39	39	39	39	39	39	39					
16 x 16	39	39	39	39	39	39	39	39	39				
18 x 18	39	39	39	39	39	39	52	52	52	52			
20 x 20	39	39	39	39	39	39	52	52	52	52	52		
21 x 21	39	39	39	39	39	39	52	52	52	52	52	52	
24 x 24	39	39	39	39	39	39	52	52	52	52	52	52	78

Branch Size, In.	C" +.04" -.01" 2400	Heavy	Ex. Heavy	6000/7000
4	4.89	4.89	---	---
5	6.00	6.00	---	---
6	7.06	7.06	---	---
8	9.08	9.08 *	---	---
10	11.16	11.32	11.60	---
12	13.26	13.48	13.72	---
14	15.34	15.52	15.86	---
15	16.38	16.58	16.96	---
16	17.44	17.62	18.00	---
18	19.62	19.82	20.22	20.22 *
20	21.68	21.90	22.34	22.34 *
21	22.76	23.05	23.68	23.68 *

Note:

1. For main and branch machining dimensions, refer to standard pipe ends.
2. Right end of main shown above is to be preballed (with certa-spacer) before shipment.

CTD015242

TECHNICAL SPECIFICATIONS

CertainTeed

CertainTeed Corporation
Pipe and Plastics Group

SPECIFICATIONS CLASSIFICATION: A/C Standard Purchasing Specification

T.C.O. REF. NO.	SPECIFICATION NO:	PAGE NO.:
2	564	31

SUPERSEDES: March 8, 1979

DATE OF ISSUE: JUL 17 1979

DESCRIPTION:

Outside Purchased A/C Sewer Fittings

L_E" +.00" -.25" All Classes

Main Size, Inches	Branch Size, Inches 4	5	6	8	10	12	14	15	16	18	20	21	24
8 x 8	11.9	11.9	11.9	13.4									
10 x 10	11.8	11.8	11.8	14.3	15.8								
12 x 12	12.2	12.2	12.2	15.7	15.7	17.2							
14 x 14	12.2	12.2	12.2	17.7	17.7	17.7	19.2						
15 x 15	13.4	14.2	14.9	16.7	18.2	19.8	21.3	22.1					
16 x 16	12.1	12.1	12.1	19.6	19.6	19.6	19.6	19.6	21.1				
18 x 18	13.2	13.2	13.2	21.9	21.9	21.9	21.9	21.9	21.9	23.9			
20 x 20	13.8	13.8	13.8	23.8	23.8	23.8	23.8	23.8	23.8	23.8	25.3		
21 x 21	14.0	14.8	15.6	17.3	18.8	20.4	22.0	22.7	23.5	25.1	26.6	27.5	
24 x 24	13.7	13.7	13.7	25.7	25.7	25.7	25.7	25.7	25.7	25.7	25.7	25.7	28.7

L_C" +.00" -1.00" All Classes

4	10.75
5	11.50
6	14.25
8	17.25
10	19.75
12	20.75
14	25.00
15	27.50
16	27.50
18	30.50
20	34.00
21	35.00

L_A" - All Classes

Main Size, Inches	Branch Size, Inches 4	5	6	8	10	12	14	15	16	18	20	21	24
8 x 8	16.5	16.5	16.5	19.0									
10 x 10	17.5	17.5	17.5	20.0	22.0								
12 x 12	19.0	19.0	19.0	22.5	22.5	23.5							
14 x 14	20.0	20.0	20.0	25.5	25.5	25.5	27.5						
15 x 15	21.7	22.5	23.2	25.0	26.5	28.1	29.6	30.4					
16 x 16	21.0	21.0	21.0	28.5	28.5	28.5	28.5	28.5	31.5				
18 x 18	24.0	24.0	24.0	32.0	32.0	32.0	32.0	32.0	32.0	34.5			
20 x 20	25.0	25.0	25.0	35.0	35.0	35.0	35.0	35.0	35.0	35.0	37.5		
21 x 21	25.5	26.3	27.1	28.8	30.3	31.9	33.5	34.3	35.0	36.6	38.2	39.0	
24 x 24	27.0	27.0	27.0	37.0	37.0	37.0	39.0	39.0	39.0	39.0	39.0	39.0	42.0

L_D" +.00" -.06"

	2400	Heavy	Ex. Heavy	6000/7000
8	8.06	7.93	---	---
10	8.55	8.36	8.02	---
12	7.52	7.25	6.96	---
14	9.01	8.79	8.38	---
15	10.53	10.39	10.12	---
16	10.47	10.25	9.80	---
18	10.84	10.60	10.12	9.31
20	11.35	11.09	10.56	9.20
21	11.42	11.28	10.95	10.64
24	10.76	10.47	9.89	9.59

F" - All Classes

Main Size, Inches	Branch Size, Inches 4	5	6	8	10	12	14	15	16	18	20	21	24
8 x 8	14.00	14.00	16.25	19.00									
10 x 10	15.25	15.50	17.75	19.50	21.75								
12 x 12	16.75	17.75	19.00	20.75	22.75	23.50							
14 x 14	18.25	18.25	20.50	23.25	24.00	25.75	27.25						
15 x 15	21.40	21.90	22.30	24.80	26.30	28.20	29.70	29.70					
16 x 16	19.50	19.75	22.00	23.75	25.25	25.00	28.50	29.50	31.25				
18 x 18	21.00	21.00	23.25	25.00	26.75	26.50	29.75	29.75	31.25	34.25			
20 x 20	22.25	22.50	24.75	26.50	28.25	27.75	31.25	31.25	32.75	35.25	37.25		
21 x 21	25.70	26.10	26.60	29.00	30.50	32.50	33.90	34.20	35.10	36.80	37.80	38.10	
24 x 24	25.25	25.50	27.50	29.50	31.00	30.75	34.00	34.00	35.50	37.50	39.75	39.00	41.75

L_F" + .00" -.06"

	2400	Heavy	Ex. Heavy	6000/7000
8	20.88	21.00	---	---
10	24.31	24.34	24.40	---
12	26.42	26.29	26.34	---
14	30.68	30.71	30.78	---
15	33.67	33.81	34.08	---
16	35.11	35.15	35.24	---
18	38.56	38.60	38.69	38.49
20	41.99	42.03	42.13	41.40
21	43.58	43.72	44.05	44.36
24	46.71	47.41	47.51	47.81

L_G" ± .25"

	2400	Heavy	Ex. Heavy	6000/7000
8	17.06	17.06	---	---
10	19.42	19.42	19.36	---
12	20.73	20.73	20.76	---
14	24.07	24.07	24.04	---
15	26.20	26.20	26.20	---
16	28.63	28.63	27.60	---
18	30.15	30.15	30.05	30.05
20	32.69	32.69	32.65	32.65
21	33.40	33.40	33.40	33.40
24	36.31	36.31	36.25	36.25

L_F" ± .25"

	2400	Heavy	Ex. Heavy	6000/7000
8	7.85	7.73	---	---
10	8.30	8.18	7.77	---
12	7.52	7.40	6.99	---
14	8.76	8.61	8.15	---
15	9.84	9.64	9.26	---
16	10.22	10.10	9.64	---
18	10.59	10.35	9.87	9.42
20	11.10	10.84	10.31	9.88
21	10.66	10.46	10.00	9.55
24	10.51	10.22	9.64	9.22

PREPARED BY:	APPROVED BY:	R & D	MFG.	SALES	I.E.	OTHERS
FJ	mpb		J.E.A.		OHS	

60° Wye Fitting

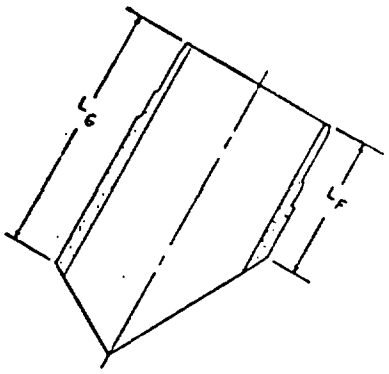

Non-Reducing

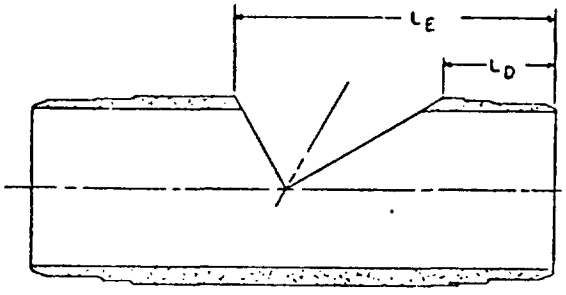

Reducing

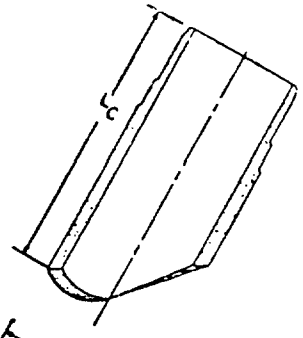

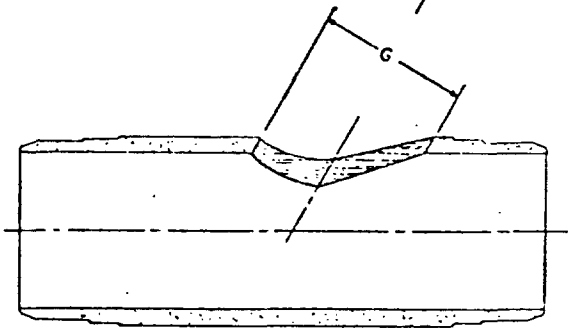

Marking Example:

CERTAINTEED
8x8x8 60° WYE
HVY. SEWER

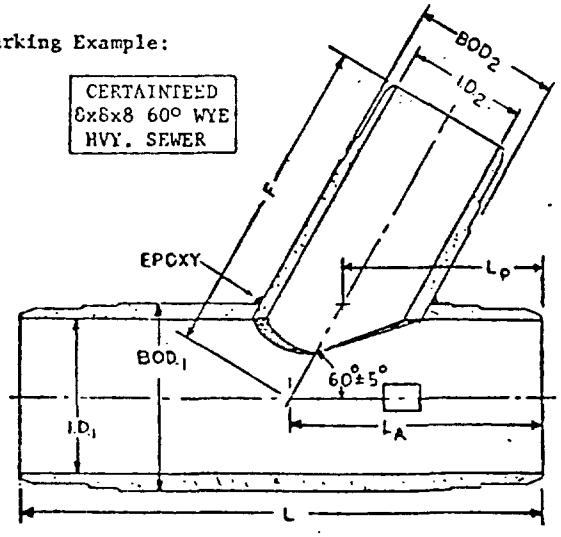

Main Pipe Size, Inches	Nom. I.D.,1" All Classes	B.O.D.,1" Min. 2400	Heavy	Extra Heavy	6000/7000
8 x 8	8.00	9.06	9.24	---	---
10 x 10	10.00	11.14	11.30	11.58	---
12 x 12	12.00	13.24	13.46	13.70	---
14 x 14	14.00	15.32	15.50	15.84	---
15 x 15	15.00	16.36	16.56	16.94	---
16 x 16	16.00	17.42	17.60	17.98	---
18 x 18	18.00	19.60	19.80	20.20	20.63
20 x 20	20.00	21.66	21.88	22.32	22.77
21 x 21	21.00	22.74	22.94	23.40	23.85
24 x 24	24.00	25.88	26.12	26.60	27.03

Branch Pipe Size, Inches	Nom. I.D.,2" All Classes	B.O.D.,2" Min. 2400	Heavy	Extra Heavy	6000/7000
4	4.00	4.87	4.87	---	---
5	5.00	5.98	5.98	---	---
6	6.00	7.04	7.04	---	---
8	8.00	9.06	9.24	---	---
10	10.00	11.14	11.30	11.58	---
12	12.00	13.24	13.46	13.70	---
14	14.00	15.32	15.50	15.84	---
15	15.00	16.36	16.56	16.94	---
16	16.00	17.42	17.60	17.98	---
18	18.00	19.60	19.80	20.20	20.63
20	20.00	21.66	21.88	22.32	22.77
21	21.00	22.74	22.94	23.40	23.85
24	24.00	25.88	26.12	26.60	27.03

L" 40.00" -3.00" 2400, Heavy, Extra Heavy and 6000/7000

Main Pipe Size, Inches	Branch Size, Inches 4	5	6	8	10	12	14	15	16	18	20	21	24
8 x 8	39	39	39	39									
10 x 10	39	39	39	39	39								
12 x 12	39	39	39	39	39	39							
14 x 14	39	39	39	39	39	39	39						
15 x 15	39	39	39	39	39	39	39	39					
16 x 16	39	39	39	39	39	39	39	39	39				
18 x 18	39	39	39	39	39	39	52	52	52	52			
20 x 20	39	39	39	39	39	39	52	52	52	52	52		
21 x 21	39	39	39	39	39	39	52	52	52	52	52	52	
24 x 24	39	39	39	39	39	39	52	52	52	52	52	52	78

Note:

1. For main and branch machining dimensions, refer to standard pipe ends.
2. Right end of main shown above is to be prebelled (with certa-spacer) before shipment.

Branch Size, In.	C" +.04" -.01" 2400	Heavy	Ex. Heavy	6000/7000
4	4.89	4.89	---	---
5	6.00	6.00	---	---
6	7.06	7.06	---	---
8	9.08	9.08 *	---	---
10	11.16	11.32	11.60	---
12	13.26	13.48	13.72	---
14	15.34	15.52	15.86	---
15	16.38	16.58	16.96	---
16	17.44	17.62	18.00	---
18	19.62	19.82	20.72	20.72 *
20	21.68	21.90	22.34	22.34 *
21	22.76	23.05	23.68	23.68 *

*Branch end may have to be machined to fit.

CTD015244

TECHNICAL SPECIFICATIONS

CertainTeed

CertainTeed Corporation
Pipe and Plastics Group

SPECIFICATIONS CLASSIFICATION: A/C Standard Purchasing Specification		
T.C.O. REF. NO. 2	SPECIFICATION NO: 564	PAGE NO.: 33
SUPERSEDES: March 8, 1979	DATE OF ISSUE: JUL 17 1979	

DESCRIPTION:

Outside Purchased A/C Sewer Fittings

L_P" +.00" -.25" All Classes

Main Size, Inches	Branch Size, Inches 4	5	6	8	10	12	14	15	16	18	20	21	24
8 x 8	9.9	9.9	9.9	11.4									
10 x 10	10.2	10.2	10.2	11.7	13.2								
12 x 12	10.2	10.2	10.2	13.1	13.1	14.6							
14 x 14	10.5	10.5	10.5	14.5	14.5	14.5	16.0						
15 x 15	11.4	12.1	12.7	14.1	15.4	16.7	17.9	18.6					
16 x 16	10.5	10.5	10.5	16.4	16.4	16.4	16.4	16.4	17.4				
18 x 18	11.2	11.2	11.2	18.2	18.2	18.2	18.2	18.2	18.2	19.7			
20 x 20	11.2	11.2	11.2	19.6	19.6	19.6	19.6	19.6	19.6	19.6	21.1		
21 x 21	12.0	12.6	13.3	14.7	15.9	17.2	18.5	19.1	19.7	21.1	22.3	23.0	
24 x 24	11.3	11.3	11.3	21.3	21.3	21.3	21.3	21.3	21.3	21.3	21.3	21.3	23.8

L_C" +.00" -1.00" All Classes

4	9.75
5	9.75
6	9.75
8	11.75
10	12.50
12	14.75
14	16.75
15	19.75
16	18.75
18	20.25
20	21.00
21	24.50

L_A" - All Classes

Main Size, Inches	Branch Size, Inches 4	5	6	8	10	12	14	15	16	18	20	21	24
8 x 8	12.5	12.5	12.5	14.0									
10 x 10	13.5	13.5	13.5	15.0	16.5								
12 x 12	14.0	14.0	14.0	17.0	17.0	18.5							
14 x 14	15.0	15.0	15.0	19.0	19.0	19.0	20.5						
15 x 15	16.2	16.9	17.5	18.9	20.1	21.4	22.7	23.3					
16 x 16	15.5	15.5	15.5	21.5	21.5	21.5	21.5	21.5	22.5				
18 x 18	17.0	17.0	17.0	24.0	24.0	24.0	24.0	24.0	24.0	25.5			
20 x 20	17.5	17.5	17.5	26.0	26.0	26.0	26.0	26.0	26.0	26.0	27.5		
21 x 21	18.6	19.3	19.9	21.3	22.6	23.9	25.1	25.8	26.4	27.7	29.0	29.6	
24 x 24	19.0	19.0	19.0	29.0	29.0	29.0	29.0	29.0	29.0	29.0	29.0	29.0	31.0

L_D" + .00" -.06"

	2400	Heavy	Ex. Heavy	6000/7000
8	6.15	6.07	---	---
10	6.85	6.71	6.47	---
12	7.03	6.84	6.64	---
14	7.23	7.08	6.78	---
15	9.15	9.04	8.82	---
16	7.41	7.26	6.93	---
18	8.53	8.35	8.01	7.79
20	8.74	8.55	8.17	7.95
21	9.87	9.76	9.49	9.23
24	8.59	8.38	7.96	8.19

F" - All Classes

Main Size, Inches	Branch Size, Inches 4	5	6	8	10	12	14	15	16	18	20	21	24
8 x 8	13.00	12.75	12.25	14.00									
10 x 10	14.00	13.75	13.50	15.75	16.25								
12 x 12	15.25	15.00	14.75	18.00	18.25	18.25							
14 x 14	16.50	16.00	15.75	17.25	17.25	19.00	20.25						
15 x 15	17.30	17.70	18.70	19.80	20.70	22.10	23.30	23.30					
16 x 16	17.50	17.25	17.00	18.25	18.50	20.00	21.50	22.00	23.25				
18 x 18	18.75	18.50	18.00	19.50	19.50	21.25	22.50	23.00	24.00	25.75			
20 x 20	20.00	19.50	19.25	20.50	20.75	22.25	23.75	24.25	25.25	26.00	27.50		
21 x 21	20.70	21.10	21.60	23.20	24.10	25.50	26.70	27.10	27.60	28.90	29.30	29.60	
24 x 24	22.75	22.00	21.50	23.00	23.00	24.75	26.00	26.50	27.50	28.50	28.50	27.50	31.00

L_E" +.00" -.06"

	2400	Heavy	Ex. Heavy	6000/7000
8	15.63	16.73	---	---
10	19.72	19.76	19.84	---
12	22.32	22.39	22.45	---
14	24.92	24.97	25.07	---
15	28.05	28.16	28.38	---
16	27.53	27.58	27.69	---
18	31.16	31.24	31.35	31.61
20	33.75	33.82	33.94	34.25
21	36.13	36.24	36.51	36.77
24	38.47	38.54	38.68	39.41

L_C" ± .25"

Pipe Size, In.	2400	Heavy	Extra Heavy	6000/7000
8	11.34	11.30	---	---
10	13.04	13.00	12.91	---
12	14.43	14.40	14.30	---
14	15.83	15.80	15.69	---
15	18.60	18.60	18.60	---
16	18.22	18.19	18.09	---
18	19.59	19.55	19.42	19.42
20	21.25	21.19	21.06	21.06
21	23.00	23.00	23.00	23.00
24	23.53	23.46	23.32	23.32

L_F" ± .25"

Pipe Size, In.	2400	Heavy	Extra Heavy	6000/7000
8	6.00	5.92	---	---
10	6.60	6.52	6.22	---
12	6.78	6.73	6.40	---
14	6.98	6.88	6.55	---
15	9.15	9.04	8.82	---
16	8.17	8.08	7.75	---
18	8.28	8.10	7.76	7.51
20	8.74	8.55	8.17	7.91
21	9.87	9.76	9.49	9.23
24	8.59	8.38	7.97	7.71

PREPARED BY:	APPROVED BY:	R & D	MFG.	SALES	I.E.	OTHERS
FJS	mrs			J.R.A.		CHS

Tee Fitting

Non-Reducing

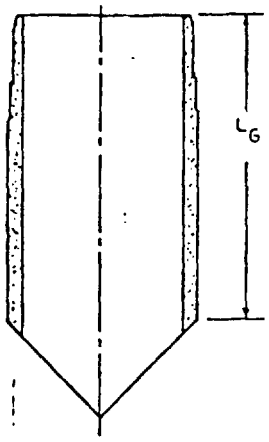

Reducing

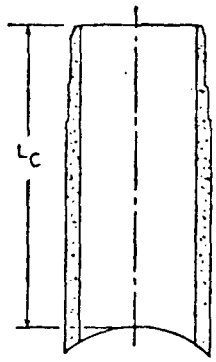

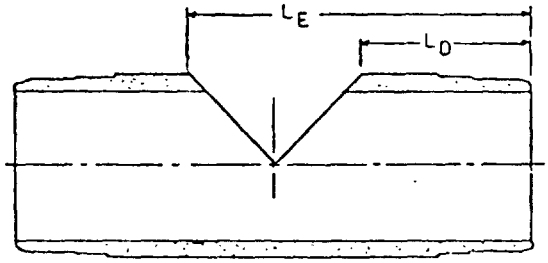

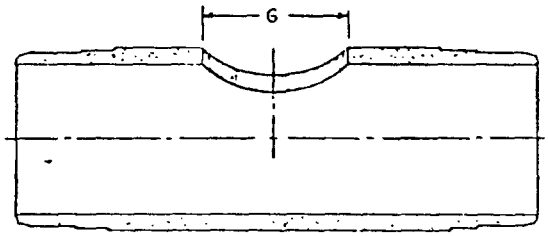

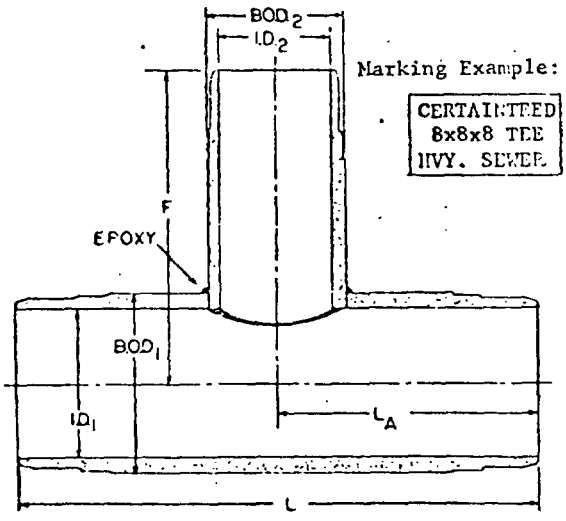

Marking Example:

CERTAINTEED
8x8x8 TEE
HVY. SEWER

Main Pipe Size, Inches	Nom. I.D.,1" All Classes	B.O.D.,1" Min. 2400	Heavy	Extra Heavy	6000/7000
8 x 8	8.00	9.06	9.24	---	---
10 x 10	10.00	11.14	11.30	11.58	---
12 x 12	12.00	13.24	13.46	13.70	---
14 x 14	14.00	15.32	15.50	15.84	---
15 x 15	15.00	16.36	16.56	16.94	---
16 x 16	16.00	17.42	17.60	17.98	---
18 x 18	18.00	19.60	19.80	20.20	20.63
20 x 20	20.00	21.66	21.88	22.32	22.77
21 x 21	21.00	22.74	22.94	23.40	23.85
24 x 24	24.00	25.88	26.12	26.60	27.03

Branch Pipe Size, Inches	Nom. I.D.,2" All Classes	B.O.D.,2" Min. 2400	Heavy	Extra Heavy	6000/7000
4	4.00	4.87	4.87	---	---
5	5.00	5.98	5.98	---	---
6	6.00	7.04	7.04	---	---
8	8.00	9.06	9.24	---	---
10	10.00	11.14	11.30	11.58	---
12	12.00	13.24	13.46	13.70	---
14	14.00	15.32	15.50	15.84	---
15	15.00	16.36	16.56	16.94	---
16	16.00	17.42	17.60	17.98	---
18	18.00	19.60	19.80	20.20	20.63
20	20.00	21.66	21.88	22.32	22.77
21	21.00	22.74	22.94	23.40	23.85
24	24.00	25.88	26.12	26.60	27.03

L" +0.00" -3.00" 2400, Heavy, Extra Heavy and 6000/7000

Main Pipe Size, Inches	Branch Size, Inches 4	5	6	8	10	12	14	15	16	18	20	21	24
8 x 8	39	39	39	39									
10 x 10	39	39	39	39	39								
12 x 12	39	39	39	39	39	39							
14 x 14	39	39	39	39	39	39	39						
15 x 15	39	39	39	39	39	39	39	39					
16 x 16	39	39	39	39	39	39	39	39	39				
18 x 18	39	39	39	39	39	39	52	52	52	52			
20 x 20	39	39	39	39	39	39	52	52	52	52	52		
21 x 21	39	39	39	39	39	39	52	52	52	52	52	52	
24 x 24	39	39	39	39	39	39	52	52	52	52	52	52	78

C" +.04" -.01"

Branch Size, In.	2400	Heavy	Ex. Heavy	6000/7000
4	4.89	4.89	---	---
5	6.00	6.00	---	---
6	7.06	7.06	---	---
8	9.08	9.08 *	---	---
10	11.16	11.32	11.60	---
12	13.26	13.48	13.72	---
14	15.34	15.52	15.86	---
15	16.38	16.58	16.96	---
16	17.44	17.62	18.00	---
18	19.62	19.82	20.72	20.22 *
20	21.68	21.90	22.34	22.34 *
21	22.76	23.05	23.68	23.68 *

Note:

1. For main and branch machining dimensions, refer to standard pipe ends.
2. Right end of main shown above is to be preballed (with certa-spacer) before shipment.

*Branch end may have to be machined to fit.

TECHNICAL SPECIFICATIONS

CertainTeed

CertainTeed Corporation
Pipe and Plastics Group

SPECIFICATIONS CLASSIFICATION:
A/C Standard Purchasing Specification

T.C.O. REF. NO.	SPECIFICATION NO:	PAGE NO.:
2	564	35

SUPERSEDES:	DATE OF ISSUE:
March 8, 1979	JUL 17 1979

DESCRIPTION:

Outside Purchased A/C Sewer Fittings

L_C +.000" -0.500" - All Classes

Pipe Size, Inches	Branch Size, Inches											
	4	5	6	8	10	12	14	15	16	18	20	21
8 x 8	4.75	4.75	6.25									
10 x 10	5.00	5.00	6.50	6.50								
12 x 12	5.00	5.00	6.50	6.50	6.75							
14 x 14	5.00	5.00	6.50	6.50	7.00	7.00						
15 x 15	7.00	7.00	7.00	8.10	8.10	8.60	9.10					
16 x 16	5.00	5.00	6.50	6.50	7.00	7.00	7.25	7.00				
18 x 18	5.25	5.25	6.75	6.75	7.25	7.25	7.50	7.25	7.50			
20 x 20	5.25	5.25	6.75	6.75	7.25	7.25	7.50	7.50	7.50	8.25		
21 x 21	7.40	7.40	7.40	8.50	8.50	9.00	9.50	9.50	9.50	10.00	10.00	
24 x 24	5.50	5.50	6.75	7.00	7.50	7.50	7.50	7.50	7.50	8.25	8.25	8.25

F" - All Classes

Main Size, Inches	Branch Size, Inches												
	4	5	6	8	10	12	14	15	16	18	20	21	24
8 x 8	8.75	8.75	10.25	10.25									
10 x 10	10.00	10.00	11.50	11.50	11.75								
12 x 12	11.00	11.00	12.50	12.50	12.75	12.75							
14 x 14	12.00	12.00	13.50	13.50	14.00	14.00	14.25						
15 x 15	14.50	14.50	14.50	15.60	15.60	16.10	16.60	16.60					
16 x 16	13.00	13.00	14.50	14.50	15.00	15.00	15.25	15.00	15.25				
18 x 18	14.25	14.25	15.75	15.75	16.25	16.25	16.50	16.25	16.50	17.25			
20 x 20	15.25	15.25	16.75	16.75	17.25	17.25	17.50	17.50	17.50	18.25	18.25		
21 x 21	17.90	17.90	17.90	19.00	19.00	19.50	20.00	20.00	20.00	20.50	20.50	20.50	
24 x 24	17.50	17.50	18.75	19.00	19.50	19.50	19.50	19.50	19.50	20.25	20.25	20.25	20.25

L_A" ± .25" - All Classes

8 x 8 x 4	through	8 x 8 x 8	11.0
10 x10 x 4	through	10 x10 x 10	12.5
12 x12 x 4	through	12 x12 x 12	13.5
14 x14 x 4	through	14 x14 x 14	14.5
15 x15 x 4	through	15 x15 x 15	16.6
16 x16 x 4	through	16 x16 x 16	16.5
18 x18 x 4	through	18 x18 x 18	18.5
20 x20 x 4	through	20 x20 x 12	13.0
20 x20 x 14	through	20 x20 x 20	19.5
21 x21 x 4	through	21 x21 x 12	15.5
21 x21 x 14	through	21 x21 x 20	19.9
21 x21 x 21			20.5
24 x24 x 4	through	24 x24 x 12	13.0
24 x24 x 14	through	24 x24 x 21	19.5
24 x24 x 24			21.5

L_C" ± .25"

Pipe Size, In.	2400	Heavy	Extra Heavy	6000/ 7000
8	5.63	5.72	---	---
10	6.18	6.13	5.96	---
12	6.13	6.08	5.91	---
14	6.59	6.53	6.34	---
15	8.40	8.40	8.40	---
16	6.54	6.49	6.30	---
18	7.45	7.35	7.15	6.94
20	7.42	7.31	7.09	6.87
21	9.13	9.03	8.80	8.58
24	7.31	7.19	6.95	6.74

L_D" + .00" -.06"

Pipe Size, In.	2400	Heavy	Extra Heavy	6000/ 7000
8	6.47	6.38	---	---
10	6.93	6.85	6.71	---
12	6.88	6.77	6.65	---
14	6.84	6.75	6.58	---
15	8.42	8.32	8.13	---
16	7.79	7.70	7.51	---
18	8.70	8.60	8.40	8.19
20	8.67	8.56	8.34	8.12
21	9.13	9.03	8.80	8.58
24	8.56	8.44	8.20	7.99

L_E" +.00" -.06"

Pipe Size, In.	2400	Heavy	Extra Heavy	6000/ 7000
8	15.53	15.62	---	---
10	18.07	18.15	18.29	---
12	20.12	20.23	20.35	---
14	22.16	22.25	22.42	---
15	24.78	24.88	25.07	---
16	25.21	25.30	25.49	---
18	28.30	28.40	28.60	28.82
20	30.33	30.44	30.66	30.89
21	31.87	31.97	32.20	32.43
24	34.44	34.56	34.80	35.02

PREPARED BY:	APPROVED BY:	R & D	MFG.	SALES	I.E.	OTHERS
FDS				J.R.A.		

02-10-0023 (P927) 12/76 CONFIDENTIAL DOCUMENT - NOT TO BE DISTRIBUTED TO UNAUTHORIZED PERSONNEL

A/C Manhole Adaptors for PSM PVC Sewer Pipe

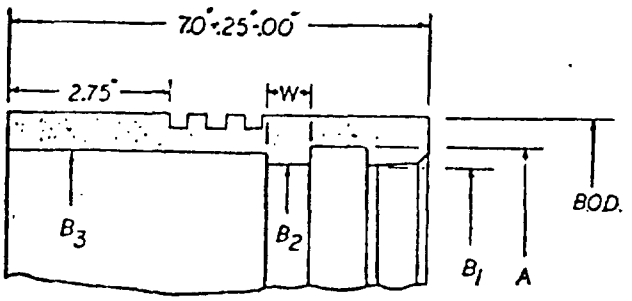

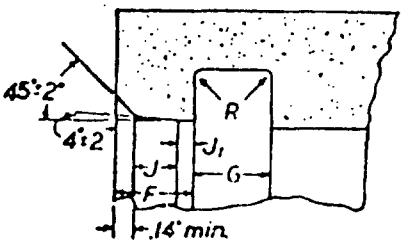

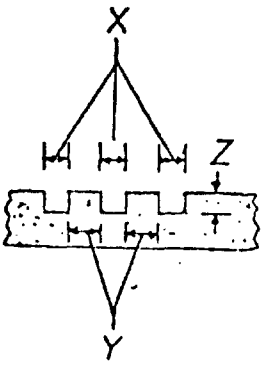

X" = .25 + 1/8" -1/16"

Y" = .375 Typ.

Z" = .20 + 1/16" -1/8"

Marking:

CERTAINTEED
(SIZE) PSM PVC
MANHOLE ADPT.

Size In.	Type	A" ±.025"	B_1" ±.025"	B_2" ±.025"	B_3" ±.025"	G" +.03" -.01"	J" +.00" -.04"	J1" +.02" -.00"	F" Min.	R" +.032" -.000"	W" +.03" -.00"	B.O.D." +.25" -.00"
4	PSM	5.04	4.47	4.37	4.86	.92	.42	.18	.76	.093	.80	6.11
6	PSM	7.10	6.53	6.36	6.92	.92	.42	.18	.76	.093	.80	8.33
8	PSM	9.03	8.65	8.48	9.04	.92	.42	.18	.76	.093	.80	10.59
10	PSM	11.32	10.75	10.58	11.14	.92	.42	.18	.76	.093	.80	12.75
12	PSM	13.32	12.75	12.58	13.14	.92	.42	.18	.76	.093	.80	15.00
15	PSM	16.22	15.55	15.38	15.94	.92	.42	.18	.76	.093	.80	18.26

TECHNICAL SPECIFICATIONS

CertainTeed

CertainTeed Corporation
Pipe and Plastics Group

SPECIFICATIONS CLASSIFICATION: A/C Standard Purchasing Specification

T.C.O. REF. NO.	SPECIFICATION NO:	PAGE NO.:
2	564	7

SUPERSEDES: DATE EFFECTIVE:

PRELIMINARY

DESCRIPTION:

Outside Purchased A/C Sewer Fittings

Fittings

Fitting markings are shown on the individual pages along with the fitting.

10.0 Special Information

1) Rings and Certa-spacers as required will be supplied to the vendor via CertainTeed's Ambler plant (only those fittings which are prebelled by the vendor or otherwise specified require rings and certa-spacers).

2) All fittings are to be shipped to the Ambler plant for inspection purposes. No fittings shall be shipped directly to a job without authorization from CertainTeed's Marketing and Quality Control Departments.

3) This specification and the information it contains is the property of CertainTeed. Under no circumstancesshall this specification or dimensional details herein be released to any unauthorized persons.

CTD015249

PREPARED BY:	APPROVED BY:	R & D	MFG.	SALES	I.E.	OTHERS
FT	MRS		DMS			CAS

PRELIMINARY

Standard Pipe

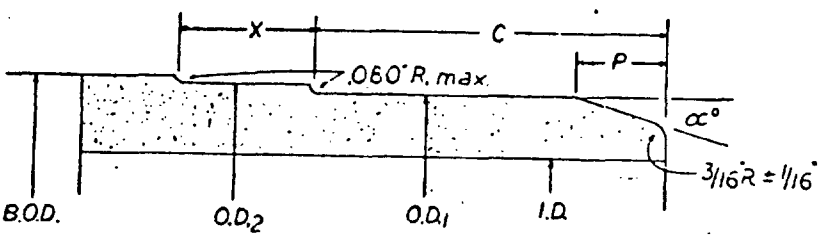

Dimensions

Pipe Size, Inches	Nom. I.D."	O.D.1"	O.D.2"	X" ±.06"	C" ±.06"	t" Min.	B.O.D." Min. Class 1500	Class 2400	Class 3300	Class 4000	Class 5000	Class 6000	Class 7000
4	4.00	4.62	4.78	1.15	2.09	.20	4.81	4.87	5.01				
5	5.00	5.66	5.82	1.15	2.09	.22	5.91	5.98	6.20				
6	6.00	6.66	6.82	1.15	2.09	.24	6.91	7.04	7.22				
8	8.00	8.80	8.96	1.15	2.44	.27	9.00	9.06	9.24				
10	10.00	10.89	11.05	1.15	2.81	.30	11.14	11.14	11.30	11.45	11.58		
12	12.00	12.99	13.15	1.15	2.81	.33	13.24	13.24	13.46	13.54	13.70		
14	14.00	15.07	15.23	1.15	3.19	.36	15.32	15.32	15.50	15.64	15.84		
15	15.00	16.11	16.27	1.15	3.19	.39	16.36	16.36	16.56	16.72	16.94		
16	16.00	17.15	17.31	1.15	3.19	.41	17.42	17.42	17.60	17.74	17.98		
18	18.00	19.23	19.48	1.15	3.81	.44		19.60	19.80	20.00	20.20	20.43	20.63
20	20.00	21.29	21.54	1.15	3.81	.48		21.66	21.88	22.10	22.32	22.55	22.77
21	21.00	22.37	22.53	1.15	3.81	.52		22.74	22.94	23.18	23.40	23.63	23.8
24	24.00	25.51	25.76	1.15	3.81	.56		25.88	26.12	26.36	26.60	26.79	27.03

Tolerance: O.D.1" and O.D.2" 4" through 16" ±.02"
18" through 24" ±.03"

Pipe Size, Inches	α° ±2°	P" ±.06"
4,5 and 6	14	.50
8	16	.50
10 and 12	16	.62
14,15 & 16	18	.68
18,20, 21 & 24	20	.75

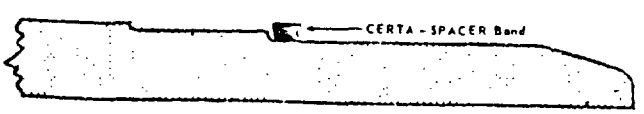

Certa-spacer bands are to be applied to pipe ends as shown above for the prebelled end of Wyes a Tees, and one end of each elbow. The band should be against the O.D.2 shoulder. (Bands may be heated to ease placement.)

TECHNICAL SPECIFICATIONS

CertainTeed CertainTeed Corporation Pipe and Plastics Group	SPECIFICATIONS CLASSIFICATION: A/C Standard Purchasing Specification		
	T.C.O. REF. NO.: 2	SPECIFICATION NO: 564	PAGE NO.: 8A
	SUPERSEDES:		DATE OF ISSUE: PRELIMINARY

DESCRIPTION:

Outside Purchased A/C Sewer Fittings

Old Design

14" and 16" Fluid-Tite Sewer and 15" and 21" CG Sewer Pipe

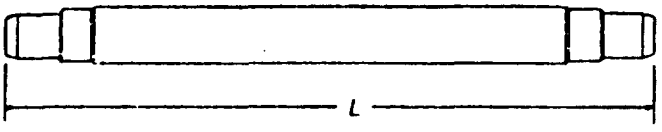

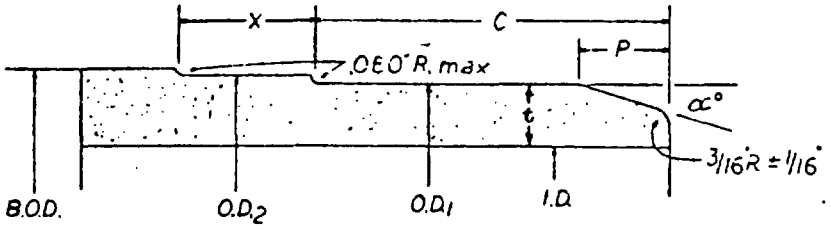

Standard, Random and Short Lengths

Dimensions

Pipe Size, Inches	Nom. I.D."	O.D.1" *	O.D.2" *	X" ±.06"	C" ±.06"	t" Min.	B.O.D." Min. Class 1500	Class 2400	Class 3300	Class 4000	Class 5000	Class 6000	Class 7000
14	14.00	15.07	15.23	1.15	3.06	.36	15.32	15.32	15.50	15.64	15.84		
15	15.00	16.11	16.27	1.50	3.25	.39	16.36	16.36	16.56	16.72	16.94		
16	16.00	17.15	17.31	1.15	3.06	.41	17.42	17.42	17.60	17.74	17.98		
21	21.00	22.37	22.53	1.50	3.75	.52		22.74	22.94	23.18	23.40	23.63	23.85

*Tolerance: O.D.1" and O.D.2" 14", 15" & 16" = ±.02"
21" = ±.03"

Pipe Size Inches	α° ± 2°	P" ± .063"
14	18	.625
15	15	1.000
16	18	.625
21	18	1.000

CTD015251

PREPARED BY:	APPROVED BY:	R & D	MFG.	SALES	I.E.	OTHERS
FP	MKS		[signature]	J.R.A.		CWS

Old Design

14" and 16" Fluid-Tite Sewer and 15" and 21" CG Sewer Couplings

PRELIMINARY

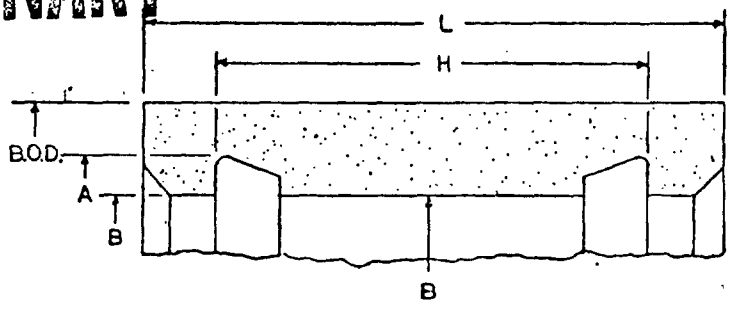

All Couplings except 15" and 21"

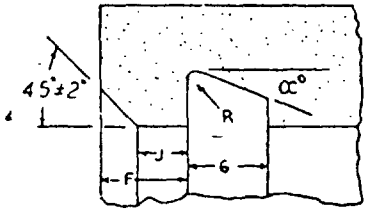

15" and 21" Coupling Sizes only

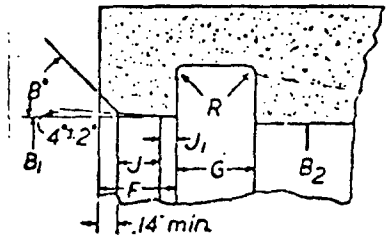

Dimensions

Coupling Size, In.	A" *	B" or B_1" *	B_2" *	H" +.00" -.06"	L" +.25" -.00"	B.O.D. +.25" -.00" Class 1500	Class 2400	Class 3300	Class 4000	Class 5000	Class 6000	Class 7000
14	15.87	15.19		5.25	7.00	17.15	17.15	17.15	17.48	17.48		
15	16.81	16.43	16.24	7.13	8.90	18.26	18.26	18.26	18.61	18.61		
16	17.95	17.27		5.25	7.00	19.31	19.31	19.31	19.68	19.68		
21	23.07	22.69	22.50	8.13	9.90		24.96	24.96	25.26	25.26	25.81	25.81

*Tolerance: A and B = 14" and 16" ±.025"
A, B_1 and B_2 = 15" +.050" -.020"
21" ± .040"

Coupling Size, In.	F" Min.	G"** +.04" -.00"	J"** +.03" -.00"	R"** ±.01"	α° ± 2°	J_1" +.02" -.00"	B° ± 2°
14 and 16	.75	.62	.50	.20	18		
15 and 21	.76	1.11	.42	.06		.18	45

**Tolerance 15" and 21" G" = ±.03"
J" = +.00" -.04"
R" = Max.

CTD015252

TECHNICAL SPECIFICATIONS

CertainTeed

CertainTeed Corporation
Pipe and Plastics Group

SPECIFICATIONS CLASSIFICATION: A/C Standard Purchasing Specification

T.C.O. REF. NO.	SPECIFICATION NO:	PAGE NO.:
2	564	9

SUPERSEDES: DATE OF ISSUE:

PRELIMINARY

DESCRIPTION:

Outside Purchased A/C Sewer Fittings

Standard Coupling

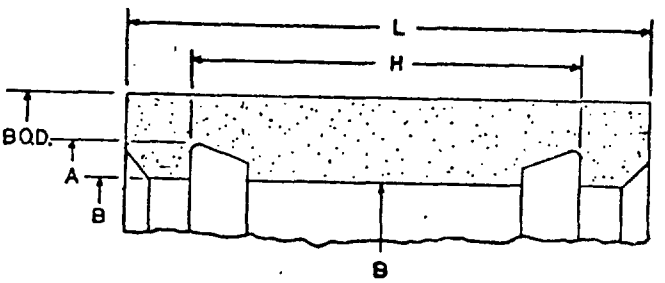

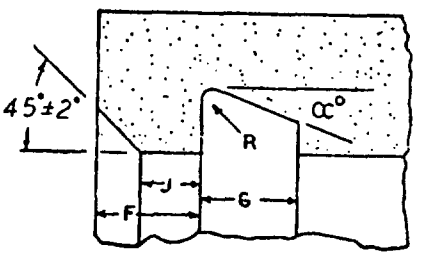

Dimensions

Coupling Size, In.	A"	B"	H" +.00" -.06"	L" +.25" -.00"	B.O.D." +.25" -.00" Class 1500	Class 2400	Class 3300	Class 4000	Class 5000	Class 6000	Class 7000
4	5.24	4.71	3.50	4.75	5.92	5.92	6.00				
5	6.28	5.75	3.50	4.75	7.06	7.06	7.14				
6	7.28	6.75	3.50	4.75	8.12	8.12	8.20				
8	9.55	8.89	4.00	5.75	10.50	10.50	10.59				
10	11.64	11.00	4.75	6.50	12.75	12.75	12.75	13.00	13.00		
12	13.74	13.10	4.75	6.50	15.00	15.00	15.00	15.24	15.24		
14	16.07	15.19	5.51	7.25	17.15	17.15	17.15	17.48	17.48		
15	17.11	16.23	5.51	7.25	18.26	18.26	18.26	18.61	18.61		
16	18.15	17.27	5.51	7.25	19.31	19.31	19.31	19.68	19.68		
18	20.48	19.36	6.50	8.25		21.63	21.63	22.09	22.09	22.47	22.47
20	22.54	21.42	6.50	8.25		23.81	23.81	24.15	24.15	24.67	24.67
21	23.62	22.50	6.50	8.25		24.96	24.96	25.26	25.26	25.81	25.81
24	26.70	25.64	6.50	8.25		28.22	28.22	28.69	28.69	29.15	29.15

Tolerance: A and B - 4" through 16" ±.025"
18" through 24" ±.040"

Coupling Size, In.	F" Min.	G +.04" -.00"	J" +.03" -.00"	R" +.01"	α° +2°
4", 5" & 6"	.50	.50	.35	.156	13
8", 10", 12",	.75	.62	.50	.20	18
14",15", & 16"	.75	.75	.50	.20	16
18",20", 21" & 24"	.75	1.00	.63	.25	12

CTD015253

PREPARED BY:	APPROVED BY:	R & D	MFG.	SALES	I.E.	OTHERS
FJS	mkb			J.R.A		

PRELIMINARY

SLEEVE ADAPTOR

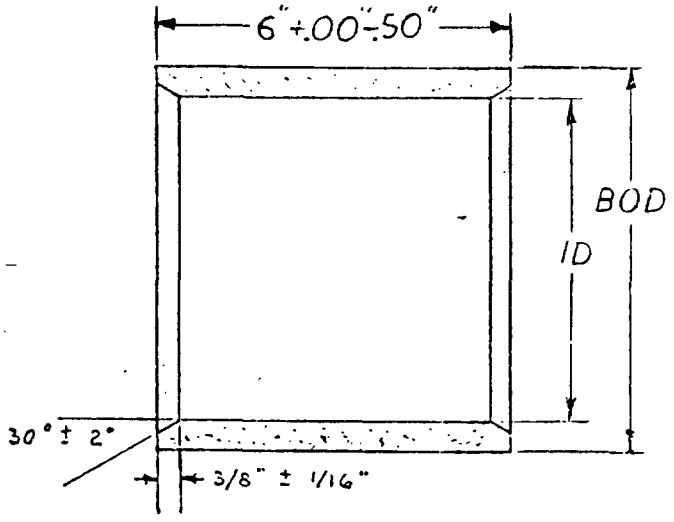

Dimensions

Pipe Size, Inches	I.D.2" ±.030"	B.O.D." Min.
4	5.45	6.42
5	6.50	7.50
6	7.50	8.67

Marking Example:

CERTAINTEED
4"SEWER SLEEVE
ADPT.

CTD015254

TECHNICAL SPECIFICATIONS

CertainTeed

CertainTeed Corporation
Pipe and Plastics Group

SPECIFICATIONS CLASSIFICATION: A/C Standard Purchasing Specification		
T.C.O. REF. NO. 1	SPECIFICATION NO: 564	PAGE NO.: 37
SUPERSEDES:	DATE OF ISSUE: MAR 8 1979	

DESCRIPTION:

Outside Purchased A/C Sewer Fittings

A/C Manhole Adaptors for 18" thru 27" PVC Sewer Pipe

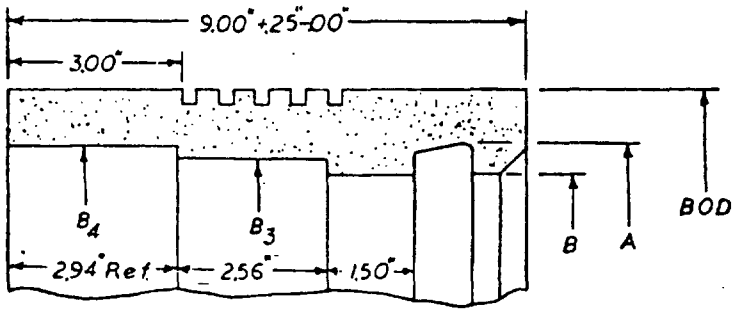

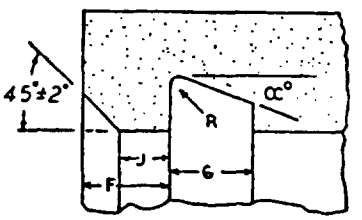

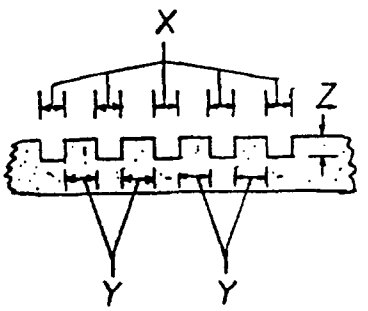

X" = .25 + 1/8" -1/16"

Y" = .375 Typ.

Z" = .25 + 1/16" -1/8"

Marking:

CERTAINTEED
(SIZE) PVC SEWER
MANHOLE ADPT.

Size, In.	PVC Use	A" ±.040"	B" ±.040"	B_3" ±.040"	B_4" ±.040"	G" +.04" -.00"	J" +.03" -.00"	F" Min.	R" ±.01"	α° ±2°	B.O.D." +.25" -.00"
18	PSM Sewer	19.95	18.83	19.33	19.83	1.00	.50	1.00	.25	12	21.80
21	PSM Sewer	23.31	22.19	22.69	23.19	1.00	.50	1.00	.25	12	25.40
24	PSM Sewer	26.08	24.96	25.46	25.96	1.00	.50	1.00	.25	12	28.30
27	PSM Sewer	29.25	28.13	28.63	29.13	1.00	.50	1.00	.25	12	31.70

CTD015255

PREPARED BY:	APPROVED BY:	R & D	MFG.	SALES	I.E.	OTHERS
JCH	MRS					

This page left intentionally blank

TECHNICAL SPECIFICATIONS

CertainTeed

CertainTeed Corporation
Pipe and Plastics Group

SPECIFICATIONS CLASSIFICATION: A/C Standard Purchasing Specification		
T.C.O. REF. NO.	SPECIFICATION NO:	PAGE NO.:
1	564 Addendum	1
SUPERSEDES:		DATE OF ISSUE: MAR 8 1979

DESCRIPTION:

Outside Purchased A/C Sewer Fittings

NOT TO BE DISTRIBUTED TO VENDORS

1.0 General

This addendum is designed to show the sampling plan to be used for incoming inspection of fittings and other information that is considered to be pertinent.

2.0 Sampling

A lot is defined as the quantity of all fittings shipped on one order, received at one time and identified by a Purchase Order Number.

A sub-lot shall be defined as the number of fittings of a given type and size within the lot. A lot may contain one or many sub-lots.

2.1 In a shipment where the sample size exceeds the number of specimens in the sub-lot, then that sub-lot shall be sampled on the next order.

2.2 Where possible each specimen of a sub-lot shall be taken from a separate container. Where there are a considerable number in the container, more than one may be taken.

2.3 On sampling, if any individual sub-lot exceeds the reject number of the plan, that sub-lot shall be rejected. All other sub-lots may be accepted provided they are found to be within the sample plan.

For example, if on a shipment there are tees, wyes, end caps and increasers, and the sample consists of specimens of the tees, wyes, and end caps and if the tees have a reject number exceeding the plan, the tees shall be rejected, the wyes, end caps and reducer shall be accepted. On the next shipment, the increasers must be sampled.

2.4 If any vendor has three (3) consecutive rejections (lots or sub-lots) they shall be placed on tightened inspection, and Valley Forge, A/C Q.C. Manager notified.

CTD015257

PREPARED BY:	APPROVED BY:	R & D	MFG.	SALES	I.E.	OTHERS

TECHNICAL SPECIFICATIONS

CertainTeed

CertainTeed Corporation
Pipe and Plastics Group

SPECIFICATIONS CLASSIFICATION: A/C Standard Purchasing Specification		
T.C.O. REF. NO. 1	SPECIFICATION NO: 564 Addendum	PAGE NO.: 2
SUPERSEDES:		DATE OF ISSUE: MAR 8 1979

DESCRIPTION:

Outside Purchased A/C Sewer Fittings

NOT TO BE DISTRIBUTED TO VENDORS

2.5 All dimensions and workmanship shall be checked, however, some requirements are more critical than others. If a defect is found in any of the critical requirements, the sub-lot shall be rejected regardless of the reject number.

2.5.1 Critical Requirements

a) Any reject in the sealing area, i.e. cracks, dimensions, etc.

3.0 Sampling Plan

3.1 Normal Inspection

Sampling for normal inspection procedure shall be carried out according to the sampling plan in Table 1 which represents a 97.5 percent quality level.

Table 1

No. of Fittings In Sub-lot	Sample Size	Acceptable Defectives	Defectives Constituting Rejection
0 - 150	3	0	1
151 - 1200	8	0	1
1201 - 3200	13	0	1
3201 - 10,000	20	1	2

3.2 Tightened Inspection

Table 2

No. of Fittings in Sub-lot	Sample Size	Acceptable Defectives	Defectives Constituting Rejection
0 - 150	8	0	1
151 - 1200	13	0	1
1200 - 3200	20	0	1
3201 - 10,000	32	1	2

CTD015258

PREPARED BY:	APPROVED BY:	R & D	MFG.	SALES	I.E.	OTHERS

TECHNICAL SPECIFICATIONS

CertainTeed

CertainTeed Corporation
Pipe and Plastics Group

SPECIFICATIONS CLASSIFICATION: A/C Standard Purchasing Specification		
T.C.O. REF. NO.	SPECIFICATION NO:	PAGE NO.:
1	564 Addendum	3
SUPERSEDES:		DATE OF ISSUE: MAR 8 1979

DESCRIPTION:

Outside Purchased A/C Sewer Fittings

NOT TO BE DISTRIBUTED TO VENDORS

4.0 Rejection

The following procedure shall be followed on all rejected shipments:

4.1 The Headquarters Purchasing Department shall be notified. They will issue instructions on when and how the shipment is to be returned.

4.2 Quality Control Headquarters (A/C) shall be notified. If requested, defective samples shall be forwarded to the Quality Control Manager.

5.0 Approved Vendors

JNC Limited
Ontario, Toronto, Canada

Special Note to the Ambler Plant - JNC fabricates fittings from pipe purchased from Canadian JM. They will be shipped to Ambler on pallets with shrink wrap covering.

When placing an order with JNC the plant should determine the rings*, certa-spacers , and A/C discs required and ship them to JNC.

Fittings may be stored and shipped as packaged by JNC. Those packages opened for sampling purposes shall be repackaged by Ambler.

*JNC needs rings for only those fittings which are prebelled.

CTD015259

PREPARED BY:	APPROVED BY:	R & D	MFG.	SALES	I.E.	OTHERS

TECHNICAL SPECIFICATIONS

CertainTeed

CertainTeed Corporation
Pipe and Plastics Group

SPECIFICATIONS CLASSIFICATION: A/C Standard Purchasing Specification		
T.C.O. REF. NO. 3	SPECIFICATION NO: #564 Addendum	PAGE NO.: 4
SUPERSEDES:	DATE OF ISSUE: JUL 17 1979	

DESCRIPTION:

Outside Purchased A/C Sewer Fittings

NOT TO BE DISTRIBUTED TO VENDORS

6.0 Waiver on 6" B.O.D.$_2$ Dimension

Ref: Letter dated 3/23/79 from Mr. Marvin R. Streepy to Mr. John Clinton (JNC Limited).

It has been agreed upon to accept the B.O.D.$_2$ dimension of 6" Branches for Tees and Wyes at 7.00" minimum as an alternate to the 7.04" minimum specified in Purchasing Spec. #564. This action permits the use of a core cutter more suited to the 7.00" dimension. All other properties and dimension shall remain in effect.

NOTE: Waiver is only temporary.

CTD015260

PREPARED BY:	APPROVED BY:	R & D	MFG.	SALES	I.E.	OTHERS
FJS				J.R.A.		