243, 244, 246, 247, (262) C.V.

MAKING INSTRUCTIONS: ~~BATCH~~ UNIT

D.V.

CG 03 CODE KY-787-D PKG.

→ DEC28 33540

EST. WGT. 2230 LBS.

STD. HRS. TIME 5P M

PROCESSES		APPROVED BY
( ) KY-787-D	(S)	EWK 10-19-77
( ) Alternate	( )	DCG 10-25-77
( )	( )	MTW 10-26-77
( )	( )	FWP 02-01-79
TYPED BY		
emw020179		

OR H

14 YC-2-B 93 4 Lot 24071, 4000#

14 YC-2-B 93 4 Lot 24198, 1000#

14 YC-2-B 93 4 Lot _____, _____#

FM

Total Wgt 7230# (REQ _____)

NON-BLEEDING

MENT		NAME: KROLOR® YELLOW MEDIUM	USE LBS.	N CODE	ACCT, LBS.
203	1	Run 50" (827 G) water into V-203 AND ADD	30	7-D	15
&	2	Weigh in drum & pour in	670	32-D	670
205	3	Dump in & stir 5 min Lot	100 x 50	YC-2-B	5000
1		Record: Start 10:30 AM Lot 24071	4,000		
		Fin 7:30 P.M 24198	1,000		
		35" (1375 G)			
	4	Adj to ~~80"~~ (1360 G)			
V-263	5	Pump V-203 thru Homog at 2400-2600 psi into V-~~205~~			
	6	When V-203 MTY, wash color thru Homog at 1800-2200 psi using minimum water. Use Hot Water			
→	7	Record: V-~~205~~ Vol 7.3 " & adj to 54" (1900 G)			
	8	Inspect Homog strainer & clean if necessary			
SV	9	Run " (200 G) water into V-262 & install temp chart			
&		& start agitator			
205	10	Pump V-205 thru Homog at 4800-5200 psi into SV-262			
2		Record: Time Start 11:10, Total Min 150			
		NOTE: If Homog pressure falls below 4800 psi 3-way valve will recirculate slurry to V-205			
	11	When V-205 MTY, run in 5" (240 G) water & pump thru Homog at 4800-5200 psi. Rinse in using Hot Water			
349	12	While Homog, run 6" (284 G) water into V-349			
&	13	Run ± 1000 # water into V-384 & heat to 110-120°F			
384	14	Weigh into V-384 & pump to V-349	3830	32-D	3830
3	15	Run ± 1000 # water into V-384 & pump to V-349			
	16	Adj V-349 to 25" (1163 G) & stir 15 min or longer			
	17	Record: °Be' 1.114 (15.2 ± 0.2) (1.113 - 1.117) g/ml			
SV	18	When S 11 Homog complete, adj SV to 2 " (2100 G)			
4	19	Record: pH 10.6 & adj to 11.1-11.3 using N-7-D diluted to 5% (10 parts water to 1 part N-7-D) Assume 50%	14	7-D	7
		Siphon into SV & Record: pH 11.2			
	20	Heat to 190-194°F in 35-45 min (V-262) or in 55-65 min (V-243, 244, 246, 247) &	-7		
		Record: HT 193 °F & Rec 194 °F			
		NOTE: Strike must be started immediately on completion of heating			
343	21	While heating SV, run 56" (1520 G) water into V-343			
&	22	Meter in from V-386 M 83, 9.88 #/Gal 58.0 Gal		27-D	573
386	23	Stir 15 min or longer			
5	24	Record: °Be' 1.028 (4.1 ± 0.1) (1.027-1.028) g/ml		FM	

V-262

EQUIPMENT		PAGE 2 CG 03 CODE KY-787-D (S) EST. WGT. 7230 LBS.	USE LBS.	N CODE	ACC LBS
SV 6	25	When S 20 heating complete, Record: pH 9.9 (9.6-10.2)			
	26	Set V-343 acid pump at 69 setting (± 255 min)			
	27	Set V-349 silicate pump at 60 setting (± 210 min)			
240 15	28	Immediately meter in V-343 & 349, maintain SV at 190-194°F during strike			
	29	Record: Start / Fin / Min			
		V-343 9:30 pm / 2:05 / 265			
		V-349 9:30 pm / 1:15A / 220			

Record:	Time	V-343 in	V-349 in	SV pH	Normal pH
at 20 min	9:50 pm	(52) 52	(22) 22	9.8	9.3-10.0
40 min	10:10 pm	(48) 48	(20) 20	9.8	9.3-10.0
1 hr	10:30 pm	(43) 44	(18) 18	9.8	9.3-10.0
2¼ hrs	11:45 pm	(27) +	(7) 7	9.5	9.3-10.0
3½ hrs	1:02 A	(10) +	(0) +	9.5	9.3-10.0
Finish	1:45A	(0)		7.6	7.5- 8.5

NOTE: (1) If pH not as specified, notify Supervisor & note in log
(2) If final pH is above 8.5, adj pH to 7.5-8.5 & Record: pH Assume 78% — 27-D

330 7	30	Run 22" (431 G) water into V-330 & heat to 160-170°F			
	31	Add in 12-13 min	700	530-A	700
	32	Stir 5 min & Record: pH 10.2 (9.5-10.5)			
	33	Stir 20 min or longer to dissolve for S 46			
357 8	34	Run 29" (210 G) water into V-357 & heat to 135-140°F			
	35	Dump in & stir to dissolve for S 42	350	15-A	350
302 9	36	Run 36" (440 G) water into V-302			
	37	Add & stir 2 min for S 44 Assume 50%	380	7-D	190
SV 10	38	When V-349 MTY, rinse in with minimum water then set pump to zero setting			
	39	When V-343 MTY, rinse in with minimum water then turn off pump motor			
	40	Turn off steam			
	41	Sift in	250	128-A	250
	42	Run in V-357 from S 35 & stir 5 min			
	43	Rrecord: pH 5.6 (3.7-4.2)			
	44	Run in N-7-D from S 37 in 10-12 min & stir 5 min			
	45	Record: pH 9.0 (9.0-9.5) & if necessary, adj to pH 9.0-9.5 & Record: pH Assume 78%		27-D	
		(Dilute 10 parts water to 1 part N-7-D) Assume 50%		7-D	
		Siphon N-7-D into SV			
	46	Run in V-330 thru 20 mesh screen & stir 20 min			
313 11	47	Run 15" (222 G) water into V-313 & dump in	270	20-A	270
	48	Stir 5 min to dissolve for S 49			
SV 12	49	Run V-313 into SV in 15-20 min			
	50	Stir 15 min			
	51	Record: pH 9.0 (9.0-10.0)			
	52	Stop agita Do not stop V-262			

Step	V-262 (RPM)	V-243, 244, 246, 247
9	2"	4"
18	20"	50"

START	FIN	OPTR
12:30 AM	9:00 AM	322-126

DUP050093393

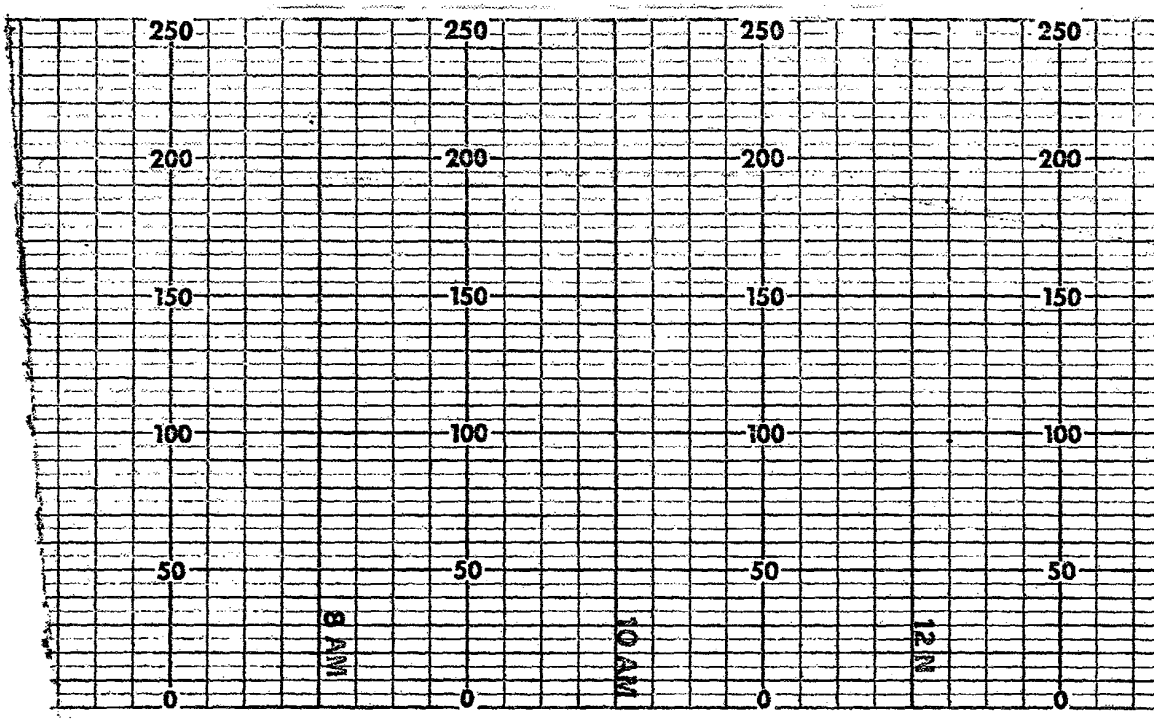

GRAPHIC CONTROLS CORPORATION BUFFALO, NEW YORK

DUP05009339

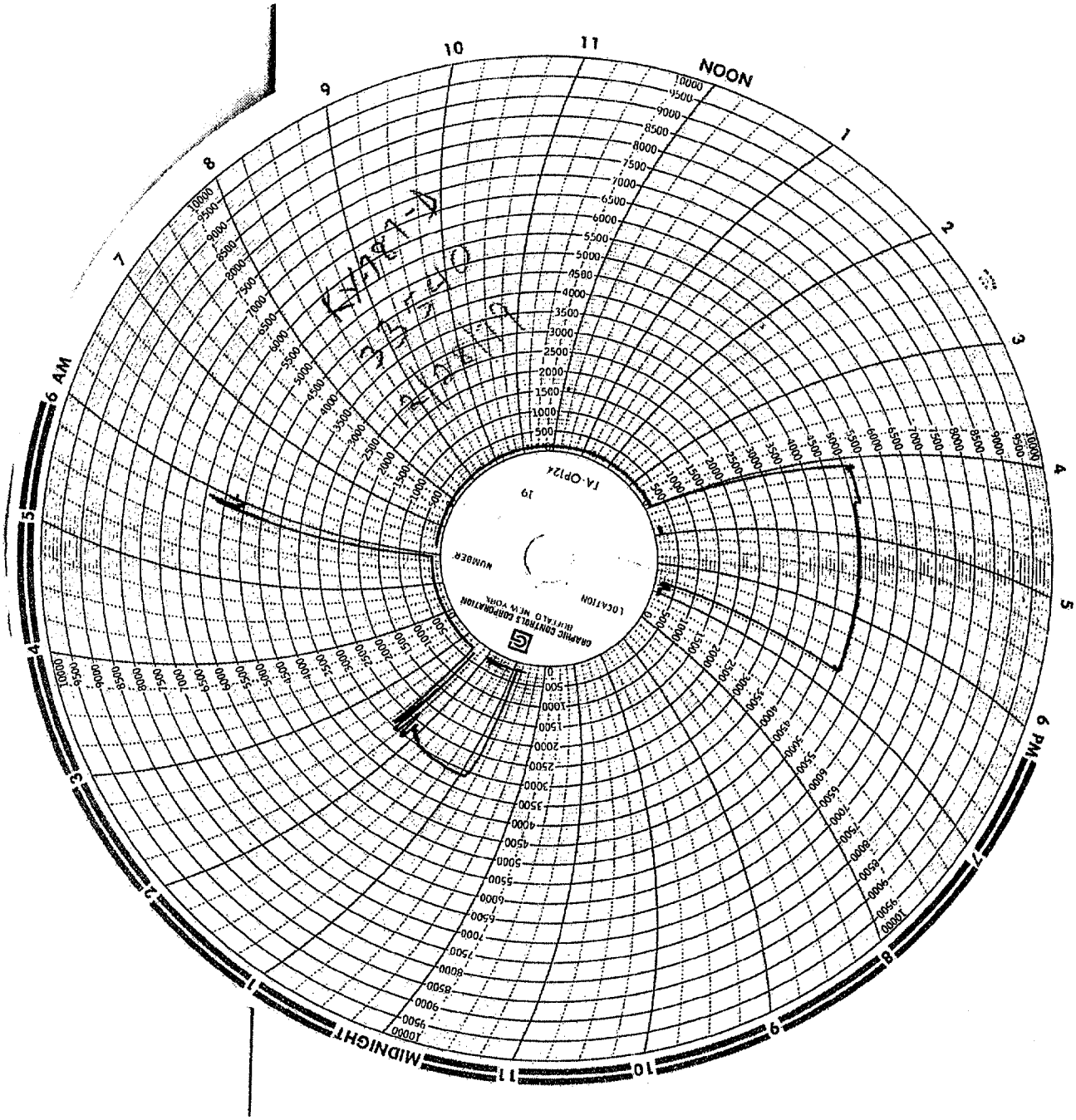
NOON
MIDNIGHT
6 AM
6 PM
GRAPHIC CONTROLS CORPORATION
BUFFALO NEW YORK
LOCATION
NUMBER
TA-OP124
19

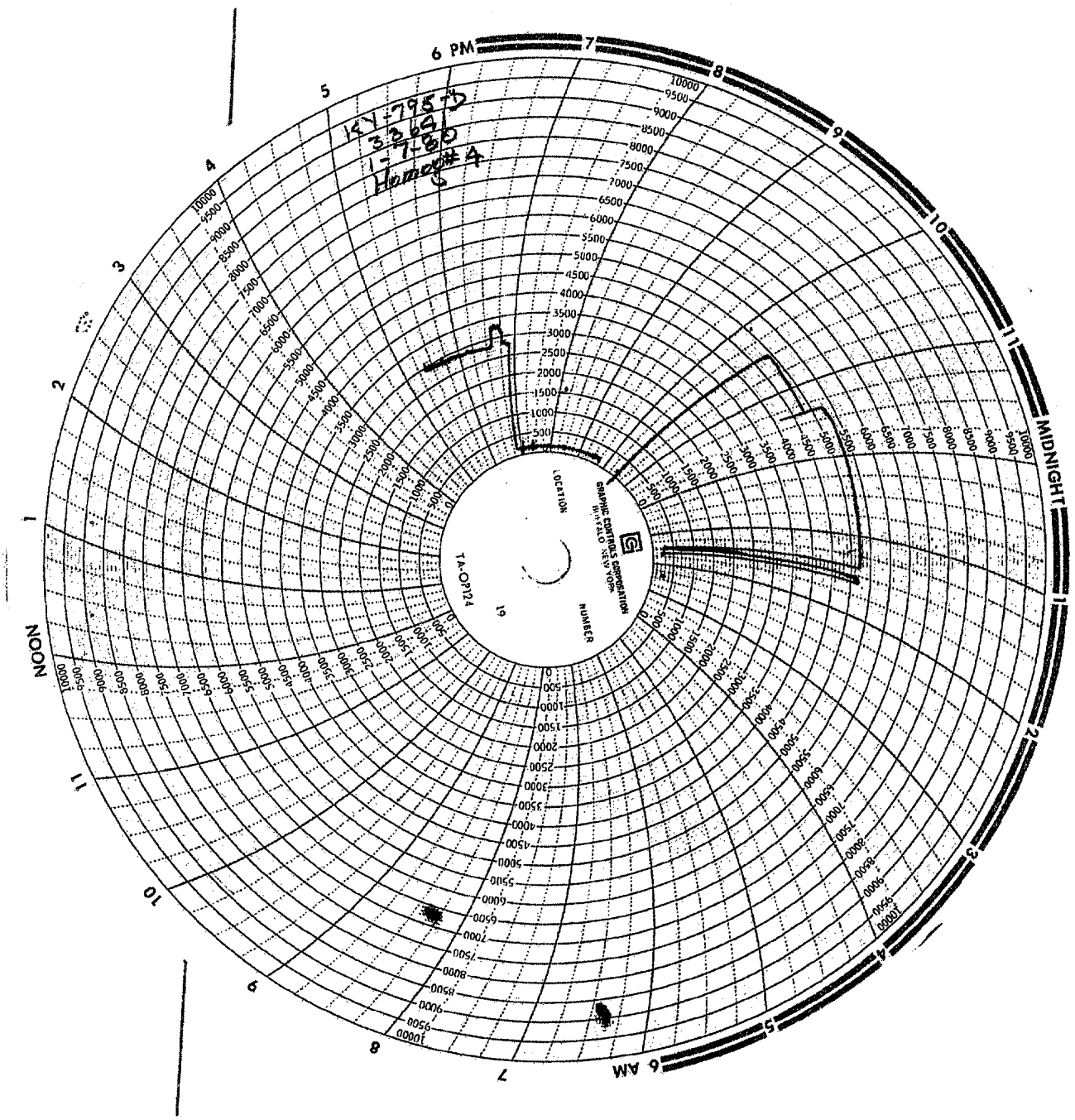

DUP050093396