PROGRESS REPORT - W. C. Schrichte
TECHNICAL SERVICES DEPT. - W. G. KRUMMRICH PLANT

JOB NO.	REPORT NO.	DATE
91370:4238	2	1,26,71

W.G. KRUMMRICH PLANT			GENERAL OFFICE	OTHERS
☒ G.L. Bratsch	*☒ R.M. McCutchan	☒	•☒ M.P. Lux	Anniston
*☒ D.W. Jackson	*☒ D.E. Harris	*☒	•☒ D. Danna (4)	•☒ J.C. Landwehr
*☒ T.W. Dalton	*☒ M.D. Dealy	*☒	•☒ D.B. Hosmer/ F.J. Holzapfel	Nitro
•☒ E.R. Billen	*☒ D. Weber	*☒	•☒ R.E. Howard	•☒ H.L. Williams
•☒ B.W. Corlew	*☒ E.B. Maurer	*☒	*☒ H.C. Carder	S. 2nd St.
*☒ G.C. Vincent	*☒ B.J. Hoffman	*☒	•☒ E.M. Potter	*☒ P.O. DeGarmo
*☒ W.C. Engman	*☒ W.W. Ban	*☒	•☒ J.R. Savage	*☒ T.M. Patrick
*☒ G.K. Dimkoff	*☒ W.A. Krull	*☒	•☒ J.E. Smith	*☒ J.F. Quinn
•☒ R.R. Sorrell	*☒ J.W. Boehm	*☒	*☒	*☒ R.L. Wiese
•☒ C.J. Koenig	*☒ F.M. Elliott	*☒		*☒ M.A. Terpstra/ D.K. Lynch

* TO RECEIVE DETAIL SECTION

TITLE: DEPARTMENT 218 (MURIATIC ACID) - STATUS - EVALUATE HCl RECOVERY

PERSONNEL: W. C. Schrichte (W. M. Dowden, D. C. Armstrong)

PROBLEM: Evaluate recovery of by-product HCl generated in Department 248 (Phosphate Esters) and unrecovered by-product HCl generated in Department 236-7 (Chlorophenols).

SUMMARY Based on the current production requirements for Depts. 233 (Chlorobenzenes), 246 (Aroclors), 248 (Phosphate Esters) and 236-7 (Chlorophenols), an additional 15.9 M lbs/year of by-product HCl could be recovered with an adiabatic absorber unit installed at WGK. The acid quality (thus the salability) will have to be determined by pilot plant tests, which will cost an estimated $26 M.

C.E.D. has estimated the capital cost for adiabatic absorption facilities at $750 M + 20%. The estimated new earnings based on shipping all the additional muriatic acid to customers in Chicago, Illinois is $154.4 M/year. The estimated ROI from the new earnings is 20.58% before taxes. By 1973 the HCl being sewered will have to be neutralized. The recovery of the 15.9 M lbs/year would save $65.5 M/year in future neutralization cost. The estimated ROI from new earnings and neutralization cost savings is 29.31% before taxes.

DSW 299037

COMPANY CONFIDENTIAL INFORMATION
This document is the property of Monsanto Company and the recipient is responsible for its safekeeping and disposition. It contains confidential information of Monsanto Company which must not be reproduced, revealed to unauthorized persons or sent outside the company without proper authorization. Either retain in secure files or destroy.

STLCOPCB4068949

CONCLUSIONS AND RECOMMENDATIONS:

1. The estimated return on net investment appears to justify the proposed adiabatic absorption project.

2. The success of the project depends on the quality of the acid. Therefore pilot plant tests are justified.

3. Approval for pilot plant test is recommended.

4. Proceed with project depending on pilot plant results.

Bill
W. C. Schrichte
Technical Services Department

/tm

DSW 299038

STLCOPCB4068950

TABLE OF CONTENTS

		Page
I.	BACKGROUND	4
II.	HCl AVAILABLE FOR MURIATIC ACID	5
III.	DESIGN CONSIDERATIONS	6
	A. General	7
	B. Capacity	7
	C. Storage	8
	D. Loading	9
	E. Design Uncertainties	9
IV.	COSTS	9
	A. Capital Cost Estimate	9
	B. Manufacturing Cost Estimate	9
V.	ESTIMATED RETURN ON INVESTMENT	13
VI.	CONCLUSIONS AND RECOMMENDATIONS	14

APPENDICES:

		Page
A.	Theoretical HCl Generation	16
B.	Estimated HCl Recoverable	20
C.	HCl Distribution System with Adiabatic Absorption	21
D.	Estimated Muriatic Acid Production with Adiabatic Absorption	22
E.	Equipment and Other Required Materials List	23
F.	Flow Sheets for Adiabatic Absorption	29
G.	Plot Plan and Major Equipment Layout	32
H.	Manufacturing Cost Estimates	34
I.	Incremental Cost Estimate	35

STLCOPCB4068951

I. BACKGROUND

Hydrogen Chloride (HCl) is produced as a by-product at the W. G. Krummrich Plant from hydrocarbon chlorination in Depts. 233 (Chlorobenzenes), 246 (Aroclors), 236-7 (Chlorophenols) and 265 (Chloroacetyl Chloride). By-product HCl is also produced in Dept. 248 (Phosphate Esters) from the reaction of $POCl_3$ with Phenol and Cresol. Hydrochloric (or muriatic) acid is produced by absorption of HCl gas in water.

At the present time, only HCl from Dept. 233, 246 and 236-7 is being recovered. The HCl from Dept. 233 is almost exclusively recovered in Dept. 218 (Muriatic Acid) with an occasional recovery in Dept. 217 (Chlorosulfonic Acid) when Dept. 236-7 is down. The HCl from Dept. 246 is recovered in both Dept. 218 and Dept. 217. The HCl from Dept. 236-7 is recovered only in Dept. 217 with the excess being sewered.

The recovery of the HCl from Dept. 248 and the excess HCl from Dept. 236-7 for Muriatic Acid is economically attractive at this time because of the increased sales demand as evidenced by our present "sold out" position. This increased sales demand is due in part to the steel mills converting their pickling lines over to using Muriatic Acid instead of Sulfuric Acid.

Recovery of Dept. 248's and Dept.s 236-7 unrecovered HCl will reduce WGK's stream pollution and future neutralization cost. Neutralization of HCl in WGK's sewers will be required by 1/1/73 (See TSD Report 91341:9000(6) by M. Pierle dated 3/13/70.)

Dept. 265's HCl is not recovered because: (1) the department is remotely located (North area) relative to Dept. 218 (main area), (2) the department's off gas is highly corrosive and, (3) treatment facilities are already in use.

The success experienced by the Delaware River Plant of adiabatically absorbing their HCl off gas from their Benzyl Chloride operation, tends to indicate a high success of making high quality acid from Dept. 248's and Dept. 236-7's unrecovered HCl. However, the expected quality of acid made by adiabatically absorbing Dept. 248's and Dept. 236-7's unrecovered HCl, cannot be stated without pilot plant results.

STLCOPCB4068952

II. HCl AVAILABLE FOR MURIATIC ACID

The normal HCl generation rates at the Krummrich Plant are:

1. Dept. 233 - 4500 to 5500 lbs/hr.
2. Dept. 246 - 3000 to 3500 lbs/hr.
3. Dept. 248 - 3500 to 4000 lbs/hr during 3 hours of an 8 hr. batch cycle time.
4. Dept. 236-7-4500 to 6000 lbs/hr during the first 2 hours,
   3000 to 3500 lbs/hr during the next hour,
   1500 to 2000 lbs/hr during the next 2 hours and
   750 to 1000 lbs/hr during the last 4 hours of an 11 hour batch cycle time.

The current production requirements (1971 thru 1975) for the HCl generating departments above and the corresponding theoretical HCl produced are shown in Appendix A. The total theoretical HCl produced (1971 thru 1975) and the estimated HCl recoverable is shown in Appendix B. The estimated HCl recoverable (Appendix B) is based on continued achievement of 85% recovery of Dept. 233's and Dept. 246's HCl. It is also based on achieving 80% recovery of Dept. 236-7's HCl and 80% recovery of the available HCl from Dept. 248.

With an adiabatic absorption unit installed, the HCl leaving the generating departments will be collected and distributed to the using departments as shown by the diagram in Appendix C. Distribution of HCl (normally) will be as follows:

1. Dept. 233's HCl will be recovered in the existing facilities and as needed to maintain a minimum feed rate (discussed in Design Considerations) in the adiabatic absorption facilities. The capability of recovering Dept. 233's HCl in Dept. 217 will still be maintained.
2. Dept. 246's HCl will be recovered in the proposed adiabatic absorption facilities and as needed in Dept. 217. When Dept. 217 is down the HCl will be recovered in the falling film facilities.
3. All of Dept. 248's available HCl will be recovered in the adiabatic absorption facilities.
4. Dept. 236-7's HCl will be recovered in Dept. 217 primarily with the excess being recovered in the adiabatic absorption facilities.

The existing automatic sewering valves will be kept in the generating departments the same as before.

DSW 299041

STLCOPCB4068953

II. HCl AVAILABLE FOR MURIATIC ACID (Continued)

Muriatic Acid production will continue to be limited by the availability of by-product HCl gas. Therefore, muriatic acid production will be set by the demand of the generating products rather than acid requirements. The estimated muriatic acid production with adiabatic absorption is shown in Appendix D.

III. DESIGN CONSIDERATIONS

A. General

An adiabatic absorption unit to recover Dept. 248's HCl, Dept. 246's HCl and Dept. 236-7's unrecovered HCl will be designed to handle a maximum of 9500 lbs/hour (100% HCl). This will permit recovery of the HCl available when the batch departments generate simultaneously. A unit designed to handle 9500 lbs/hr (100% HCl) will require a minimum feed rate of 1900 lbs/hr (100% HCl) to operate efficiently. Below the minimum feed rate, the tail gas losses will increase slightly.

The existing water softener unit will be replaced with a unit capable of supplying both absorption units. The existing carbon charging system will be replaced or modified to supply the existing and new carbon towers.

The crude acid leaving the bottom of the adiabatic absorber at its boiling point will be cooled to approximately 100°F. Two carbon towers in series will be used to remove residual organic impurities. Two 30 M gal. tanks will be used for intermediate storage and as receivers. Ion exchange facilities will be required to remove iron contamination when present. The acid will be stored as 20° Be' acid. A list of equipment and other required materials is attached as Appendix E. Flow sheets for the proposed adiabatic absorption process are attached as Appendix F.

All customers (the steel mills in Chicago, Ill.) will be supplied by tank car shipments.

STLCOPCB4068954

III. DESIGN CONSIDERATIONS (Continued)

B. Capacity

The design capacity feed rate and average feed rate (1973) are as follows:

	On Stream Time	% Yield	Design Rate	Average Rate
Feed Rate (100% HCl)	100%	100%	9500 Lbs/Hr	3690 Lbs/Hr
Feed Rate (100% HCl)	90%	95%	8125 Lbs/Hr	3150 Lbs/Hr
Daily Rate (100% HCl)	90%	95%	195 M Lbs/Day	75.6 M Lbs/Day
Daily Rate (20° Be')	90%	95%	62.9 M Gal/Day	24.4 M Gal/Day
Monthly Rate (100% HCl)	90%	95%	4.68 $\overline{M}$ Lbs/Mo.	2.27 $\overline{M}$ Lbs/Mo.
Annual Rate (100% HCl)	90%	95%	56.16 $\overline{M}$ Lbs/Yr.	27.21 $\overline{M}$ Lbs/Yr.

The total acid production with adiabatic absorption plus the existing unit is estimated to reach 54.4 gal/day of equivalent 20° Be' acid by 1973.

C. Storage

The finished product acid from the adiabatic absorption unit will be stored as 20° Be' acid in the existing 280 M gal. storage tank (Item No. 730). The finished product acid from the falling film absorption unit will be stored in two of the 17,000 gallon tanks and the three 40,000 gallon (existing tanks). When the storage for the falling film unit is full, the finished product acid will be diverted to the 280 M gal. storage tanks as 20° Be' acid. The proposed assignments of storage tanks are as follows:

STLCOPCB4068955

III. DESIGN CONSIDERATIONS

C. Storage (Continued)

PROPOSED ASSIGNMENTS OF STORAGE TANKS

Tank (Item No.)	Volume	Use
New	30 M Gal.	Receiver and intermediate storage for adiabatic unit
New	30 M Gal.	Receiver and intermediate storage for adiabatic unit
715	17 M Gal.	Receiver for existing absorption unit
716	17 M Gal.	23° Be' Acid (food grade)
717	17 M Gal.	Commercial Grade Acid
718	40 M Gal.	20° Be' (Food Grade)
719	40 M Gal.	22° Be' (Food Grade)
722	40 M Gal.	20° Be' (Food Grade)
730	280 M Gal.	20° Be' Acid from adiabatic unit
TOTAL	511 M Gal.	

D. Loading

Five acid tank car spots would be provided on the existing acid loading dock by relocating the monochlorobenzene tank car loading spot to a new dock along sub track 2A. A line from the 280 M gallon storage tank would provide a total of two loading lines to the dock.

DSW 299044

STLCOPCB4068956

III. DESIGN CONSIDERATIONS (Continued)

E. Design Uncertainties

Neither anticipated carbon usage nor expected acid quality can be stated without pilot plant results. The estimated pilot plant costs are:

Equipment	$10,000
Research Time (2 man-months)	8,000
TSD Time (4-1/2 man-months)	6,500
A.R. & D. Time	1,500
TOTAL	$26,000

Delivery of a pilot unit from Haveg would take approximately 10 weeks after receipt of order. Therefore, the earliest that pilot plant results could be available would be approximately 6 months.

IV. COSTS

A. Capital Cost Estimate

The Central Engineering Department estimated the capital cost to be $750 M ± 20%. A detailed estimate was not provided.

B. Manufacturing Cost Estimate

The manufacturing cost estimate for the adiabatic absorption unit is based on recovering 25.2 M lbs/year (1971, Appendix D). The estimated cost would be:

Raw Material	$1.571/cwt
Direct Conversion	0.628/cwt
Indirect Conversion	0.526/cwt
TOTAL MFG. COST	$2.725/cwt

DSW 299045

IV. COSTS

B. Manufacturing Cost Estimate (Continued)

The manufacturing cost estimate for the falling film unit would change since some of the HCl, which would normally be absorbed in it, would be absorbed in the adiabatic unit. The estimated cost for a production of 31.5 M lbs/year (1971, Appendix D) would be:

Raw Material.....	$1.722/cwt
Direct Conversion.....	0.535/cwt
Indirect Conversion.....	0.358/cwt
TOTAL MFG. COST	$2.615/cwt

The manufacturing cost estimate for the adiabatic absorption unit plus the falling film absorption unit (56.7 M lbs/year - 1971 basis) would be:

Raw Material.....	$1.655/cwt
Direct Conversion.....	0.576/cwt
Indirect Conversion.....	0.433/cwt
TOTAL MFG. COST	$2.664/cwt

The manufacturing cost estimates above are shown in Appendix H. The manufacturing cost estimates were determined as follows:

Raw Material - Standard yield of 95% on HCl gas and a unit price of $0.0135/lb. was used for both units. Carbon usage of 1.0 lbs/cwt of HCl (same as 1971 Std.) was used for the falling film unit. A carbon usage of 0.5 lbs/cwt of HCl was assumed for the adiabatic unit. The price of $0.2867/lb (same as 1971 Std.) was used for the carbon.

DSW 299046

STLCOPCB4068958

IV. COSTS

B. Manufacturing Cost Estimate (Continued)

Steam	- Steam usage for the adiabatic unit was based on Haveg's design. 25% extra was used for miscellaneous losses, etc. The price of $1.135/M BTU (1971 Std.) was used.
Electricity	- The cost for the adiabatic unit was assumed to be approximately the same as the falling film unit.
Water Purchased	- Water usage for the adiabatic unit was based on making 20° Be' acid and allowing 25% excess for vaporization. The usage for the falling film unit was determined based on the estimated production. The price of $0.176/M gal. (1971 Std.) was used.
Water Plant	- Water required for the adiabatic unit was assumed to be half that required for the falling film unit. The price of $0.055/M gal. (1971 Std.) was used.
Labor	- The labor cost was estimated based on adding one man on day shifts for loading tank cars and tank trucks. The cost was split equally between the two units.
Salaries	- No additional supervision was assumed. The salaries (1971 Std.) was split equally between the two units.
Payroll Overhead	- The hourly payroll overhead cost (23.296% of labor cost for 1971) and the salaried payroll overhead cost (19% of salaries for 1971) were split equally between the two units.
Supplies	- The supply cost was determined by assuming a 50% increase in the 1971 cost. The total cost was then split equally between the two units.

STLCOPCB4068959

IV. COSTS

B. Manufacturing Cost Estimate (Continued)

Laboratory	- The laboratory cost (1971 Std.) was adjusted to the production level for each unit.
Clothing & Laundry	- The cost on the 1971 Standard was increased by 21% (the percentage labor increased) and split equally between the two units.
Clothing & Laundry Safety	- Handled the same as clothing and laundry above.
Technical Services	- No increase in Technical Services was assumed. Cost (1971 Std.) was split equally between the two units.
Research	- A cost of $500/month for research follow-up from pilot plant was assembled for the adiabatic unit. The falling film unit had no cost allocated for it.
Mechanical Expense	-The mechanical expense for the adiabatic unit was estimated by averaging the past four years actual mechanical expense for the falling film unit. The average was inflated by 15% and assumed representative of the mechanical expense. The mechanical expense for the falling film unit was assumed the same as the 1971 Standard.
Depreciation	- The adiabatic unit was depreciated by using a ten year straight line with no scrap value. The 1971 Standard depreciation for the falling film unit was used.
Factory Indirect Expense	- The FIE for the adiabatic unit was assumed to be approximately the same as for the falling film unit (1971 Std.)

The incremental cost for the additional production of 1.33 M lbs/mo. are $38,798/month as shown in Appendix I.

DSW 299048

STLCOPCB4068960

V. ESTIMATED RETURN ON INVESTMENT

The estimated new earnings based on shipping the additional acid to the Chicago marketplace is:

New Earnings = (Profit/Lb.) x (Production)

Selling Price = $27/sol ton 20° Be'		= $4.293/cwt (100% HCl)
Delivered Cost:		
Incremental Cost		= $2.917/cwt
Less By-Product Credit		= 1.350/cwt
		$1.567/cwt
Freight*		
Freight to Chicago (T/C)	= $5.29/sol. ton 20° Be'	
Terminal Charge	= 0.92/sol. ton 20° Be'	
Freight to Customer from Terminal (T/T)	= 2.85/sol. ton 20° Be'	
Total	$9.06/sol. ton 20° Be'	= $1.440/cwt
SARE (2.5% os sales price)**		= 0.107/cwt

* Source: E. M. Potter

Finance Charge (4.4%/Yr. of remaining net investment)**	= $0.208/cwt
Total Delivered Cost	= $3.322/cwt
Profit (sales price - delivered cost)	= $0.971/cwt
Estimated New Earnings at 15.9 M lbs/year	= $154,389/Year

** Source: S. H. Hinds

DSW 299049

V. ESTIMATED RETURN ON INVESTMENT (Continued)

The estimated return on the net capital investment based only on new earnings is:

Net Capital Investment	= $750,000
ROI before taxes	= 20.58%
ROI after taxes at 50%	= 10.29%

By 1973 the HCl being sewered will have to be neutralized as noted earlier. To neutralize the above would cost:

Lbs. of $CaCO_3$ required to neutralize 15.9 M lbs/yr.	= $\frac{\text{Mol. Wt. } CaCO_3}{2 \times \text{Mo. Wt. HCl}}$ x lbs HCl
	= 21.82 M lbs/Yr.
Neutralization raw material cost at $0.003/lb $CaCO_3$	= $65,460/Year

The return on the net capital investment based on new earnings and neutralization raw material cost savings is:

New Earnings + Neutralization Raw Material Cost Savings	= $219,849/Year
Net Capital Investment	= 750,000
ROI before taxes	= 29.31%
ROI after taxes at 50%	= 14.66%

VI. CONCLUSIONS AND RECOMMENDATIONS

1. The estimated return on net investment appears to justify the proposed adiabatic absorption project.

2. The success of the project depends on the quality of the acid. Therefore, pilot plant tests are justified.

DSW 299050

STLCOPCB4068962

VI. CONCLUSIONS AND RECOMMENDATIONS (Continued)

3. Approval for pilot plant test is recommended.

4. Proceed with project depending on pilot plant results.

Bill
W. C. Schrichte
Technical Services Department

/tm
Appendices Attached

DSW 299051

STLCOPCB4068963

APPENDIX A

DEPT. 233 - PRODUCTION REQUIREMENT (M LBS/YR)*

Product	1971	1972	1973	1974	1975
MCB	116144	116889	125218	132814	137506
DCB	16506	16811	16858	17153	17335

DEPT. 233 - THEORETICAL HCl GENERATION (M LBS/YR)

	1971	1972	1973	1974	1975
From MCB	37631	37872	40571	43032	44552
From DCB	8187	8338	8362	8508	9094
TOTAL	45818	46210	48933	51540	53646

HCl Generation Factors: 0.324 Lbs HCl/Lb MCB

0.493 Lbs HCl/Lb DCB

* Source - A. Nagel - Org. Div. 5 Yr. Production Plan (1/4/71)

DSW 299052

APPENDIX A
(Continued)

DEPT. 246 - PRODUCTION REQUIREMENT (M LBS/YR)*

Product	1971	1972	1973	1974	1975
1221	2289	2880	3357	3450	3566
1242	40304	39945	41570	43411	45194
1254	8373	8373	8038	8830	8995
1260	2672	2557	2557	2542	2527

DEPT. 246 - THEORETICAL HCl GENERATION (M LBS/YR)

	1971	1972	1973	1974	1975
From 1221	494	622	725	745	770
From 1242	18137	17975	18707	19535	20337
From 1254	4915	4915	4718	5183	5280
From 1260	1747	1672	1672	1662	1653
TOTAL	25293	25184	25822	27125	28040

HCl Generation Factors: 0.216 Lbs Hcl/Lb 1221
0.450 Lbs HCl/Lb 1242
0.587 Lbs HCl/Lb 1254
0.654 Lbs HCl/Lb 1260

* Source: Manufacturing Manager of Functional Fluids (1/18/71)

DSW 299053

STLCOPCB4068965

APPENDIX A
(Continued)

DEPT. 248 - PRODUCTION REQUIREMENTS (M LBS/YR)*

Product	1971	1972	1973	1974	1975
S-140	12902	9657	9984	10637	11027
CDP	3385	3000	3000	3000	3000
TPP	2851	3661	3908	4164	4522
TCP	8411	6946	7006	7079	7075

DEPT. 248 - THEORETICAL HCl GENERATION (M LBS/YR)

	1971	1972	1973	1974	1975
From S-140	4147	3104	3209	3419	3544
From CDP	1088	964	964	964	964
From TPP	956	1227	1310	1396	1516
From TCP	2497	2062	2080	2102	2101
TOTAL	8688	7375	7553	7881	8125

HCl Generation Factors: 0.3214 Lbs HCl/Lb S-140 or CDP
0.3352 Lbs HCl/Lb TPP
0.2969 Lbs HCl/Lb TCP

* Source: A. Nagel - Org. Div. 5 Yr. Production Plan (1/4/71)

DSW 299054

STLCOPCB4068966

APPENDIX A
(Continued)

DEPT. 236-7 - PRODUCTION REQUIREMENTS (M LBS/YR)*

Product	1971	1972	1973	1974	1975
Ortho	6	5	5	0	0
Para	4232	4424	4572	4737	4910
Refined 2,4-DCP	500	525	550	575	600
Molten Penta	23286	22396	23542	25875	28360
Penta 60	325	425	500	550	550

DEPT. 236-7 - THEORETICAL HCl GENERATION (M LBS/YR)

	1971	1972	1973	1974	1975
From Ortho	2	1	1	0	0
From Para	1202	1256	1298	1345	1394
From Refined 2,4 DCP	224	235	246	257	268
From Molten Penta	15951	15341	16126	17724	19427
From Penta 60	216	282	332	365	365
TOTAL	17593	17115	18003	19691	21454

HCl Generation Factors:
- 0.284 Lbs HCl/Lb Ortho or Para
- 0.447 Lbs HCl/Lb Refined 2,4 DCP
- 0.685 Lbs HCl/Lb Molten Penta
- 0.664 Lbs HCl/Lb Penta 60

* Source: A. Nagel - Org. Div. 5 Yr. Production Plan (1/4/71)

DSW 299055

STLCOPCB4068967

APPENDIX B

THEORETICAL HCl GENERATED (M LBS/YR)
AT WGK BASED ON PRODUCTION REQUIREMENTS

DEPT.	1972	1972	1973	1974	1975
233	45818	46210	48933	51540	53646
246	25293	25184	25822	27125	28040
236-7	17593	17115	18003	19691	21454
248	8688	7375	7553	7881	8125
TOTAL	97392	95884	100311	106237	111265

ESTIMATED HCl RECOVERABLE (M LBS/YR)

DEPT.	% RECOVERY	1971	1972	1973	1974	1975
233	85	38945	39279	41593	43809	45599
246	85	21499	21406	21949	23056	23834
236-7	80	14074	13692	14402	15753	17163
248*	64	5560	4720	4834	5044	5200
	TOTAL	80078	79097	82778	87662	91796

* 20% of HCl generated per batch comes off under vacuum and is not available for recovery. Thus, 80% recovery of 80% available is equivalent to 64% recovery.

DSW 299056

STLCOPCB4068968

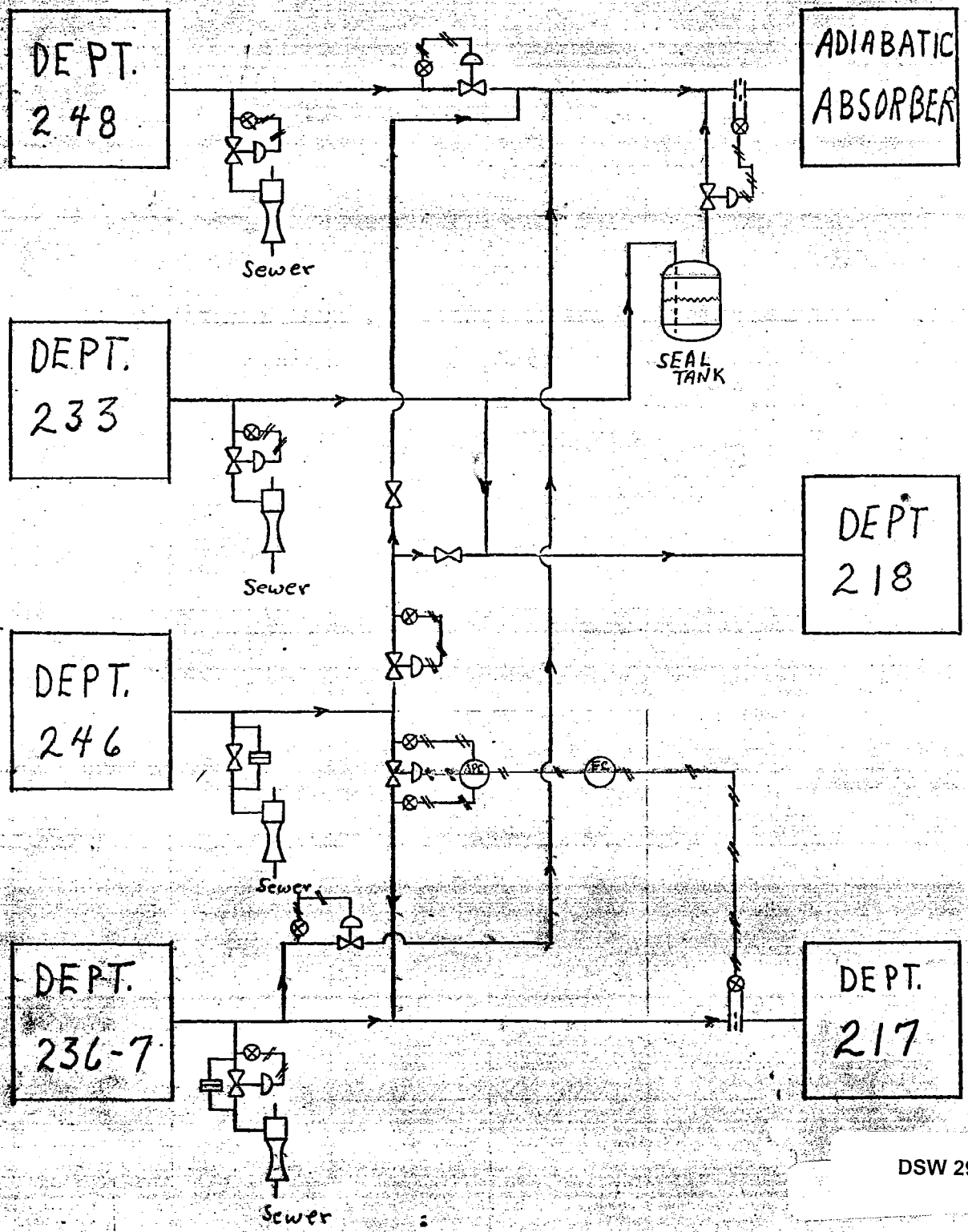

DSW 299057

HCl DISTRIBUTION WITH ADIABATIC ABSORPTION

By Bill Schuster

STLCOPCB4068969

APPENDIX D

ESTIMATED MURIATIC ACID PRODUCTION WITH ADIABATIC ABSORPTION (M LBS/YR.)*

HCl required for Chlorosulfonic Acid (Dept. 217):*

	1971	1972	1973	1974	1975
From Dept. 246	12903	13341	11319	10863	10385
From Dept. 236-7	10578	10224	10770	11837	12951
TOTAL	23481	23565	22089	22700	23336

HCl recovered as muriatic acid in the falling film absorption unit (Department 218):

	1971	1972	1973	1974	1975
From Dept. 233	31451	31620	33482	35266	36707
TOTAL	31451	31620	33482	35266	36707

HCl recovered as muriatic acid in the proposed adiabatic absorption unit:

	1971	1972	1973	1974	1975
From Dept. 233	7594	7659	8111	8543	8892
From Dept. 246	8596	8065	10630	12193	13449
From Dept. 236-7	3496	3468	3632	3916	4212
From Dept. 248	5560	4720	4834	5044	5200
TOTAL	25146	23912	27207	29696	31753

* The HCl gas splits are based on average HCl flows from the generating departments and to the using departments. The distribution of the HCl is estimated with adiabatic absorption facilities included. The above splits do not reflect the existing HCl distribution system.

** Based on Inorganic Sales Forecast and Queeny Plant's requirements. HCl usage of 0.326.

DSW 299058

Monsanto

CENTRAL ENGINEERING DEPARTMENT

EQUIPMENT INFORMATION SUMMARY

PREPARED BY	CEA NO.	AREA	PAGE OF
APPROVED BY	INITIAL ISSUE	REV. NO.	REV. ISSUED

PROJECT NAME: Adiabatic Absorption of HCl at WGK (Evaluation)

EQUIPMENT NUMBER	QTY.	EQUIPMENT NAME	EQUIPMENT DESCRIPTION: SIZE, RATING, MODEL, ETC.	MATERIAL OF CONSTRUCTION	REMARKS	SOURCE*	ESTIMATED PRICE ($)
Haveg Package	1	Adiabatic Absorber	Design HCl Feed Rate of 9500 #/Hr.	Haveg 41	Haveg 41 Adia. Abs. w/Strpg.Act.	N	
	1	Bayonet Heater	Sized to corres. to above des. rate	Impervious Graphite	Incl. in the Adia. Abs. Pkg.	N	
	1	Jet Condenser	"	Haveg 41	"	N	
	1	Acid Cooler	"	Impervious Graphite Tubes	"	N	
	1	Lot of Process Instrumentation	"		"	N	
	1	Lot of Interconnecting Piping	"		"	N	
							$38,000
Pumps	1	Carbon Tower Feed Pmp.	Durco 2 x 2 P-10	Durcon Epoxy	10" Impeller	N	
		Motor	10 HP		1750 RPM/TEFC	N	
	1	Circulating Pump	Durco 2 x 2 P-10	Durcon Epoxy	10" Impeller	N	
		Motor	10 HP		1750 RPM/TEFC	N	
	1	Installed Spare	Durco 2 x 2 P-10	Durcon Epoxy	10" Impeller	N	
		Motor	10 HP		1750 RPM/TEFC	N	
	1	Loading Pump	Durco ~400 gpm at (3 x 3)	Durcon	10" Impeller	N	
		Motor	10 HP		1750 RPM/TEFC	N	
	1	Process Water Pump	~100 gpm (3 x 2)	Carbon Steel		N	
		Motor	10 HP		1750 RPM/TEFC	N	

DSW 299059

CE-224 (REV. 9-70)

*SOURCE: N - NEW E - EXISTING R - TO BE RELOCATED

STLCOPCB406897

APPENDIX E (Pg. 23)

Monsanto

CENTRAL ENGINEERING DEPARTMENT

EQUIPMENT INFORMATION SUMMARY

PREPARED BY	CEA NO.	AREA	PAGE OF
APPROVED BY	INITIAL ISSUE	REV. NO.	REV. ISSUED

PROJECT NAME: Adiabatic Absorption of HCl at WGK (Evaluation)

EQUIPMENT NUMBER	QTY.	EQUIPMENT NAME	EQUIPMENT DESCRIPTION: SIZE, RATING, MODEL, ETC.	MATERIAL OF CONSTRUCTION	REMARKS	SOURCE*	ESTIMATED PRICE ($)
Tanks	1	233 Seal Tank	500 gal. cap. 48" OD x 63" Str. Side	Carbon Steel		N	
	1	Carbon Charging Tank	2000 gal. cap. 78" OD x 93" Str. Side	Rubber Lined Steel Prot. Coatg. on Outside	Allow. Wk. Pressure 35 psi	N	
	2	Receiver Tank	30,000 gal. cap. 13' x 30' Str. Side	"	Vent Line tied into Tail Gas Drowning Jet	N	
	2	Ion Exchanger	3' dia. x 8' Hgt.	"	Plastic Internals	N	
	2	Filter (Final)	200 gpm	Rubber Lined Stl.	Cartridge Type	N	
	1	Water Softener Unit	100 gpm	Carbon Steel	Fixed Bed Ion Exchanger Type	N	
	2	Carbon Towers	5' OD x 23" Str. Side w/Dished Head & Conical Bottom (5' Hgt)	Haveg 41/ Polyester	Per Design in Pittsburgh Carbon Design Handbook	N	
	1	248 HCl Booster Blwr.	Sized to Boost gas pressure in distribution line to 5 to 10 psi	Carbon Steel (?)	Nash Pump or Cycloidal Blower Type	N	
	1	Tote Tilt System		Carbon Steel	System to Replace Existing System and Include Conveyor	N	

DSW 299060

CE-224 (REV. 9-70)

*SOURCE: N - NEW E - EXISTING R - TO BE RELOCATED

STLCOPCB406897 2

APPENDIX E (Pg. 24)

APPENDIX E

INSTRUMENTATION:

1. Two back pressure controllers and valves to control the flow of HCl from Depts. 236-7 and 248.

2. A flow recorder controller with an orifice (accurate at 2500 #/hour flow) to control Dept. 233 HCl flow. Dept. 233's HCl off-gas would only be used to maintain a minimum of 2500 #/hr flow to the adiabatic absorber.

3. A ratio controller to ratio the water to the HCl feed when the HCl feed rate changed abruptly up or down (e.g. Dept. 236-7 or Dept. 248 in that portion of cycle when HCl is not generated or start generating again). This controller would over-ride the temperature control instrumentation provided by Haveg.

4. A multi-point recorder and indicator capable of reading temperature (8 points) and pressure (3 points) throughout the absorber separately.

5. A high temperature alarm in line after acid cooler.

6. A level recorder controller in the sump of the absorber and control valve to maintain level in the sump.

7. Two delta pressure indicators across the carbon towers.

8. Level indicators for each (2) receiver tank.

9. A density indicator in line bypassing the carbon tower discharge line to the receivers. Also one in the recirculating line (Dynatrol). These would be used to indicate acid strength.

10. A flow totalizer in the process water line to the receiver tank for diluting the acid.

11. A level indicator for the bulk acid storage tank.

12. High level cut-offs (conductance probe type) for six loading spots. These should be light weight so the operator can clamp them to the dome of the tank car or truck and should also be mounted inside a tube.

13. Safety shower alarms (approximately 2).

DSW 299061

STLCOPCB4068973

APPENDIX E - Continued

FOUNDATIONS:

1. A slab (approximately 15' x 16') with curb and drain for ground level of operating structure. A slab on the above slab for the base of the absorber (approx. 4' x 4'). Also on the above slab, two footings for the supports of the acid cooler. All of the above to be lined with acid proof brick.

2. Foundations for the two receiver tanks.

3. Slabs for the ion exchangers and the final filters. These to be epoxy coated.

4. Slab for the HCl booster blower in Dept. 248.

5. Modifications to existing slab for water softener unit (new).

STRUCTURAL:

1. Steel work to bring the existing structure up to four levels. The loading on the uprights and cross members will be the carbon towers fully loaded (wt. of towers + 9000# of carbon each) and the adiabatic absorber's lateral load. Stairs for the four levels will be required.

2. A walkway extending from the operating structure across the top of the two receiver tanks with a ladder extending to the ground.

3. Modifications to the existing structure for the water softener unit.

(All structural steel and grating to be epoxy coated for protection from acid.)

PIPING:

HCl Distribution Piping:

1. 400' of 6" steel pipe from Dept. 248 along existing pipe bridge to SE corner of Bldg. CT.

2. 950' of 6" steel pipe from SE corner of Bldg. CT across top of building, across existing bridge to power house, around and over power house (same route as Dept. 246 line), across existing bridge from power house (West side), to and across existing bridge, heading South out of Dept. 236-7 to the adiabatic absorber.

STLCOPCB4068974

APPENDIX E - CONTINUED

PIPING:

HCl Distribution Piping (Cont'd):

3. 175' of 6" steel pipe from tie-in to Dept. 236-7 distribution line across existing bridge to the adiabatic absorber.

4. 100' of 6" steel pipe for alterations to Dept. 246 & 233 lines for feed to the adiabatic absorber.

Process Area Piping:

1. 50' of 1" polypropylene lined steel pipe.

2. 200' of 2" polypropylene lined steel pipe.

3. 800' of 3" polypropylene lined steel pipe.

4. 350' of 4" polypropylene lined steel pipe.

City Water Piping:

1. 100' of 1-1/2" steel underground pipe for safety showers in operating area.

2. Approximately 50' of 2" steel pipe for alterations at water softener unit.

Process Water Piping:

1. 250' of 2" steel pipe traced and insulated (acid proof).

Steam Supply Piping:

1. 100' of 1-1/2" steel pipe traced and insulated (acid proof).

Well Water Piping:

1. 50' of 1-1/2" steel pipe traced and insulated (acid proof). To be used with drowning jet.

Cooling Tower Water Piping:

1. 80' of 3" steel pipe from header to acid cooler and return.

Tail Gas Piping:

1. 60' of 6" polyester pipe lined with polypropylene.

Drains and Sewers:

1. 25' of sewer piping from floor of operating area to sewer box at NW corner of structure.

STLCOPCB4068975

APPENDIX E - CONTINUED

ELECTRICAL:

1. 400' of cable from panel at N_3 corner of Falling Springs Road and 3rd Street to operating area to supply power for pump motors, lighting and instruments, etc. Main disconnect and push button starters in operating area.

PILINGS:

1. Pilings for each of the receiver tanks.

2. Soil samples - receiver tanks area.

DSW 299064

STLCOPCB4068976

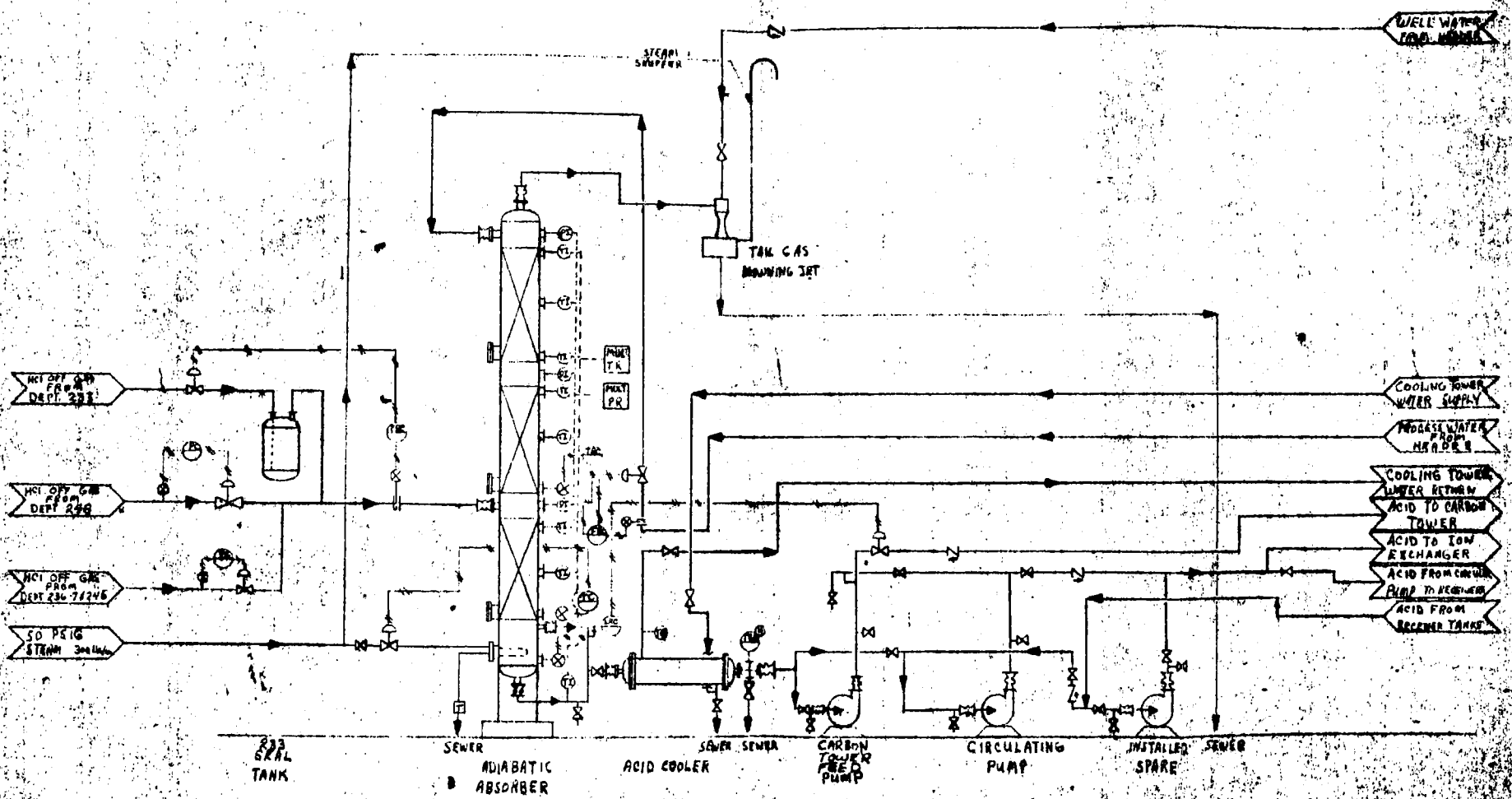

DSW 299065

STLCOPCB4068977

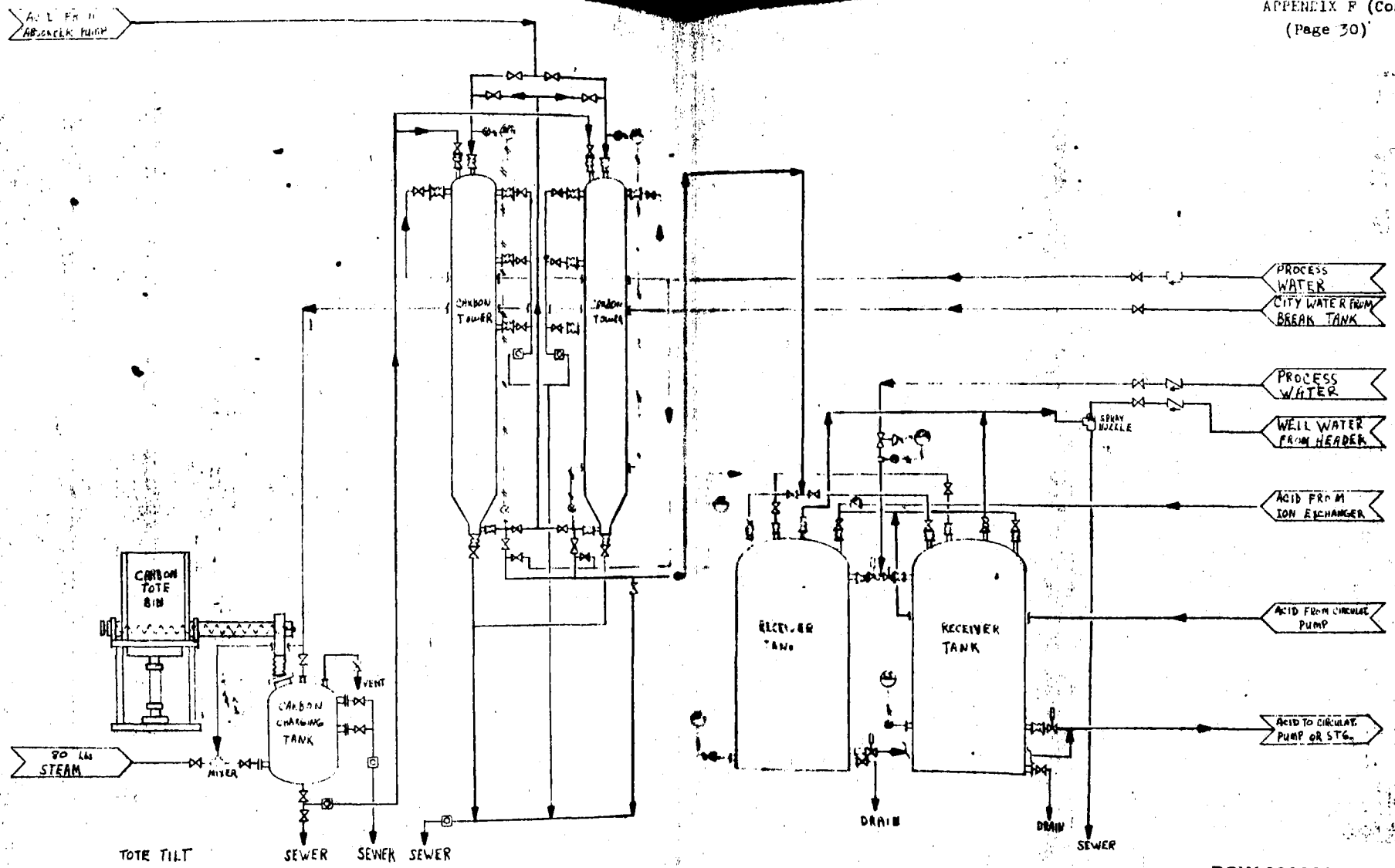

DSW 299066

By Bill Schnacke

STLCOPCB4068978

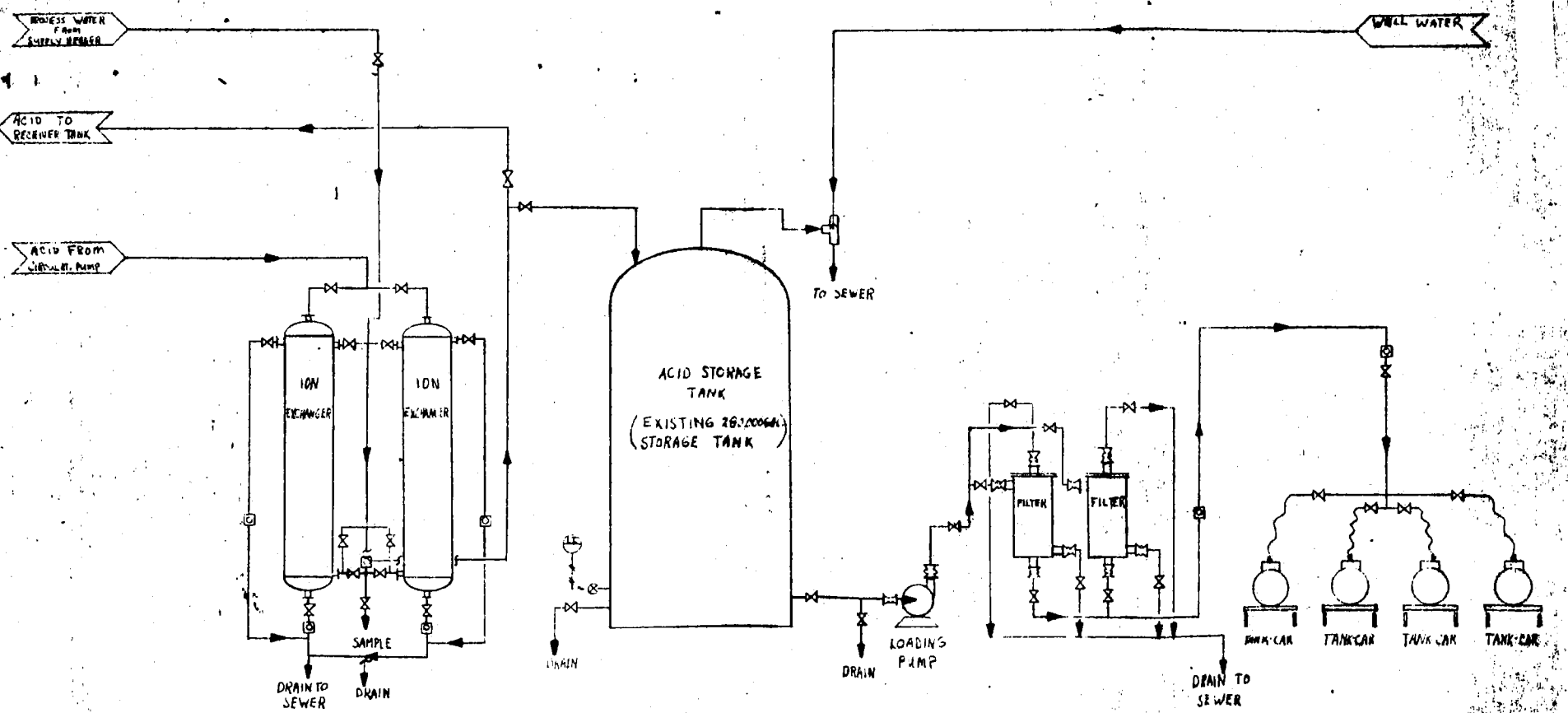

By Bill Schrahte

DSW 299067

STLCOPCB4068979

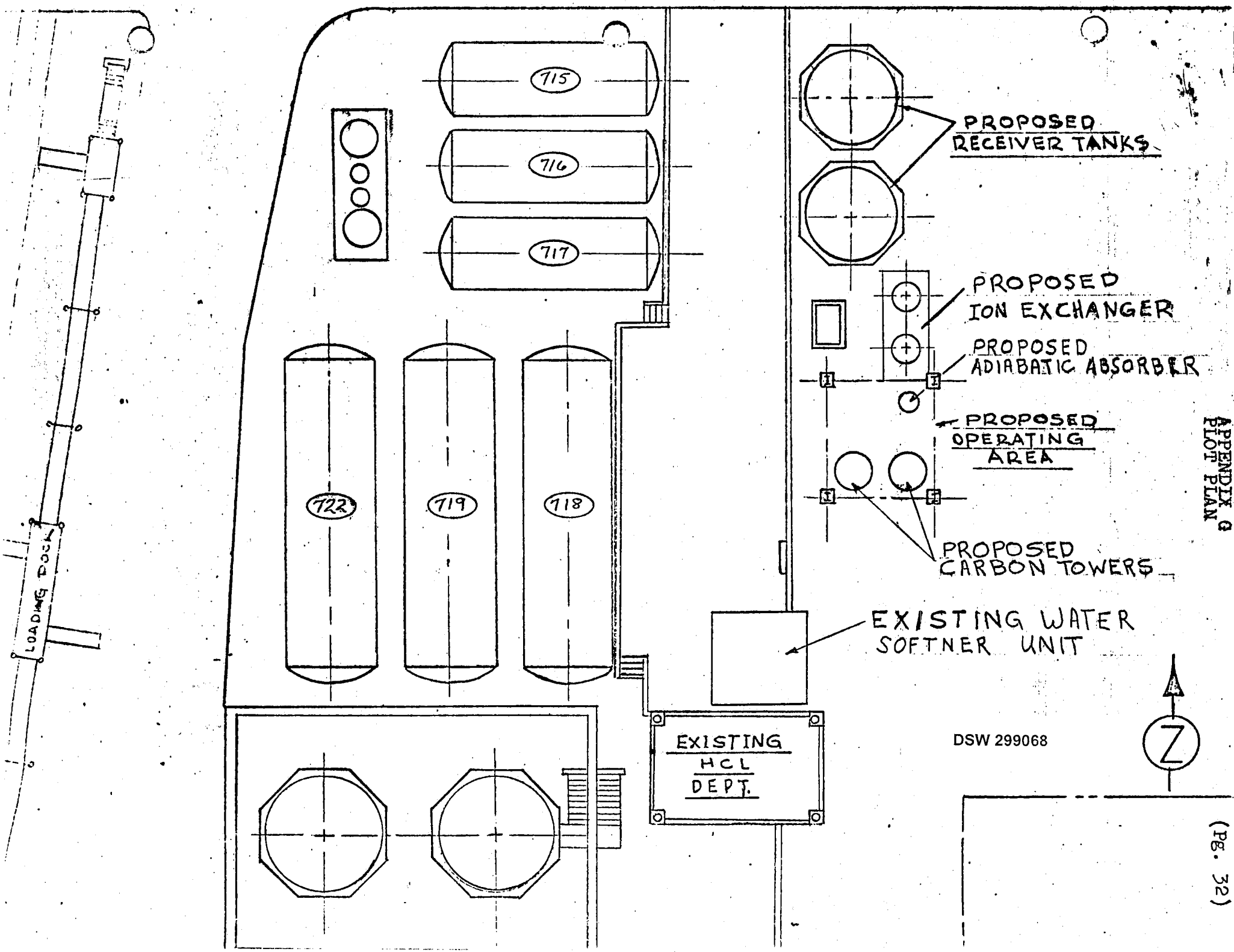

APPENDIX G
PLOT PLAN

(Pg. 32)

STLCOPCB4068980

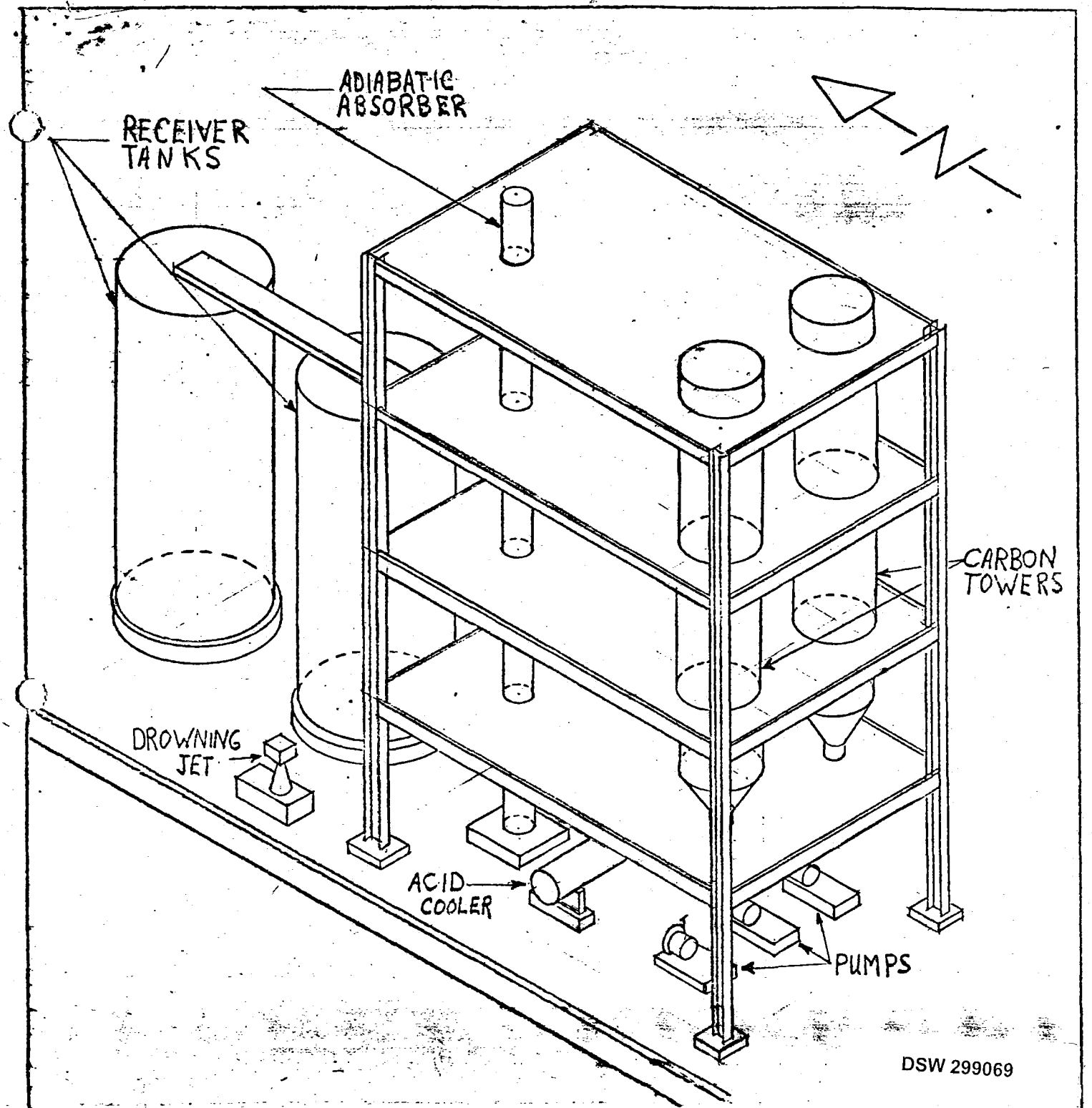

MONSANTO COMPANY

ORGANIC CHEMICALS DIVISION
MONSANTO, ILLINOIS

THIS DRAWING AND THE INFORMATION CONTAINED HEREON, IS CONFIDENTIAL AND IS THE PROPERTY OF MONSANTO COMPANY. IT IS LOANED WITH THE EXPRESSED AGREEMENT THAT IT WILL NOT BE REPRODUCED, COPIED, OR OTHERWISE DISPOSED OF, DIRECTLY OR INDIRECTLY, AND WILL NOT BE USED, IN WHOLE OR IN PART, TO FURNISH ANY INFORMATION FOR THE MAKING OF APPARATUS OR THE PRACTICING OF ANY PROCESS OR OTHERWISE WITHOUT WRITTEN PERMISSION OF MONSANTO COMPANY FIRST OBTAINED AND SPECIFIC AS TO EACH CASE. THE ACCEPTANCE OF THIS DRAWING WILL BE CONSTRUED AS AN ACCEPTANCE OF THE FOREGOING PROVISION.

	BY	DATE		BY	DATE
DRAWN	B SCHRICHTE		APPD.		
CKD.			APPD.		
DSGN. APPD.			APPD.		

TITLE: ADIABATIC ABSORPTION LAYOUT

SCALE	JOB NO.	EST. NO.

DEPT. No.	IDENTITY	DRAWING NUMBER	REV.
		TS-A-	

STLCOPCB4068981

APPENDIX H

MANUFACTURING COST ESTIMATES

BASED ON 1971 DISTRIBUTION IN APPENDIX G

Facility		Falling Film		Adiabatic		Falling Film + Adiabatic	
Monthly Production		2,630,000		2,100,000		4,730,000	
Product Cost		Unit	Amount	Unit	Amount	Unit	Amount
Raw Material	(V)	1.722	45289	1.571	32991	1.655	78280
Steam	(V)	-	-	0.005	109	0.002	109
Electricity	(F)	0.016	411	0.020	411	0.017	822
Water Purchased	(V)	0.005	135	0.005	148	0.005	283
Water Plant	(F)	0.045	1189	0.028	595	0.038	1784
Labor Mfg.	(F)	0.110	2889	0.138	2889	0.122	5778
Salaries	(B)	0.024	624	0.030	624	0.026	1247
Payroll OH	(F)	0.030	792	0.037	792	0.033	1584
Supplies	(F)	0.007	188	0.009	188	0.008	376
Laboratory	(V)	0.062	1624	0.062	1302	0.062	2926
Cloth & Laundry	(F)	0.001	34	0.002	34	0.001	68
Cloth & Lndry Sfty.	(F)	0.001	18	0.001	18	0.001	36
Tech. Services	(F)	0.056	1480	0.070	1480	0.063	2960
Research	(F)	-	-	0.024	500	0.011	500
Mechanical Exp.	(B)	0.178	4680	0.195	4100	0.186	8780
Total Direct Conv.		0.535	14064	0.628	13190	0.576	27253
Depreciation	(B)	0.176	4638	0.298	6250	0.230	10888
Factory Indir. Exp.	(B)	0.182	4794	0.228	4794	0.203	9588
Total Indirect Conv.		0.358	9432	0.526	11044	0.433	20476
Total Product Cost		2.615	68785	2.725	57225	2.664	126009
Total F & B Cost		0.827	21737	1.080	22675	0.939	44411
Total Variable Cost		1.788	47048	1.643	34550	1.725	81598

DSW 299070

STLCOPCB4068982

APPENDIX I

INCREMENT COST FOR ADDITION PRODUCTION

Facility		Existing (1971 Std.)		Existing + New		Incremental Increase	
Monthly Production		3,400,000		4,730,000		1,330,000	
Product Cost		Unit	Amount	Unit	Amount	Unit	Amount
Raw Material	(V)	1.722	58548	1.655	78280	-	19732
Steam	(V)	-	-	0.002	109	-	109
Electricity	(F)	0.012	411	0.017	822	-	411
Water Purchased	(V)	0.005	174	0.005	283	-	109
Water Plant	(F)	0.035	1189	0.038	1784	-	595
Labor Mfg.	(F)	0.140	4783	0.122	5778	-	995
Salaries	(B)	0.037	1247	0.026	1247	-	0
Payroll OH	(F)	0.040	1351	0.033	1584	-	232
Supplies	(F)	0.007	250	0.008	376	-	126
Laboratory	(V)	0.062	2100	0.062	2926	-	826
Cloth. & Laundry	(F)	0.002	55	0.001	68	-	13
Cloth. & Lndry Sfty.	(F)	0.001	30	0.001	36	-	6
Tech. Services	(F)	0.087	2960	0.063	2960	-	0
Research	(F)	-	-	0.011	500	-	500
Mechanical Exp.	(B)	0.138	4680	0.186	8780	-	4100
Total Direct Conv.		0.566	19230	0.576	27253	-	8022
Depreciation	(B)	0.136	4638	0.230	10888	-	6250
Factory Indir. Exp.	(B)	0.141	4794	0.203	9588	-	4794
Total Indir. Conv.		0.277	9432	0.433	20476	-	11044
Total Product Cost		2.565	89210	2.664	126009	2.917	38798
Total F & B Cost		0.776	26388	0.939	44411	-	18023
Total Variable Cost		1.789	60822	1.725	81598	-	20776

DSW 299071

STLCOPCB4068983