Alberta Darkley
Research Library
St. Louis

7/18/50

MONSANTO
CHEMICALS—PLASTICS

THE BULK TANK STORAGE OF PLASTICIZERS

Monsanto Technical Bulletin No. 0–69 June 1, 1950
Monsanto Chemical Company, Organic Chemicals Division, St. Louis, Mo.

THE BULK TANK STORAGE OF PLASTICIZERS
Monsanto Technical Bulletin No. 0–69
June 1, 1950

The purchase of plasticizers in bulk tank car quantities is becoming increasingly common for it frequently offers the possibility of effecting attractive economies and operating advantages. There are, however, certain requirements associated with the handling and storage of large volumes in bulk that should be given thorough consideration.

This bulletin briefly outlines a generally applicable system for the bulk tank storage of plasticizers. Included are drawings of typical equipment types and arrangements, and data on pertinent properties of various Monsanto plasticizers. Adaptations of the system may be made to meet the particular storage requirements of specific installations. The Monsanto technical staff is available for consultation and further detailed information.

The information contained in this bulletin is, to our best knowledge, true and accurate, but all recommendations or suggestions are made without guarantee, since the conditions of use are beyond our control. The Monsanto Chemical Company disclaims any liability incurred in connection with the use of these data or suggestions.

Furthermore, nothing contained herein shall be construed as a recommendation to use any product in conflict with existing patents covering any material or its use.

0615008

TOWOLDMON0039087

TABLE of CONTENTS

	Page
MATERIALS OF CONSTRUCTION	2
STORAGE TANKS	2
PIPE LINES	2
PUMPS AND FILTERS	3
TANK CAR UNLOADING	3
PREPARING EMPTY CAR FOR RETURN	3
SAFETY PRECAUTIONS	4
DRAWINGS	
Vertical Storage Tank (Fig. 1)	5
Typical Run of Steam Traced Pipe (Fig. 2)	6
Flow Diagram From Tank Car To Storage Tank (Fig. 3)	7
Storage Tank With Ladders and Platform (Fig. 4)	8
DATA ON MONSANTO PLASTICIZERS	
Specific Gravity, Crystallizing Point, Flash Point	9
Viscosity Curves Phthalate Plasticizers (Fig. 5)	10
Viscosity Curves Phthalyl Glycollate Plasticizers (Fig. 6)	11
Viscosity Curves Phosphate Plasticizers (Fig. 7)	12

0615009

TOWOLDMON0039088

MATERIALS OF CONSTRUCTION

In general plasticizers present no great corrosion problem in their storage or handling. All of the standard materials of construction such as common steels, stainless steels, Monel and nickel can be used without difficulty. Common steel is usually recommended for new units however, because of its lower cost. The other materials find use principally when existing equipment is converted from other services.

STORAGE TANKS

A. Construction

Figure 1 shows the construction of a typical steel storage tank.

Those recommended are vertical steel units of 15,000–23,000 gallon capacity. The top is fitted with a 24 inch flanged manhole for inspection purposes, four 2 inch flanged nozzles and one 6 inch nozzle. One 2 inch nozzle is fitted with a 2 inch iron pipe goose-neck for vent purposes and another is used as a charging inlet. The other pair of 2 inch and the 6 inch remain as spares.

There is in addition a 2 inch flanged nozzle located at approximately one-half the height in the side sheet with a 2 inch pipe extending through it to the bottom for unloading purposes.

The unit is heated when necessary by external steam coils. The coils consist of ½ inch to 1½ inch steel pipe installed in two sections. One section is made in approximately 18 inch spirals placed directly against the bottom. The other is wrapped on 18 inch centers over about the lower third of the unit. The coil area is then shielded and insulated as shown in Figure 1. Steam pressure on the coils should be of the order of 60–110 pounds.

The tanks are equipped with a vertical ladder and guard, ascending adjacent to the outlet nozzle and a working platform with adequate guard rails is installed on the top of the unit (see Figure 4). Additional devices such as liquid level gauges and temperature regulators may be added where desirable.

B. Preparation For Use

The initial cleaning of steel storage units normally presents somewhat of a problem. Sandblasting of the inside is usually the first step to assure clean and smooth surfaces. When completed the sand is removed and the tank swabbed or mopped with the plasticizer to be stored. This should be done as promptly as possible after sandblasting to prevent re-rusting, particularly under conditions of high humidity. After mopping which removes most of the dirt, a few hundred pounds of the plasticizer is charged to the tank to complete the cleaning. By means of a pump, temporary filter and hose, the plasticizer is pumped from the tank through the filter and sprayed through the manhole down the walls of the tank. This is continued until all of the dirt is removed.

Sandblasting may be omitted if the unit is essentially free of rust though the other steps should followed as given.

PIPE LINES

Recommended piping throughout the system is 2 inch flanged steel. Garlock No. 900 or similar material is suitable for gaskets.

0615010

TOWOLDMON0039089

Heating of the lines when necessary is accomplished by tracing with a 3/8 inch or ½ inch paralleled steam line carrying 100 pound steam.

Steel, plug type valves are used throughout the system.

PUMPS AND FILTERS

Self-priming, steel or bronze lined centrifugal pumps are recommended. The location and installation should be such that both the unloading of tank cars to storage and subsequent transfer of product from storage can be accomplished with the same pump. Valves should be located on both sides of the pump to provide shut-offs necessary during repairs or repacking of the pump. Asbestos type packings have proven satisfactory in most instances.

It is recommended that a cartridge type filter be installed on the suction side of the pump to remove extraneous matter and dirt. It is difficult to prevent contamination of the product by air-borne particles or tank car rust. A filter as suggested is usually effective however, in removing such from the product. A diagrammatic piping arrangement is suggested in Figure 3.

TANK CAR UNLOADING

It is recommended that tank cars be unloaded by pumping out through a standpipe placed through the dome opening. This is preferred to bottom unloading because of the lesser possibility of product loss by leakage. Air pressure is not recommended for unloading because of the possibility of car rupture or loss of product by pipe failure.

Care should be exercised to prevent entry of moisture or other foreign matter into the car. The dome opening should be protected when the car is opened for sampling, final unloading or at any other time.

The following unloading procedure is recommended:

1. Spot the car, set brakes and block the wheels.
2. Open car vent pipe and check to insure that there is no blockage of the line.
3. Provide a protective covering and then open the dome cover.
4. Place a 2 inch standpipe in the car and connect to the suction side of the unloading pump.
5. Line up the valves to direct the product to the intended receiver and pump out contents of car.
6. When car is empty, stop the pump, close all valves necessary and disconnect and remove standpipe.

In very cold weather it may be necessary to warm the car contents before unloading. In such instances (following step 3 above) steam of 30–100 pounds pressure is connected to the heating coils of the car. Steam is held on the coils until the contents are heated to 30°C. The remainder of the above procedure is then followed.

PREPARING EMPTY CAR FOR RETURN

After the standpipe has been removed, close the dome cover and all other connections securely.

If the heating coils were used, all steam condensate must be removed. To do this the coils are drained and then blown dry with compressed air.

0615011

TOWOLDMON0039090

Do not permit water or other foreign matter to enter the car.

SAFETY PRECAUTIONS

Handling of plasticizers generally presents no serious safety hazards. Plasticizers are in general of low toxicity and do not give off appreciable vapors at temperatures ordinarily encountered in handling. However, before entering a tank which has contained a plasticizer it is advisable to to blow clean compressed air into the unit for a few hours. Entry can then be made wearing an air helmet as an added precaution.

Although flash points of plasticizers are rather high, open flames should be kept away from and out of storage units or tank cars. If welding for example must be done in a unit, boil out with water containing about 1% caustic soda, flush out and reboil with clear water. Air out the unit as above and check the safety of the atmosphere within the unit with an explosion meter before proceeding with welding.

Plasticizers splashed into the eyes may be somewhat irritating but no serious eye injuries have been reported. The standard FIRST AID treatment for such is immediate and copious washing with water for at least 5 minutes. If discomfort persists, a physician should be consulted. If gotten on the skin, plasticizers should be washed off using soap and water. They should not of course, be taken internally.

0615012

TOWOLDMON0039091

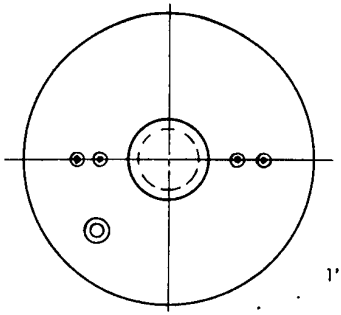

PLAN AT TOP

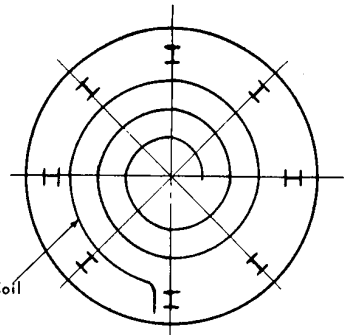

PLAN AT BOTTOM

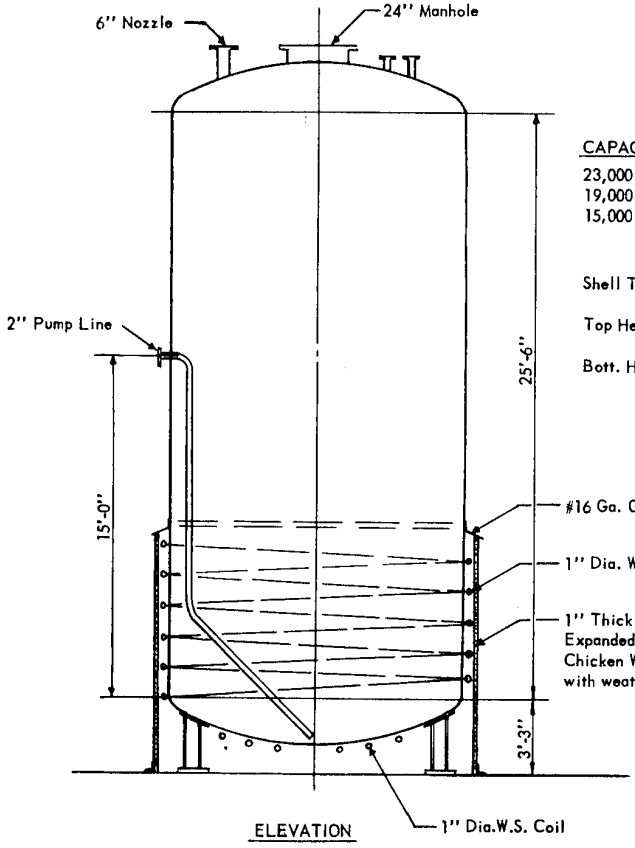

ELEVATION

CAPACITY	DIA.
23,000 Gals.	12'-0"
19,000 Gals.	11'-0"
15,000 Gals.	10'-0"

Shell Thickness 3/8"

Top Head 7/16"

Bott. Head 1/2"

Figure 1
VERTICAL STORAGE TANK

0615013

TOWOLDMON0039092

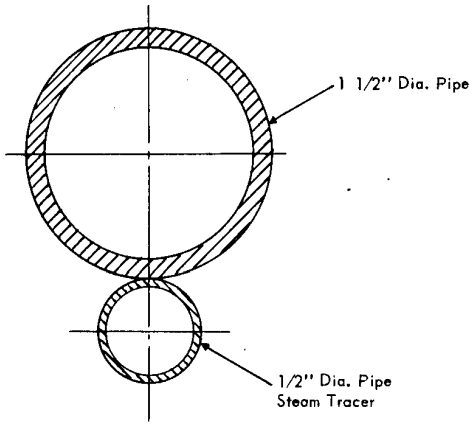

PIPE SECTION

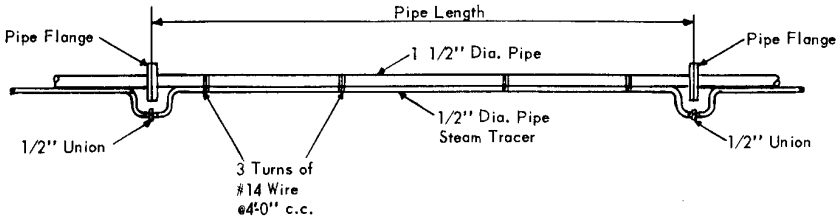

Figure 2
TYPICAL RUN OF STEAM TRACED PIPE

TOWOLDMON0039093

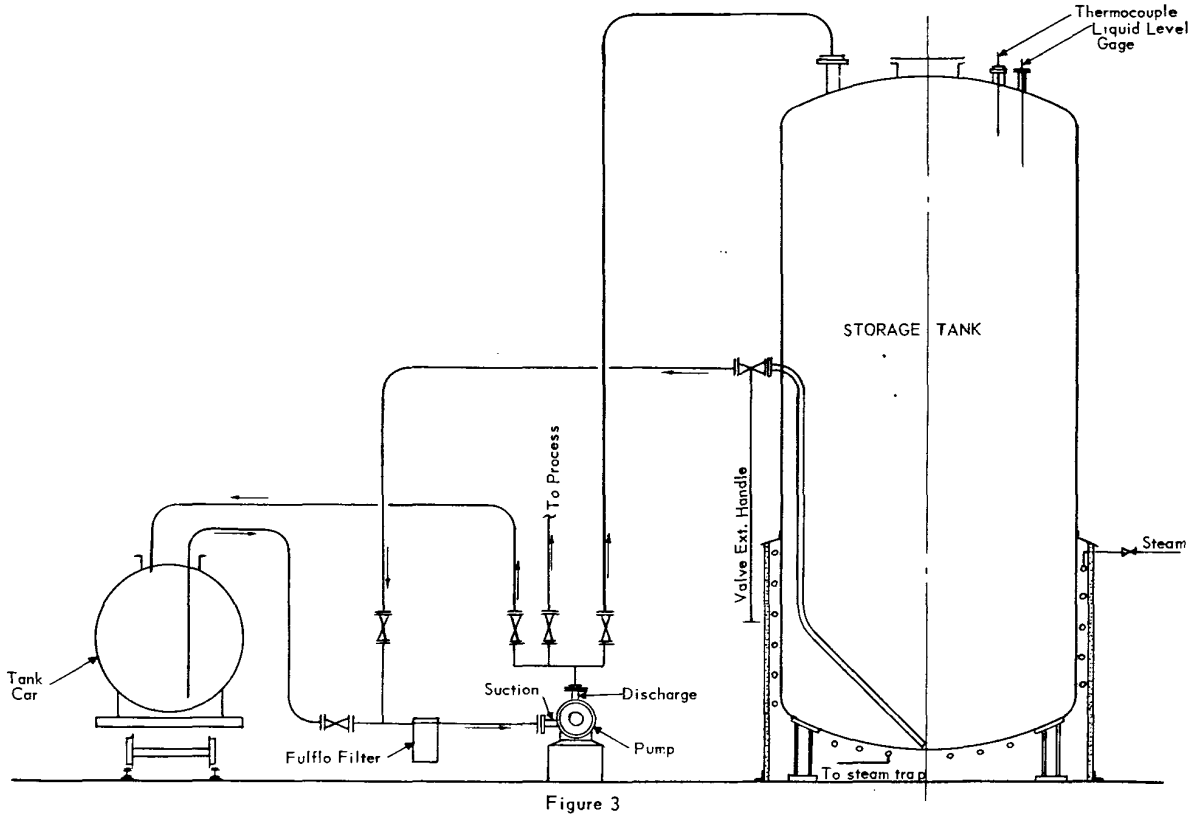

Figure 3

FLOW DIAGRAM FROM TANK CAR TO STORAGE TANK

C615C15

TOWOLDMON0039094

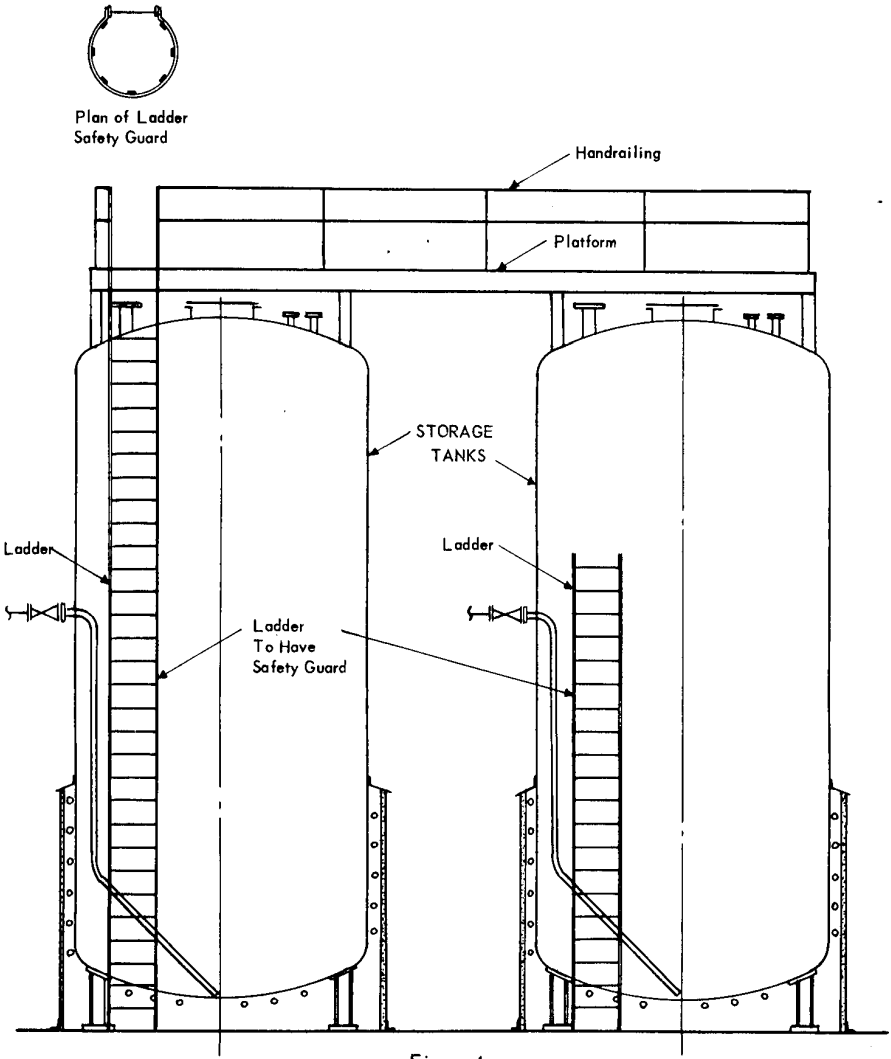

Figure 4

STORAGE TANK WITH LADDERS AND PLATFORM

0615016

TOWOLDMON0039095

DATA ON MONSANTO PLASTICIZERS

SPECIFIC GRAVITY – CRYSTALLIZING POINT – FLASH POINT

Plasticizer	Specific Gravity at 25°C.	Crystallizing Point	Flash Point
Tricresyl Phosphate	1.162	Less than (−35°C.)	470°F. (245°C.)
Dibutyl Phthalate	1.045	Less than (−35°C.)	340°F. (170°C.)
Diethyl Phthalate	1.120	Less than (−0.3°C.)[1]	305°F. (152°C.)
Dimethyl Phthalate	1.189	0°C.	300°F. (149°C.)
Santicizer* 107	0.983	−55°C. (Gel)	425°F. (218°C.)
Santicizer 140	1.208	Less than (−35°C.)	450°F. (232°C.)
Santicizer 141	1.090	−54°C. (Pour Point)	435°F. (224°C.)
Santicizer 160	1.116	Less than (−35°C.)	390°F. (199°C.)
Santicizer B-16	1.097	Less than (−35°C.)	390°F. (199°C.)
Santicizer E-15	1.180	20°C.[1]	386°F. (197°C.)
Santicizer M-17	1.220	Less than (−35°C.)	380°F. (193°C.)

[1] Supercools readily

* Reg. U. S. Pat. Off.

0615017

TOWOLDMON0039096

Figure 5

VISCOSITY CURVES PHTHALATE PLASTICIZERS

ASTM STANDARD VISCOSITY-TEMPERATURE CHART (D 341-39) MODIFIED

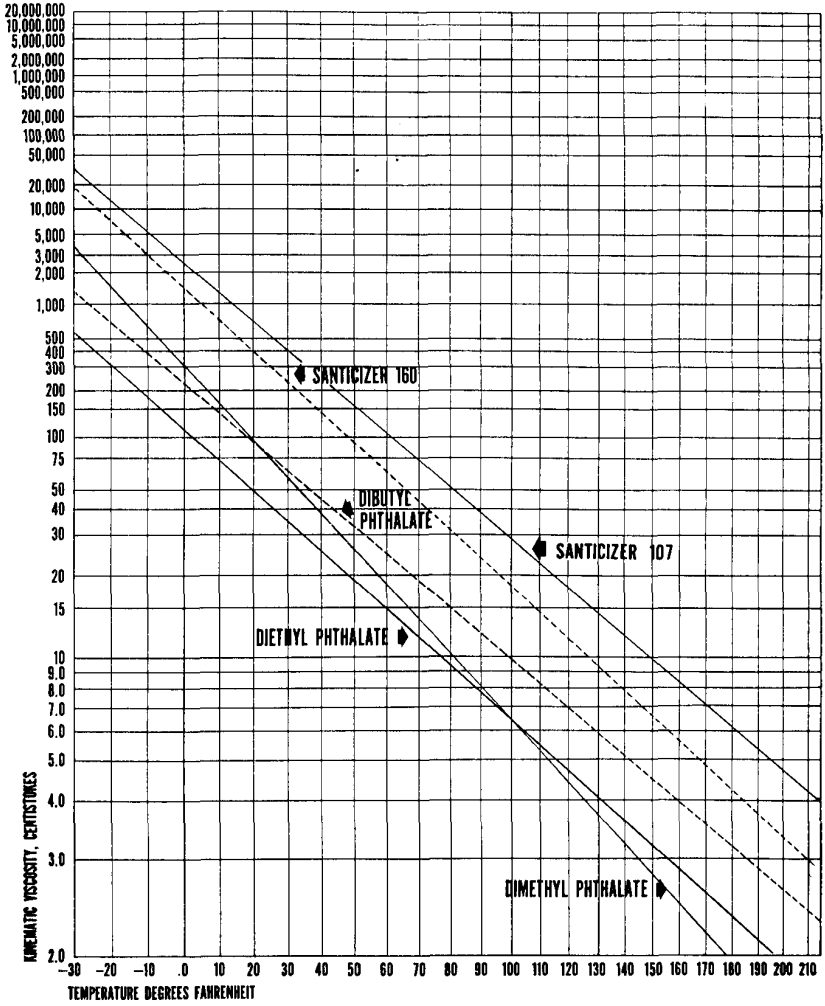

0615018

TOWOLDMON0039097

Figure 6

VISCOSITY CURVES PHTHALYL GLYCOLLATE PLASTICIZERS

ASTM STANDARD VISCOSITY-TEMPERATURE CHART (D 341-39) MODIFIED

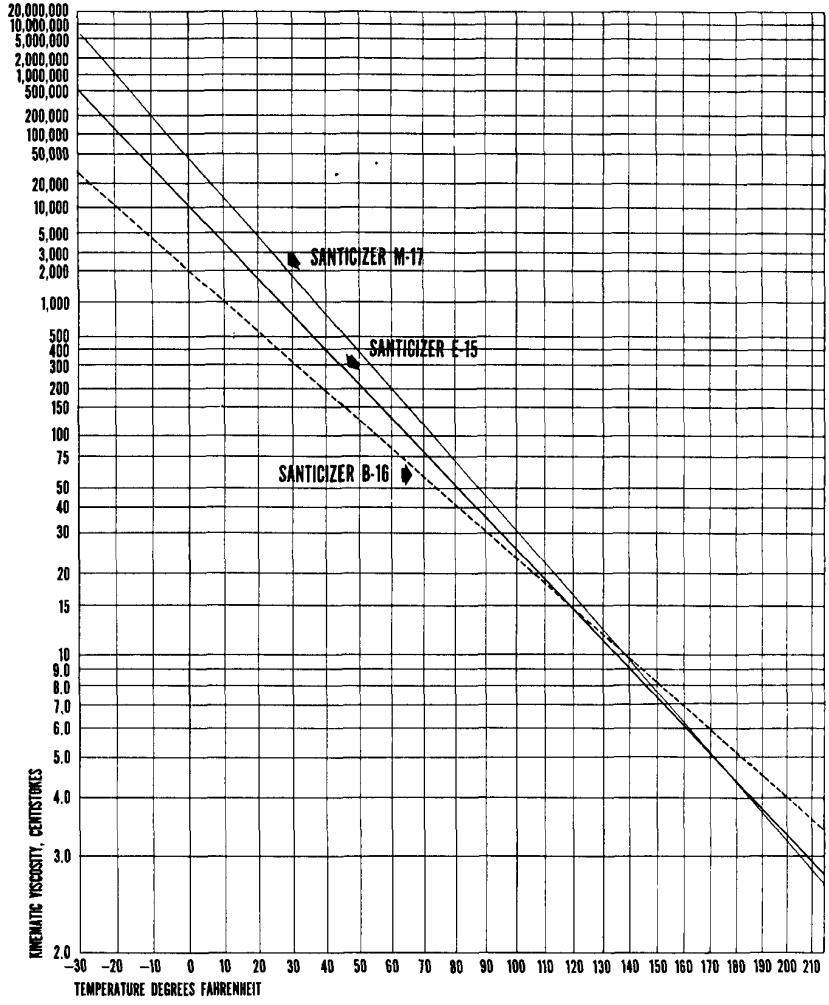

0615019

TOWOLDMON0039098

Figure 7

VISCOSITY CURVES PHOSPHATE PLASTICIZERS

ASTM STANDARD VISCOSITY-TEMPERATURE CHART (D 341-39) MODIFIED

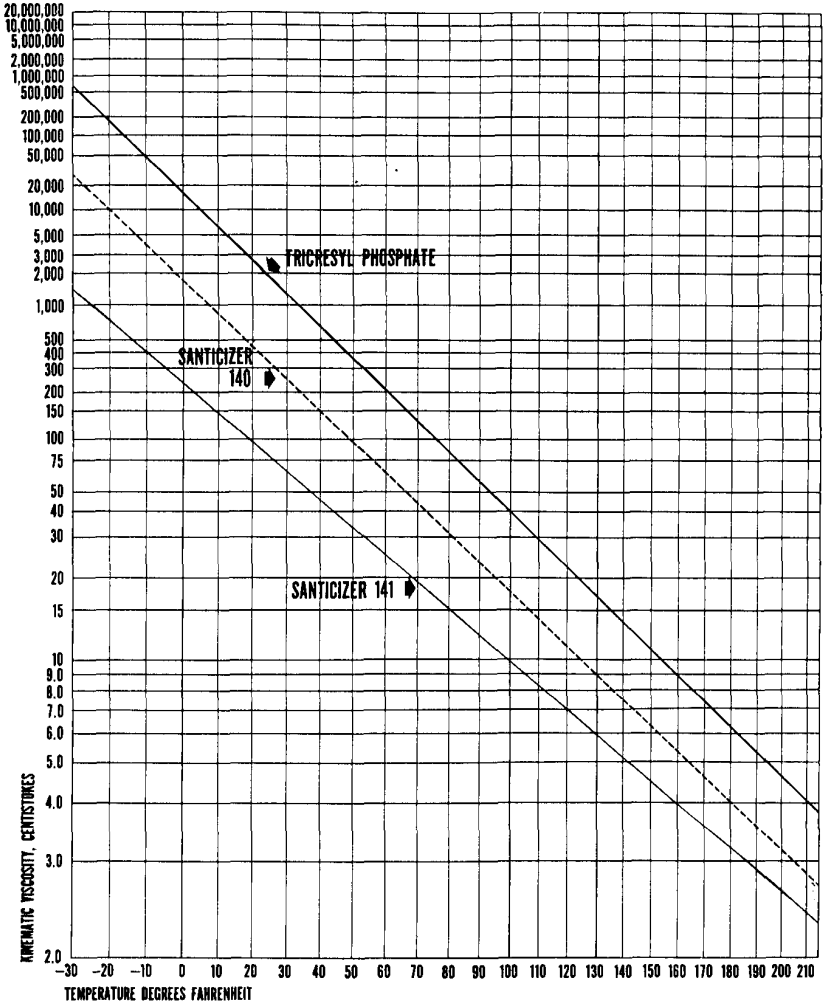

0615020

HJ:WA-D-650

Printed in U. S. A.

TOWOLDMON0039099



For further information about the Bulk Tank Storage of Plasticizers contact the nearest Monsanto Office.

MONSANTO CHEMICAL COMPANY

ST. LOUIS

AKRON • BIRMINGHAM • BOSTON • CHARLOTTE • CHICAGO • CINCINNATI
CLEVELAND • DETROIT • HOUSTON • LOS ANGELES • NEW YORK
PHILADELPHIA • PORTLAND (Ore.) • SAN FRANCISCO • SEATTLE

MONSANTO CHEMICALS LTD.
London

MONSANTO CHEMICALS (AUSTRALIA) LTD.
Melbourne

MONSANTO (CANADA) LTD.
Montreal · Toronto · Vancouver

Representatives in the Principal Cities of the World

0615021

TOWOLDMON0039100