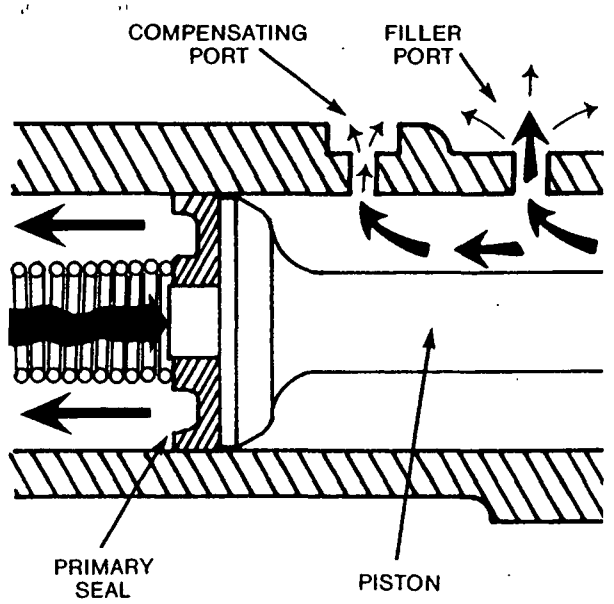

(Figure 14) Master cylinder piston and springs in the "brakes applied" position.

port and the filler port. When the brake pedal is pressed, the piston pushes the seal past the compensating port, pressure is built up in the wheel cylinder and disc brake caliper, causing the brakes to be applied. The spring in front of the primary seal is also compressed. Fluid in front of the secondary seal is pushed forward and travels into the reservoir through the filler and compensating ports.

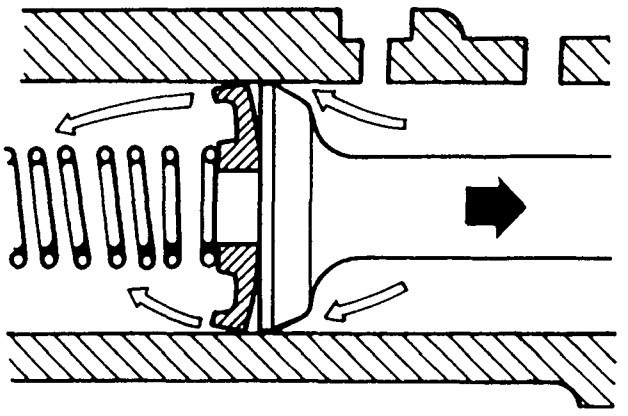

(Figure 15) Master cylinder piston and springs in the "brakes releasing" position.

When the brake pedal is released, the spring pushes the piston to its "at rest" position. Fluid behind the primary cup flows around the primary seal or through holes in the piston around the primary seal.

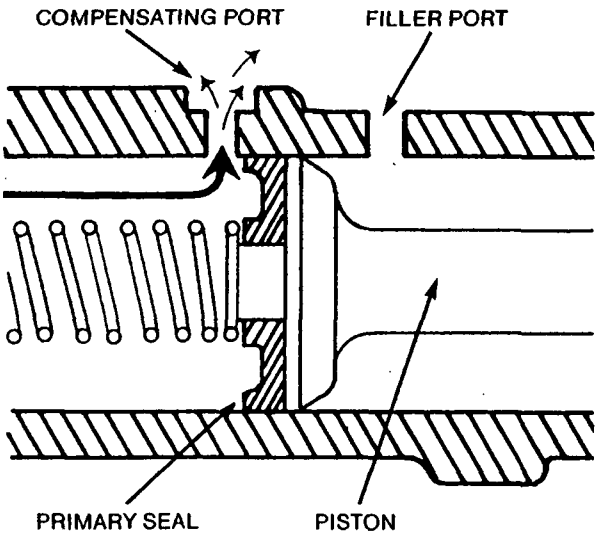

(Figure 16) Master cylinder piston and springs in the "brakes released" position.

When the master cylinder piston is fully released, pressure from the brakes pushes brake fluid through the compensating port back into the reservoir. At that point the brakes are fully released and ready for the next application.

Master Cylinder Problems

If the brakes drag, it is possible that the master cylinder pistons are not releasing, perhaps because of contamination between the seal or piston, or because of an overextended pushrod.

If the brakes do not hold pressure, rust or corrosion may have damaged the primary seal.

External leaks or a low brake fluid level in the reservoir may indicate a problem in the master cylinder. Don't rule out leaks elsewhere in the hydraulic system, however.

POWER BOOSTERS

Power boosters or "power brakes" help the driver stop the car by adding to the hydraulic pressure going to the brakes. Today, power brakes are standard equipment on many automobile models.

The power boosters that you will find on an automobile will be one of three types: vacuum suspended, hydro-boost, or electric/hydraulic actuated. They are manufactured in a variety of designs; however, the operation and testing procedures for all power boosters are similar.