tion of gas burning equipment.[19] For installation of equipment burning other types of fuel, refer to the *National Building Code* of the *N.B.F.U.*

4. Certain additional precautions may be required for certain fuels (such as undiluted liquefied petroleum gas) and consequently provisions of local codes and other authoritative agencies should be followed.

FUNDAMENTAL PRINCIPLES OF COMBUSTION

Regardless of the type of fuel under consideration, its combustion results in the production of gaseous products. Many kinds of solid fuels contain minerals which cannot be burned and are therefore left as a residue commonly called ash. Moreover, unless sufficiently high temperatures are employed and an ample supply of oxygen properly distributed is present,

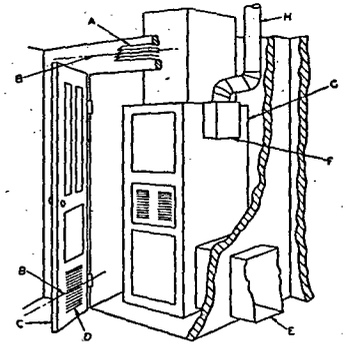

FIG. 5. ILLUSTRATION SHOWING AIR OPENINGS NECESSARY TO SUPPLY AIR FOR COMBUSTION WHEN APPLIANCE IS INSTALLED IN CONFINED SPACE

A. Ventilating air outlet register for furnace room, 1 sq in. free area for each 1000 Btu per hr furnace input located above relief opening of draft hood. Register must not be blocked by drapes or other furnishings.
B. Both registers must either face same large ventilated interior space or extend to such space by means of ducts. Vertical distance C/L to C/L of registers should be not less than 3½ ft.
C. Suggest room access door be not less than 6 ft high by a width sufficient to provide for installation or removal of furnace. At least 2 ft horizontal clearance should be provided in front of furnace when closet door is open, or 18 in. when door is closed.
D. Combustion and ventilation air inlet register for furnace room, 1 sq in. free area for each 1000 Btu per hr furnace input, located at or below combustion air inlet to furnace. Register must not be blocked by drapes or other furnishings.
E. Air circulated by furnace must be handled by ducts which are sealed to furnace casing and are entirely separate from means provided for supplying combustion and ventilation air.
F. Spacing between draft hood and wall at least 6 in. (unless approved for closer spacing). If flue products may be directed toward wall, 12 in. spacing recommended.
G. No part of furnace casing closer than 6 in. to wall (unless approved for closer spacing).
H. Flue should terminate above peak of roof and above nearby walls to assure satisfactory flue performance. In installations where the flue terminal is below nearby walls or roof peaks, an effective vent cowl should be used.

the combustible constituents of solid, liquid, and even gaseous fuels cannot be completely burned. Incomplete or partial combustion of all fuels produces toxic gases, such as carbon monoxide, with smaller quantities of aldehydes, ketones, and other hydroxylated hydrocarbon compounds. This fact indicates that, while combustion processes involving common types of fuel may be regulated by experienced operators to produce the most efficient results, normal combustion processes can be so unbalanced as to create hazards unless both design and operation are planned with a knowledge of the fundamental principles of combustion.

Combustion may be defined as the chemical combination of a substance with oxygen resulting in the evolution of heat, and usually some light. The rate of combustion depends upon the rate of reaction of the substance with oxygen, upon the rate at which oxygen is supplied, and upon the tempera-

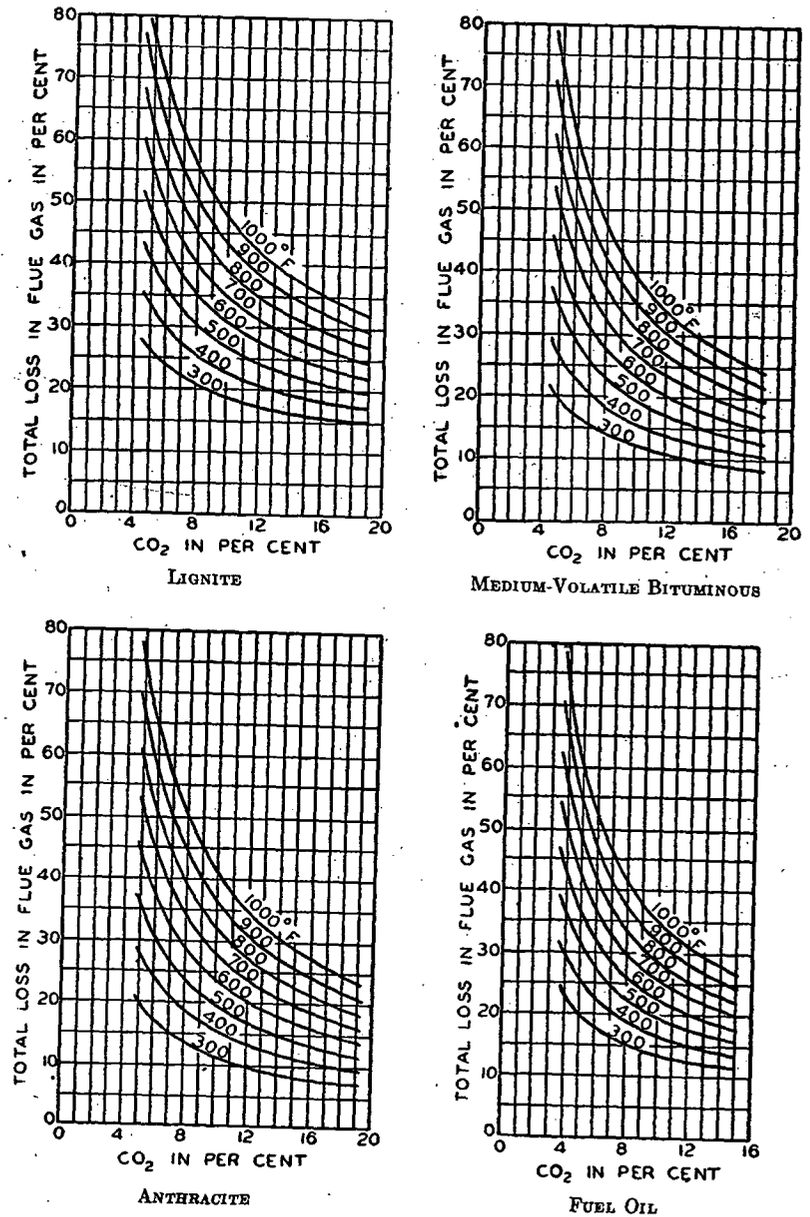

FIG. 6. FLUE GAS LOSSES WITH VARIOUS FUELS[2]

Flue Gas Temperature Shown. Loss is Based on 65 F Room Temperature.