PLAINTIFF'S EXHIBIT

CT-311

FLUID-TITE®

Asbestos-Cement

SMALL DIAMETER SEWER PIPE

and Accessories

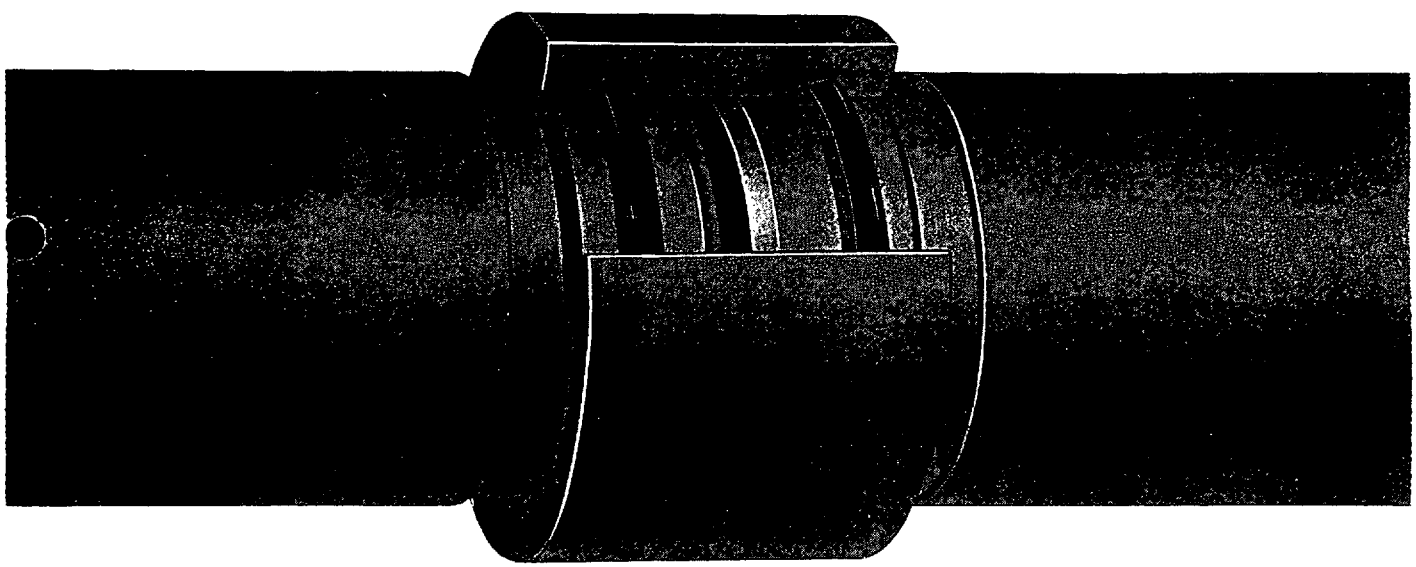

made by CERTAIN-TEED®

PIPELINES FOR THE NEEDS OF GROWING AMERICA

CTD031251

For Smoothest – Easiest – Most Economical

Building Sewer Installations –

CERTAIN-TEED SMALL DIAMETER SEWER PIPE

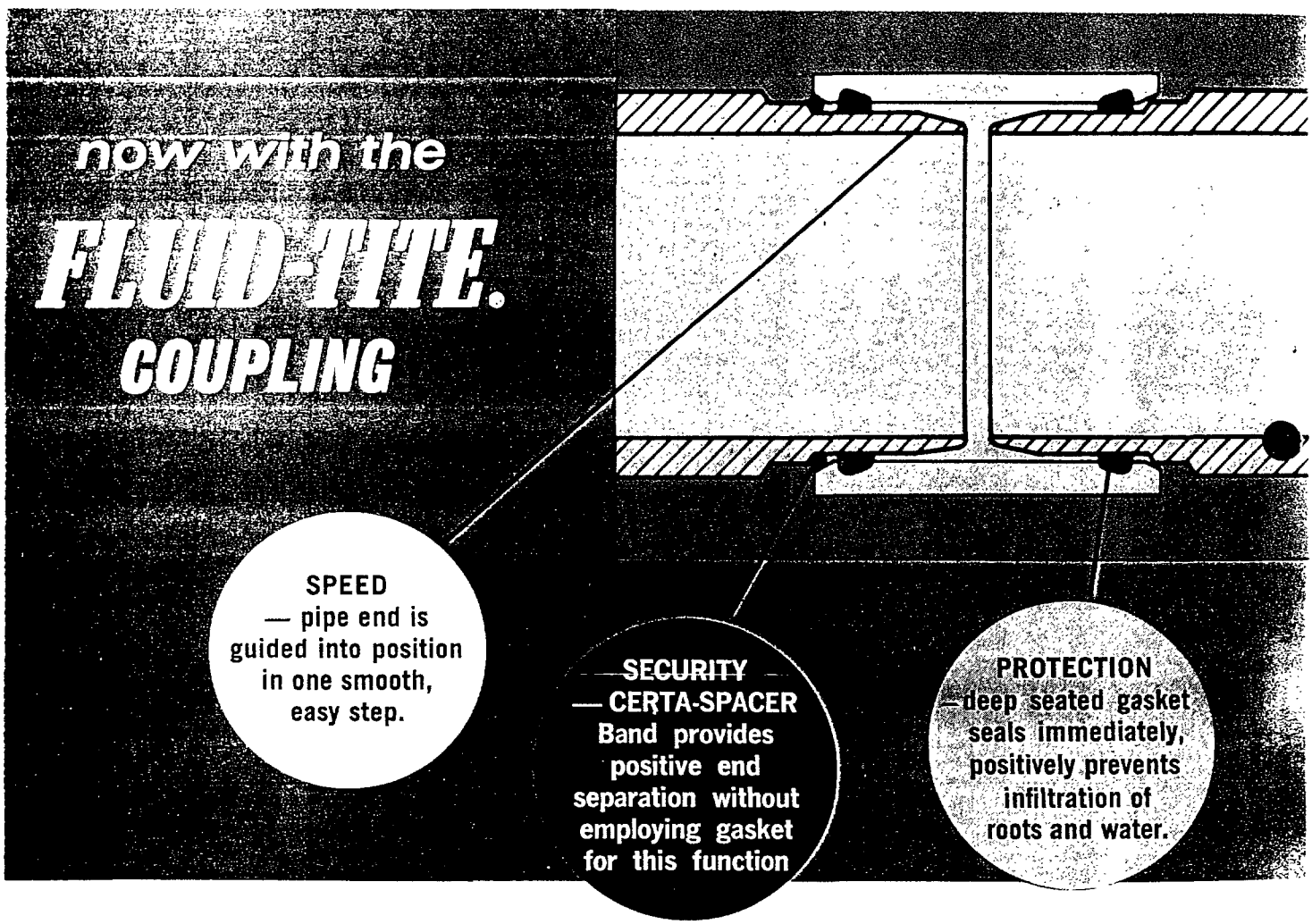

With its exclusive FLUID-TITE Coupling, Certain-teed brings new efficiency, security and convenience to modern house connection sewer pipe installation. For the first time, the advantages of the finest asbestos-cement pipe are combined with absolute protection against infiltration and exfiltration. Root intrusion is positively prevented. Service life expectancy is prolonged. Local and national code requirements are met or surpassed. Certain-teed Sewer Pipe can be expected to provide a lifetime of trouble-free performance.

CTD031252

Dimensions & Tolerances — Certain-teed Asbestos-Cement Class 2400 Small Diameter Sewer Pipe, Couplings and Fittings

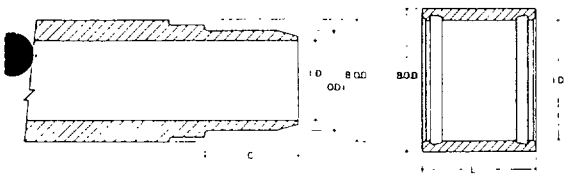

Pipe Size	PIPE B.O.D. Inches Nom.	I.D. Inches Nom.	O.D.₁ Inches ±.02"	C ±1/16 Inches	COUPLINGS I.D. Inches ±.025"	L +.25 Inches	B.O.D. Inches Nom.
Class 2400							
4"	4.87	4.00	4 62	2 09	4 71	4.75	5.92
5"	5.98	5.00	5 66	2 09	5.75	4.75	7.06
6"	7.04	6.00	6 66	2 09	6 75	4.75	8 12

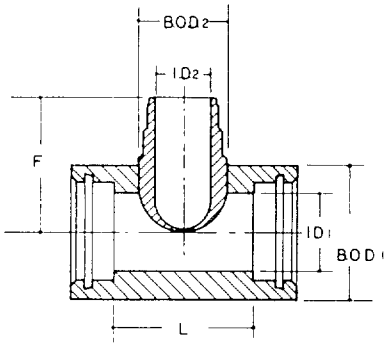

TEE FITTING

Pipe Size	Nom. I.D.₁"	Nom. I.D.₂"	B.O.D.₁" Nom.	B.O.D.₂" Nom.	L ±.125"	F" ±.125"
4"x4"	4.60	4 00	5 92	4 87	7 50	8.20
5"x5"	5.60	5.00	7 06	5.98	8.75	8.77
6"x6"	6.60	6 00	8 12	7 04	9 75	9.30
5"x4"	5.60	4 00	7 06	4 87	8 75	8.77
6"x4"	6.60	4 00	8 12	4 87	9.75	9.30
6"x5"	6.60	5 00	8 12	5 98	9 75	9.30

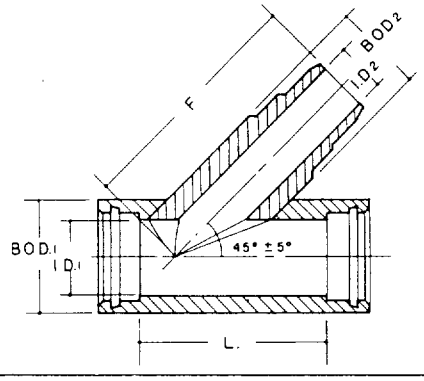

WYE FITTING

Pipe Size	Nom. I.D.₁"	Nom. I.D.₂"	B.O.D.₁" Nom.	B.O.D.₂" Nom.	L ±.125"	F" ±.125"
4"x4"	4.60	4 00	5 92	4 87	9.75	11.50
5"x5"	5.60	5.00	7 06	5 98	11.25	12.75
6"x6"	6.60	6 00	8 12	7 04	13.00	14 25
5"x4"	5.60	4 00	7 06	4.87	11 25	12 25
6"x4"	6.60	4 00	8 12	4.87	13 00	13 00
6"x5"	6.60	5 00	8 12	5 98	13 00	13 75

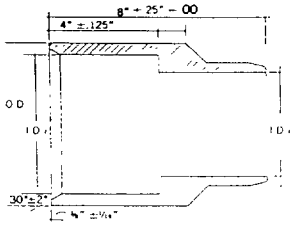

ADAPTOR—Bell and Spigot

Pipe Size	Nom. I.D.₁"	I.D.₂" ±.030"	B.O.D." Nom.
4"	4.00	5.45	6.42
5"	5.00	6.50	7.50
6"	6.00	7.50	8.67

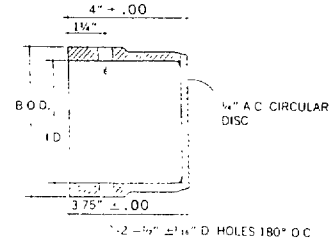

COUPLING END PLUG

Pipe Size	Nom. I.D."	B.O.D." Nom
4"	4.00	4.87
5"	5.00	5 98
6"	6.00	7.04

Sturdy, lightweight lengths are easy to handle.



Lubrication of pipe end takes only a few seconds.

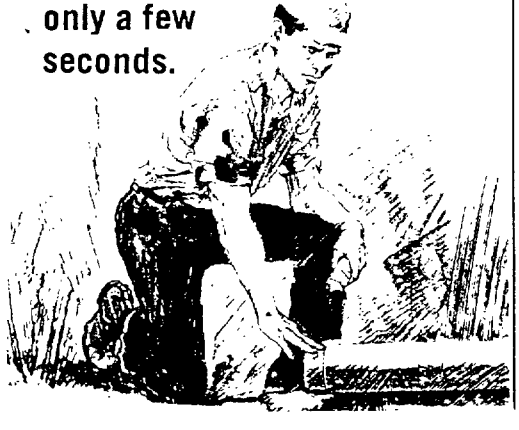

Coupling up is quick and completely secure.



CTD031253

MEO PIPE NIPPLE

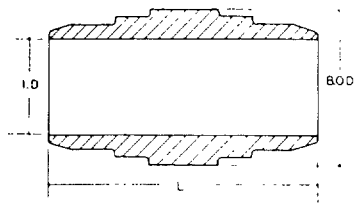

Pipe Size	Nom. I.D."	B.O.D. Nom.	L" ±.25"
4"	4.00	4.87	24 OR 36
5"	5.00	5.98	24 OR 36
6"	6.00	7.04	24 OR 36

BENDS

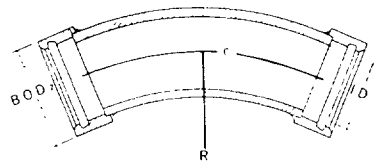

Pipe Size	Nom. I.D."	B.O.D.$_2$" Nom.	R" Radius
4"	4.00	5.92	36
5"	5.00	7.06	36
6"	6.00	8.12	36

Laying Length — C

Pipe Size	11¼°	22½°	30°	45°
4"	7.2	14.3	18.9	28.3
5"	7.2	14.3	18.9	28.3
6"	7.2	14.3	18.9	28.3

ELBOWS

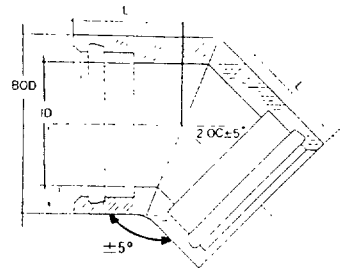

Pipe Size	Nom. I.D."	B.O.D." Nom.	L +.25" −.00
	11¼°, 22½°, 30°, 45°		
4"	4.60	5.92	5.375
5"	5.60	7.06	5.375
6"	6.60	8.12	5.375
	90°		
4"	4.60	5.92	5.375
5"	5.60	7.06	5.375
6"	6.60	8.12	5.375

DUPLEX ADAPTOR COUPLING
Clay Spigot to A/C

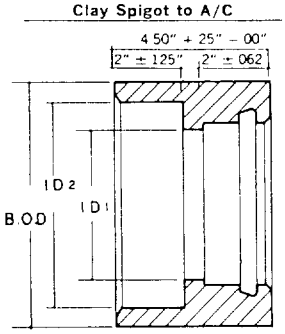

Pipe Size	Nom. I.D.$_1$"	I.D.$_2$" ±.10"	B.O.D." Nom.
4"	4.00	6.25	7.19
5"	5.00	7.25	8.23
6"	6.00	8.50	9.54

DUPLEX ADAPTOR COUPLING
Cast Iron to A/C

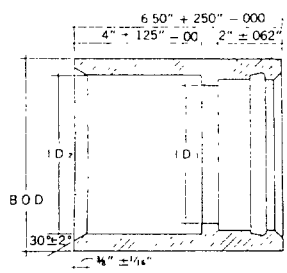

Pipe Size	Nom. I.D.$_1$"	I.D.$_2$" ±.030"	B.O.D." Nom.
4"	4.35	5.45	6.42
5"	5.35	6.50	7.50
6"	6.35	7.50	8.67

INCREASOR ADAPTOR
Cast Iron to A/C

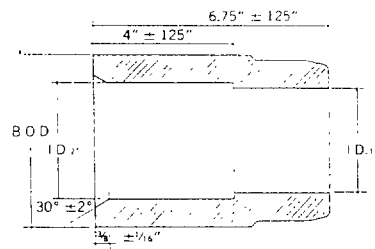

Pipe Size Cast Iron to A/C	Nom. I.D.$_1$"	I.D.$_2$" ±.030"	B.O.D." Nom.
2"x4"	2.95	3.20	4.81
3"x4"	3.80	4.10	5.04
4"x5"	4.70	5.10	6.08
4"x6"	4.70	5.10	6.91

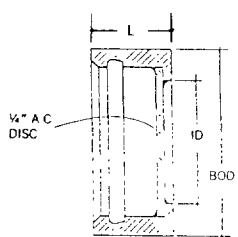

END CAP

Pipe Size	L +.25" −.00	Nom. I.D."	B.O.D." Nom.
4"	3.00	4.00	5.92
5"	3.00	5.00	7.06
6"	3.00	6.00	8.12

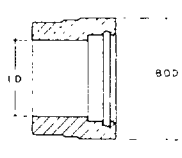

INCREASOR ADAPTOR
A/C to A/C

Pipe Size	I.D." ±.025"	B.O.D." Nom.
4"x5"	4.60	5.92
4"x6"	4.60	7.04
5"x6"	5.60	7.06

CTD031254



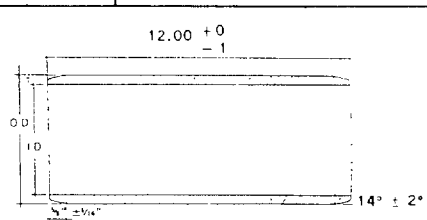

FULLY MACHINED NIPPLE

Pipe Size	Nom. I.D."	O.D." ±.02"	T" Min.
4"	4.00	4.62	0.20
5"	5.00	5.66	0.22
6"	6.00	6.66	0.22

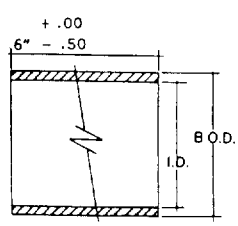

SLEEVE ADAPTOR

A/C FIELD CUT TO A/C FIELD CUT OR CLAY SPIGOT OR C.I.

	CLAY		A/C OR C.I.	
Pipe Size	I.D." ±.100"	B.O.D." Nom.	I.D." ±.030"	B.O.D." Nom.
4"	6.00	7.00	5.45	6.42
5"	—	—	6.50	7.50
6"	8.50	9.5	7.50	9.50

VERSATILE–ADAPTABLE

TYPE AND SIZE OF RINGS NEEDED FOR FITTINGS

FITTING	SIZE	RING	Catalog No.
Increasor Adaptor-C.I. Cast Iron SW Spigot end A/C Bell end	2 x 4 3 x 4 4 x 5 4 to 6	One .66 x 3.39 One .55 x 4.03 One .55 x 4.97 One .55 x 4.97	87632
Cast Iron XH Spigot end to A/C Bell end	2 x 4 3 x 4 4 x 5 4 to 6	One .55 x 3.13 One .375 x 3.55 One .425 x 4.90 One .425 x 4.90	87676
Sleeve Adaptor A/C Rough Barrel to A/C Rough Barrel	4"	Two .375 x 5.08	87456
	5"	Two .375 x 6.07	87556
	6"	Two .375 x 6.97	87656
A/C Field Cut to Cast Iron SW Spigot end	4"	One .375 x 5.08 One .75 x 5.39	87457
	5"	One .375 x 6.07 One .75 x 6.27	87557
	6"	One .375 x 6.97 One .75 x 7.17	87657
A/C Field Cut to Cast Iron XH Spigot end	4"	One .375 x 5.08 One .66 x 5.38	87458
	5"	One .375 x 6.07 One .66 x 6.27	87558
	6"	One .375 x 6.97 One .66 x 7.17	87658
A/C Field Cut to Clay Spigot end	4"	None	87459
	5"	None	87559
	6"	None	87659
Bell & Spigot Adaptor Cast Iron SW Spigot end to A/C Bell	4"	One .75 x 5.39	87460
	5"	One .75 x 6.27	87560
	6"	One .75 x 7.17	87660
Cast Iron XH Spigot end to A/C Bell	4"	One .66 x 5.38	87461
	5"	One .66 x 6.27	87561
	6"	One .66 x 7.17	87661
A/C Field Cut to A/C Bell	4"	One .375 x 5.08	87424
	5"	One .375 x 6.07	87524
	6"	One .375 x 6.97	87624

FITTING	SIZE	RING	Catalog No.
Duplex Adaptor Coupling Cast Iron SW Spigot end to A/C Machined end	4"	One 4" F.T. One .75 x 5.39	87455
	5"	One 5" F.T. One .75 x 6.27	87555
	6"	One 6" F.T. One .75 x 7.17	87655
Cast Iron XH Spigot end to A/C Machined end	4"	One 4" F.T. One .66 x 5.38	87463
	5"	One 5" F.T. One .66 x 6.27	87563
	6"	One 6" F.T. One .66 x 7.17	87663
A/C Field Cut to A/C Machined end.	4"	One 4" F.T. One .375 x 5.08	87464
	5"	One 5" F.T. One .375 x 6.07	87564
	6"	One 6" F.T. One .375 x 6.97	87664
Clay Spigot (SS and XS) to A/C Machined end (one end caulked)	4"	One 4" F.T.	87423
	5"	One 5" F.T.	87523
	6"	One 6" F.T.	87623

Note: All dimensions are subject to manufacturing tolerances

MEETS ASTM C 644 STANDARD SPECIFICATION

Certain-teed FLUID-TITE® Asbestos-Cement Small Diameter Sewer Pipe meets the requirements of the latest issue of the American Society For Testing Materials Standard Specification for Asbestos-Cement Nonpressure Small Diameter Sewer Pipe, Designation: ASTM C 644.

CTD031255

ASBESTOS-CEMENT FLUID-TITE® SMALL DIAMETER SEWER PIPE AND ACCESSORIES

Note: All Fittings are interchangeable with other A/C Manufacturers' Fittings

TO CONNECT →	Standard Coupling or Sewer Fitting	Standard Sewer Pipe End	Sewer Pipe Field Cut End
Standard Sewer Pipe End	Directly	Standard Sewer Pipe Coupling	Duplex Adaptor
Sewer Pipe Field Cut End	Bell and Spigot Adaptor	Duplex Adaptor	Sleeve Adaptor
Standard Sewer Pipe End Smaller Size	A-C to A-C Increaser Adaptor	A-C to A-C Increaser Adaptor and Standard Coupling	A-C to A-C Increaser Adaptor and Duplex Adaptor
Clay Bell End Branch Connection (No Plastic Joint)	Pipe Nipple Yarned and Caulked (No "O" Ring)	Directly Yarned and Caulked (No "O" Ring)	Directly Yarned and Caulked (No "O" Ring)
Clay Spigot End	Duplex Adaptor and Pipe Nipple Yarned and Caulked (No "O" Ring)	Duplex Adaptor Yarned and Caulked (No "O" Ring)	Sleeve Adaptor Yarned and Caulked (No "O" Ring)
Cast Iron Bell End	Pipe Nipple	Pipe Nipple and Standard Coupling	Pipe Nipple and Duplex Adaptor
Cast Iron Spigot End	Bell and Spigot Adaptor	Duplex Adaptor	Sleeve Adaptor
Cast Iron Spigot End Smaller Size	C-I to A-C Increaser	C-I to A-C Increaser and Standard Coupling	C-I to A-C Increaser and Duplex Adaptor

CERTAINTEED

Pipe & Plastics Group

CERTAIN-TEED PRODUCTS CORPORATION
P.O. BOX 860 VALLEY FORGE, PENNSYLVANIA 19482

CTD031256

ode No. 40-32-02-H