Size-Selective Gravimetric Sampling in Dusty Industries

HOWARD E. AYER, GLEN W. SUTTON, and IRVING H. DAVIS*

Occupational Health Program, National Center for Urban and Industrial Health, Cincinnati, Ohio 45202 and Division of Occupational Health, Michigan Department of Public Health, Lansing, Michigan 48914

Size-selective gravimetric sampling was conducted along with sampling by impinger for dust in 22 foundries. Three-hour personal samples were taken with a 10-mm cyclone to remove nonrespirable dust, and with a polyvinyl chloride membrane filter to collect a dust sample for weighing. Respirable free silica was determined on samples passing a horizontal elutriator. The evaluation of the potential silicosis hazard by a gravimetric limit was not inconsistent with judgment of the hazard based on impinger samples and the present ACGIH Threshold Limit Value. Size-selective gravimetric sampling is recommended as an alternative to impinger sampling.

Introduction

THE USE of size-selective sampling and weight concentration of "respirable" dust in evaluating inhalation hazards has been reviewed by Hatch and Gross[1] and by Morrow.[2] The advantages of this technique include the ability to sample over a full shift or a major fraction thereof, automatic compensation by the size-selective device for shape, density, and degree of agglomeration of dust, the ability to use personal samplers to obtain truer "breathing-zone" exposures, the greater possibility as contrasted with optical count for standardizing weight determinations, and a much lower cost per determination of weighted exposure to dust.

Two major criteria for selection of a "respirable" fraction are the criterion adopted by the British Medical Research Council (MRC) and confirmed by the Pneumoconiosis Conference in Johannesburg in 1959[3] and the criterion suggested at a special meeting sponsored by the U. S. Atomic Energy Commission (AEC) in Los Alamos in 1961.[4] Beekmans[5] has demonstrated mathematically that, for typical industrial-dust size distributions, weight fractions of respirable dust would be approximately the same under either criterion. Laboratory and industrial samplings by the U. S. Public Health Service Occupational Health Program confirm his calculations.

Samplers using horizontal elutriators that meet the MRC criterion are commercially available. The 10-millimeter-diameter cyclone described by Lipmann and Harris[6] was found by Sutton[7] to approach the AEC criterion at a flow of 2.0 liters per minute (lpm) and is readily available commercially. Other devices said to approach this criterion at higher flow rates are also available, but calibration by aerodynamic size has not yet been reported.

A major deterrent to extensive use of size-selective gravimetric sampling by industrial hygienists has been the absence of a suggested hygienic limit for this sampling technique. Reno *et al.*[8] reported a study in the Barre, Vermont, granite sheds which attempted to

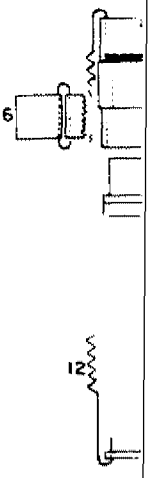

determine an equiv
particles per cubic
as a limit for Barre
Results of this study
ther comparative sa
1966. The combine
1966 studies are sa
to indicate that 10
give 0.1 milligram
per cubic meter (m
fraction. On the ba
pirable free silica p
gested a formula an
threshold limit valu
can Conference of
Hygienists (ACGIH

*H. E. Ayer and G. W. Sutton are with the National Center for Urban and Industrial Health. I. H. Davis is with the Michigan Department of Public Health.

Mention of commercial concerns or products does not constitute endorsement by the Public Health Service or the U. S. Department of Health, Education and Welfare.

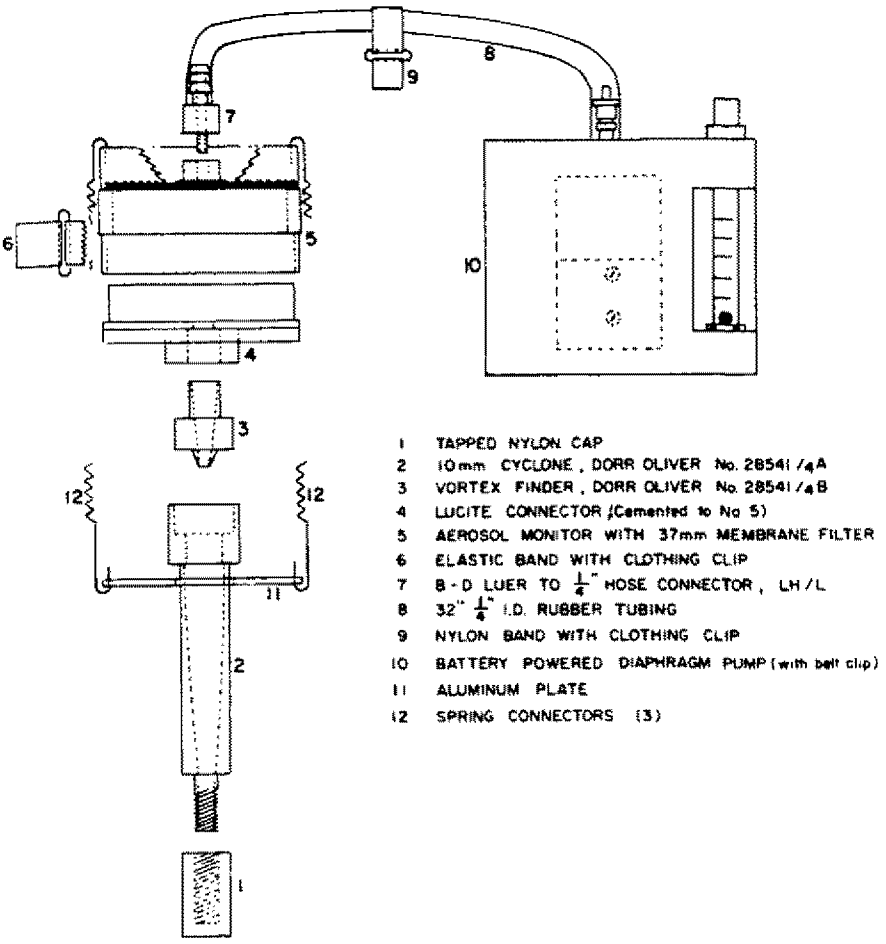

FIGURE 1. Personal sampler for respirable mass sampling.

determine an equivalent for the 10 million particles per cubic foot (mppcf) suggested as a limit for Barre granite dust by Russell.[8] Results of this study were inconclusive. Further comparative sampling was conducted in 1966. The combined results of the 1965 and 1966 studies are said by Sutton and Reno[10] to indicate that 10 mppcf of granite dust will give 0.1 milligram of free crystalline silica per cubic meter (mg/m^3) in the respirable fraction. On the basis of this 0.1 mg of respirable free silica per cubic meter, they suggested a formula analogous to the dust count threshold limit value (TLV) of the American Conference of Governmental Industrial Hygienists (ACGIH) for mineral dust:

$$\text{Resp. mg/m}^3 = 10/(\%\text{RFS} + 2)$$

where % RFS = percentage of free silica in the respirable fraction. The milligrams of respirable dust per cubic meter is measured by a size-selective sampler in accordance with one of the criteria previously mentioned. It must be emphasized that the percentage of free silica is that in the respirable fraction, because in 1936 Hatch and Moke[11] and in 1947 Holden *et al.*[12] reported that the percentage of quartz in the respirable fraction is much less than that in a gross sample of airborne foundry dust. Data reported herein confirm this fact.

Further causes for delay in the introduction of size-selective mass sampling include

the unavailability of suitable samplers until very recently, controversy over the merits of one size-selective criterion versus another, the previous unavailability of analytical methods for free silica in small samples, and the natural hesitation to replace or supplement a familiar technique with an unfamiliar one.

The sampling reported here was designed to determine:

1. Whether commercially available equipment (with minor modification) was suitable for personal size-selective sampling for dust concentration.
2. Which equipment could be used for obtaining "respirable" dust for free silica determinations.
3. Whether there were any unusual problems associated with the use of such equipment.
4. Whether inhalation hazard assessment by size-selective sampling and size-selected free silica was generally consistent with assessments by impinger sampling and gross airborne free silica.

For personal sampling, a 10-mm nylon cyclone, a plastic filter holder with 37-mm polyvinyl chloride membrane filters (nominal pore size 0.8 micron), and a battery-powered diaphragm pump were connected as shown in Figure 1.

Four different size-selective samplers were used to obtain samples for free silica determination.

Sampler	Sampling Rate	Cellulose Ester Membrane Filter Size
Aerotec "2" cyclone[15]	35 cfm	8×10 inches
Unico 18 cyclone	18 lpm	37 mm
Horizontal elutriator (according to Hamilton and Walton[14])	10 lpm	37 mm
Del electrostatic precipitator with 1½-inch cyclone	Maximum	

Gross airborne dust samples for free silica were taken with a high-volume sampler and a 4-inch-diameter pleated cellulose paper filter.

Survey Procedures

The size-selective sampling was conducted as an adjunct to an impinger sampling survey of a number of foundries by the Division of Occupational Health, Michigan Department of Public Health. The personal, size-selective gravimetric samples were taken for 2½ to 3 hours: an impinger sample was taken in the same man's "breathing zone" for 10 minutes during this period. Similar procedures were used in surveys of two foundries in a neighboring state.

The impinger samples were counted by the ACGIH procedure.[16] The filter membranes were weighed (usually twice) on a 0.01-mg sensitivity single-pan analytical balance or on a Cahn "Gram" electrobalance before sampling and twice after sampling on the same balance.

The free silica samples were taken in the general area of the operations being sampled by impinger and personal samplers. At some locations a shop cart was set up to take Aerotec "2," Unico 18, and 10-lpm horizontal elutriator samples simultaneously. At each of these locations a gross airborne dust sample was taken, and gross airborne dust samples were also taken at a number of locations where no size-selected free silica samples were taken.

High-volume, gross airborne dust samples and Del cyclone-separated samples were analyzed by an x-ray diffraction procedure. Aerotec "2" samples were analyzed by the phosphoric acid method of Talvitie.[16] For horizontal elutriator samples and Unico 18 samples, the phosphoric acid method was used with the colorimetric silica method of Talvitie and Hyslop.[17]

Results

Two hundred and eighty-three respirable mass-impinger count sample pairs collected during the winter of 1966-1967 are reported herein. Fifty-five gross airborne samples and fourteen respirable samples were analyzed for free silica. The percentage of free silica in gross airborne dust samples ranged from 4 to 62 with a mean of 23%. The percentage of

TABLE I
Impinger Count and Respirable Mass Concentration by Operation Group and Establishment

	Sand Mixing			Molding and Pouring			Hookout-Shakeout			Cleaning			Core Room		
Foundry	n*	mppcf	mg/m³	n	mppcf	mg/m³	n	mppcf	mg/m³	n	mppcf	mg/m³	n	mppcf	mg/m³
1	6	53	2.1	3	19	2.1	10	17	2.2	12	18	2.5	2	81	1.2
2	2	64	1.2	3	15	1.4	7	26	3.8	4	39	1.7	1	25	1.2
3	5	15	1.7	1	12	0.8	10	13	2.0	3	19	2.0	—	—	—
4	2	14	3.9	3	13	2.0	2	12	2.2	4	9.4	3.0	3	7.8	1.0
5	2	21	3.0	2	9.2	1.6	6	14	3.1	5	13	2.0	—	—	—
6	4	13	1.7	4	47	1.0	7	24	1.5	3	18	2.7	3	10	1.0
7	2	57	1.7	—	—	—	6	16	1.5	5	34	1.5	—	—	—
8	2	11	1.4	4	5.2	0.9	7	16	2.2	4	15	3.1	—	—	—
9	2	340	1.6	3	4.6	0.7	5	16	1.1	2	7.8	1.8	—	—	—
10	1	4.6	2.0	—	—	—	—	—	—	5	29	2.1	—	—	—
11	—	—	—	2	4.1	1.0	—	—	—	2	2.5	0.6	2	2.8	0.7
12	3	6.8	1.8	1	23	2.6	9	5.5	2.2	3	31	1.9	—	—	—
13	1	97	1.1	4	18	1.1	2	27	1.2	3	29	1.8	—	—	—
14	1	1.7	1.8	2	3.9	2.3	4	4.0	2.2	3	6.2	1.8	1	3.1	1.4
15	2	15	2.6	1	7.6	1.7	—	—	—	7	34	2.9	—	—	—
16	7	38	1.6	8	6.6	0.9	4	7.4	1.3	13	6.7	1.6	5	9.0	0.7
17	5	20	0.9	6	5.7	1.4	4	7.0	1.5	6	19	1.3	5	11	0.4
18		3.5	0.8		8	1.2		6	1.8		8	0.7		2	0.5
19		13	94		6	0.4		—	—		—	—		2	<0.3
20		350	4.3		6	0.8		8	1.3		18	0.7		—	—
21		26	1.4		10	2.2		4.5	2.4		20	1.5		—	—
22		11	1.9		12	1.4		4	1.3		7	4.1		—	—
Avg. through 17	47	42	1.8	47	13	1.3	83	15	2.1	84	19	2.1	22	16	0.8

* n = number of samples.

free silica in the respirable fraction ranged from 1.3 to 13.7, with a mean of 7.2%, as determined from samples taken with the horizontal elutriator.

Correlation between 10-minute impinger and 150- to 180-minute respirable mass samples for the entire 283 sample pairs was poor. The ratios of impinger million particles per cubic foot to respirable milligrams per cubic meter varied about a geometric mean of 8.2; the dispersion is indicated by a standard geometric deviation of 3. At least part of this variation might be attributed to the fact that the impinger sampled only one-fifteenth or so of the time that the mass sampler was operating. That this time factor did, indeed, increase the dispersion is suggested by the fact that the 283 impinger samples have a standard geometric deviation (σ_g) of 2.7 about their geometric mean of 10 mppcf, whereas the respirable mass samples vary about their geometric mean of 1.4 mg/m³ with a σ_g of 2.2.

The samples were divided into five groups as follows: (1) sand mixing, (2) molding and pouring, (3) hookout and shakeout, (4) casting cleaning, and (5) core room. Correlation within groups was also poor, and least-squares lines did not appear applicable.

Mean values for the samples by groups are shown in Table I. Samples collected in 1965 at four foundries and a number of foundry samples collected by another State Health Department were combined with the samples from the 1966–67 survey. Numbers of sample pairs for the 1965 sampling are not given, as unequal numbers of samples of the two types were taken.

To compare the evaluations of these foundries by the impinger method and by the respirable mass methods, a TLV of 10 mppcf (a rounded value from the mean gross airborne free silica) and a limit of 1.1 mg/m³ (from the suggested formula given here and the mean respirable free silica) were used. Those operations averaging less than ⅔ of the limit were judged "silicosis hazard unlikely," those between ⅔ of the limit and 1⅓ times the limit were judged "silicosis hazard possible," and those operations exceeding 1⅓ times the limit were judged "silicosis hazard likely." The comparisons on this basis are shown in Figure 2. Of 90

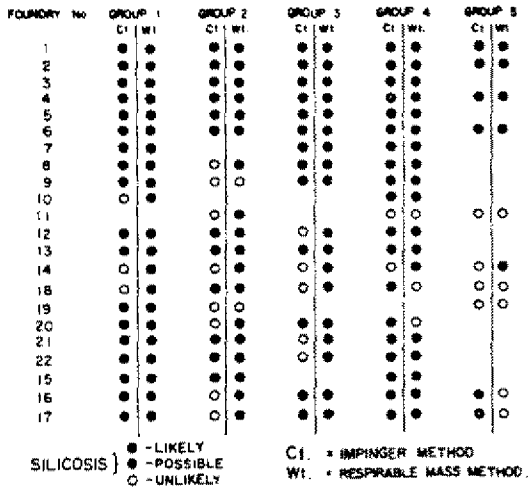

FIGURE 2. Silicosis hazard evaluation by two methods.

operations, 42 were judged equally hazardous by count and weight, 32 more hazardous by weight, and 16 more hazardous by count. Of the 90, however, only 9 were judged "safe" by one method and "hazardous" by the other.

Results of comparative sampling with the four size-selective devices are shown in Table II.

The difference between gross airborne and respirable free silica is similar to that found by Hatch and Moke[11] and by Holden *et al.*[12] In our study a difference in the percentage of free silica was also found between size-selective samplers with different selection characteristics. On six sample pairs, the percentage of free silica in a sample passing the Aerotec "2" at 35 cfm averaged 1.7 times the percentage in a sample passing the horizontal elutriator. In three sample pairs, the percentage of free silica in samples passing the horizontal elutriator averaged 1.9 times that passing a Unico ½-inch cyclone at 18 lpm.

There were no problems with worker acceptance of the personal samplers, and, in general, the equipment performed satisfactorily. It was found desirable for the industrial hygienist to start the personal samplers shortly after the beginning of the shift, usually at 7:00 A.M. Another set of samples could then be run after the lunch break.

TABLE II
Percentage of Free Silica in Gross Airborne Dust and Dust Passing Four Size-Selective Devices

Gross Air	Horizontal Elutriator	Aerotec "2" at 35 cfm	Unico 18 at 18 lpm	Del Cyclone
30	6.0	8.6	3.8	
37	8.3	14.2	5.7	
33	11.2	22.3		
24	8.6	15.5		5
26	8.3	14.5		6
31	4.1	8.4		
24	5.6		1.1	
25		13.8		5

Discussion

The results from a few comparative samples for free silica using different size-selective devices are insufficient to draw firm conclusions. However, even with only six and three pairs, respectively, the differences between the horizontal elutriator and the Aerotec "2" and between the horizontal elutriator and the Unico 18 were significant at the 95% level. The size-selection characteristics for the horizontal elutriators are well defined in comparison to the other size selectors used, as the former can be derived theoretically and have been extensively tested. The size-selection characteristics of the other three samplers are not derived theoretically; they have been determined by projected microscopic rather than aerodynamic size. Of the four samplers, only the horizontal elutriator has been shown to pass a weight fraction of dust comparable to that passed by the 2-lpm cyclone used for personal sampling.

To select the respirable fraction for free silica analysis, the horizontal elutriator, with its more precise cutoff characteristic, would appear to be the instrument of choice. For collecting samples for analysis of respirable free silica, it is therefore suggested that only horizontal elutriators designed according to the MRC criteria be used until it can be shown that other instruments yield equivalent results. The two commercially available hori-

zontal elutriators sample at rates of 50 lpm and 2.5 lpm, respectively. The former will not collect samples large enough for routine x-ray diffraction procedures, and the latter requires use of the colorimetric free silica procedure. Further development of simple field techniques for taking "respirable" dust samples for free silica analysis is obviously required.

The ideal in assessing silicosis hazard is an analysis for free silica of each personal sample. With present techniques, this is obviously impractical. The alternative, to pool a group of personal samples from a particular operation, is probably also not practical for most laboratories. A third method, one that will probably have to be used for some time, is to collect free silica samples at a central location which, it is hoped, will apply to several personal samples. Fortunately, it appears that the composition is less variable in the respirable fraction than in the gross airborne dust.

Some of the differences between hazard ratings by the count method and by the respirable mass method undoubtedly were caused by the small portion of the mass sample period included in the impinger sampling time; some are probably caused by the fact that the free silica percentages used were averages and did not necessarily represent the particular operation; and some, we feel, represent a more realistic treatment of the dust hazard by the size-selected gravimetric sampling. It is interesting to note that somewhat similar differences were seen by Lynch and Ayer[18] when they compared impinger count and membrane filter fiber counts from simultaneous adjacent samples in the asbestos textile industry (50% of the samples were in the same concentration group; 10% differed by more than one group; group boundaries differed by a factor of 2).

Conclusions

1. Size-selective personal sampling would be easier and cheaper, with results more reproducible for most industrial hygiene units.

2. In metal foundries, where the greatest number of dust exposures occur, silicosis hazard evaluations delimited by the formula

$$\text{Resp. mg/m}^3 = 10/(10\%\text{RFS} + 2)$$

where % RFS = percentage of free silica in the respirable fraction will generally be consistent with evaluations using the current ACGIH threshold limit.

3. The 10-mm cyclone is a suitable size selector for personal sampling, but for free silica analysis samples a horizontal elutriator designed according to the MRC criteria may be required until other instruments are demonstrated to be equivalent.

Acknowledgments

The field sampling, dust counting, and free silica analyses were performed by numerous staff members of the Division of Occupational Health, Michigan Department of Public Health, and the Occupational Health Program, U. S. Public Health Service. Their contribution and suggestions are deeply appreciated.

References

1. Hatch, T. F., and P. Gross: *Pulmonary Deposition and Retention of Inhaled Aerosols*, Academic Press, New York (1964).
2. Morrow, P. E.: Evaluation of Inhalation Hazards Based upon the Respirable Dust Concept and the Philosophy and Application of Selective Sampling, *Amer. Ind. Hyg. Assoc. J. 25:* 213 (May-June 1964).
3. Orenstein, A. J. (Ed.): *Proceedings of the Pneumoconiosis Conference, Johannesburg, 1959*, J. & A. Churchill, Ltd., London (1960).
4. Reported by Lippmann, M., and W. B. Harris, in reference 6.
5. Berkmans, J. M.: Correction Factor for Size-Selective Sampling Results Based on a New Computed Alveolar Curve, *Ann. Occup. Hyg. 8:* 221 (July 1965).
6. Lippmann, M., and W. B. Harris: Size-Selective Samplers for Estimating "respirable" Dust Concentrations, *Health Phys. 8:* 155 (1962).
7. Sutton, G. W.: Calibration of Aerodynamic Size vs. Efficiency for a Miniature Cyclone, Presented at the 1966 annual meeting, American Industrial Hygiene Association, Pittsburgh, Pennsylvania.
8. Reno, S. J., H. B. Ashe, and B. T. H. Levine: A Comparison of Count and Respirable Mass Dust Sampling Techniques in the Granite Industry, Presented at the 1966 annual meeting, American Industrial Hygiene Association, Pittsburgh, Pennsylvania.
9. Russell, A. E.: Silicosis and Other Dust Diseases, The Harold S. Boquist Second Annual Memorial Lecture given at the University of Minnesota, December 3, 1936.
10. Sutton, G. W., and S. J. Reno: *Sampling in Barre, Vermont, Granite Sheds*, TR-40, Occupational Health Program, NCUIH (April 1967).
11. Hatch, T., and C. B. Moke: The Mineralogical Composition of Airborne Foundry Dust, *J. Ind. Hyg. Toxicol. 18:* 91 (1936).
12. Holden, F. R., W. C. L. Hemeon, and E. C. Hyatt: Appraising exposures to silica dust, *J. Ind. Hyg. Toxicol. 29:* 265 (1947).
13. Harris, W. B., and M. Etsenard: Dust Sampler Which Simulates Upper and Lower Lung Deposition, *AMA Arch. Ind. Hyg. Occup. Med. 8:* 446 (1953).
14. Hamilton, R. J., and W. H. Walton: The Selective Sampling of Respirable Dust, In *Inhaled Particles and Vapours*, C. N. Davies, ed.), Pergamon Press, London (1961).
15. Committee on Standard Methods: *Standard Impinger*