PLAINTIFF'S EXHIBIT

CAP-1466

A S B E S T O S B U L L E T I N

Vol.6. No.3.

May - June, 1965.

Editor: C. Z. Carroll-Porczynski.

C O N T E N T S

		Page
Part 1.	ASBESTOS MINING.	57
Part 2.	ASBESTOS CEMENT.	61
Part 3.	ASBESTOS TEXTILES.	66
Part 4.	FRICTION MATERIALS	67
Part 5.	REINFORCED PLASTICS.	68
Part 6.	PLASTIC BUILDING MATERIALS AND PIPES	69
Part 7.	ASBESTOS JOINTING, PACKING ETC..	71
Part 8.	ASBESTOS PAPER, HEAT INSULATING MATERIALS. . .	73
Part 9.	REFRACTORY FIBRES	75
Part 10.	MISCELLANEOUS.	76
Part 11.	REVIEW OF JOURNALS	78

(C) Copyright Astex Publishing Co., 1965.

PART 1. ASBESTOS MINING.

CANADA.

210 CANADIAN ASBESTOS PRODUCTION. H. M. Woodroffe. Can.Mining J. February 1964, p.129.

Province	1964 short tons	$ value	1963 short tons	$ value
Quebec	1,245,442	125,897,947	1,158,210	116,582,134
Ontario	15,500	2,256,000	33,715	5,372,645
British Columbia	65,856	11,920,000	63,215	11,681,337
Newfoundland	50,281	8,296,365	20,390	3,320,064
Total:	1,377,079	148,370,312	1,275,530	136,956,180

The only producing mine in Ontario, Munro of Johns-Manville Co.Ltd. ceased operation on July 31st, 1964. Johns-Manville Co. has in hand an extensive exploration and development programme in Reeves Township about 40 miles of Timmins.

In British Columbia, Cassiar Asbestos Corp.Ltd. increased mill capacity to 1700 tons per day. The company continued its exploration programme at Clinton Creek, adding to the reserves of this promising deposit.

211 MAINTENANCE OF MINING EQUIPMENT AT CASSIAR, B.C. T. L. Horsley. Can. Min. Metall. Bull. No.624, Montreal, April, 1964, 443-5.

In connection with the change from a seasonal to a continuous mining at Cassiar asbestos mine, increased emphasis has been put on the preventive maintenance of mining equipment. Description is given of the organisation of the maintenance service, and details are adduced of some maintenance practices that have proved advantageous to the Cassiar operation.

212 CASSIAR ASBESTOS CORPORATION LIMITED. F. H. Stephens. West. Miner. Vancouver, 37, Aug. 1964, 48-54.

Notes are given on the history of the company, its mining and milling activities, geology of its mines etc., An aerial photo of the mine workings is included.

ASARCO ALV 0006087

U.S.A.

213 ASBESTOS. Timothy C. May. Preprint from U.S.Bureau of Mines Minerals Yearbook 1963, 15 p.

An annual review of U.S. consumption and world production and technology.

214 GEOLOGY AND MINERAL RESOURCES OF FLUVANNA COUNTY. J.W.Smith, R. C. Milici and S. S. Greenberg. Bull. Va Div.Miner.Resour. 79 Charlottesville, 1964, 62 pp.

General, structural and economic geology of this area in central Virginia is described. Mineral occurrences include talc, asbestos, garnet, rhodonite, amethyst, iron-bearing minerals, vermiculite, gold and building materials.

215 ASBESTOS SUBSTITUTE. Financial Times, April 2nd, 1965.

Fibres of silicon nitride show promise as a substitute for asbestos, reports the Norris research group of the U.S. Bureau of Mines, Washington 25, D.C. The fibres "grown" so far are said to be very fine, only a few microns in diameter. However, their cost is low and they show good resistance to oxidation up to 2,250 degrees Fahrenheit. Research is continuing to try to make the fibres thicker and longer.

U.S.S.R.

216 NEW FINDINGS OF CHRYSOTILE ASBESTOS IN THE SIBERIAN PART OF THE SOVIET UNION. Z. Vejnar. Vestn. Ustred. ustavu geol., 1964, 39, No.1, 53-4 (in Czech.): Ref. Zhur. Geol., 1965, 1 I 54.

Two chrysotile asbestos deposits have been recently discovered and investigated. The Aktovrakskoe deposit (upper part of the Yenisei basin) is associated with the Tubinskii ultrabasic massif; its length is about 4 km. and width about 0.5 km. The length of asbestos fibres is in average 18 - 25 mm., occasionally reaching 10-12 cm. The Il'chirskoe deposit (160 km. of Irkutsk) is associated with a small ultrabasic massif (1700 x 400 m). In the zone of concentrated asbestos veins, the asbestos content is up to 10%; in the less rich zones, it is 1.5 - 2.5%. The amount of asbestos in this deposit is supposed to be 7 - 8 mill.tons. In the Kazakh SSR, there is an asbestos deposit near Dzhetigarin. The asbestos resources of the Soviet Union are the largest in the world.

ASARCO ALV 0006088

217 A CONTRIBUTION TO THE PROBLEM OF THE ORIGIN OF SOME CHRYSOTILE ASBESTOS DEPOSITS IN EASTERN ASIA. PART II (SHMENSKIE) DEPOSITS OCCURRING IN SERPENTINIZED ULTRABASIC ROCKS. Z. Vejnar. Sb.geol.ved., 1963, LG1, 7-30(in English). Ref. Zhur.Geol., 1965, 2I60.

Chrysotile asbestos deposits in the Shmenskie province and other districts(China) are described. The length of the asbestos fibre, varies from 0.7 cm. to 10-12 cm. and even to 50 cm. (in the case of longitudinal orientation). The genesis of the asbestos is connected with the serpentinization of olivine-enstatic pyroxenite and enstatic dunite.

218 COMPACTING ASBESTOS FOR PACKING. W. M. Borodin. Stroit.Mat. 1964, 10, No.8, 35.

A study has been carried out of the problem of compacting asbestos fibres produced by asbestos-dressing factories, in order to reduce the volume of the product and thus facilitate the transport and storage. It has been found that compacting under pressure of 5 to 50 kg/cm^2 did not affect the texture of the fibres or down-grade the product. The most convenient for transport are briquets of the size 20 x 40 x 75 cm, weighing 40 - 50 kg depending on the sort of asbestos. They can be produced under pressures of 10 - 20 kg/cm^2. The resilient effect, i.e. the increase of the dimensions of the briquet after removal from the press, amounts to a few percent. The use of a compacting machine results in considerable savings (space in transport and storage, packaging materials etc.)

AFRICA.

219 NEW MILLS FOR ASBESTOS MINES IN TRANSVAAL. S.Afric.Mechanised Handl.Equipm., 1964, 13, No.9, 3-4.

New types of mills for asbestos mines used in Transvaal are briefly described.

220 BECHUANALAND G.S. ANNUAL REPORT. Mining J. February 19th, 1965, p.135.

Chrysotile asbestos occurences in the Bangwaketse Tribal Territory were investigated by diamond drilling.

221 RHODESIA MINERAL PRODUCTION. Mining J.Feb.26,1965,p.156.

Asbestos production in 1964 increased by 11,200 tons worth an additional £850,000.

ASARCO ALV 0006089

EUROPE.

222 GEOLOGICAL NOTES ON MAGNESITE AND CHRYSOTILE ASBESTOS IN ULTRABASIC FORMATIONS. D. Deleanu. Revista Minerlor, 1964, 15, No.3, 146-150 (Rum.).

Deposits of chrysotile asbestos in the ultrabasic formations of the Banat district are described. They are exploited from 1948. The vein of asbestos occurs in pyroxenite, in gabro-peridotile-serpentine formations, and in other ultrabasic rocks in conjunction with acid rocks. Data of the dimensions, of asbestos veins and fibres in several locations are given.

223 ASBESTOS IN THE GRANITE OF JIULUI VALLEY. M. Trifulescu and L. Teodoru. Commun.geol.(RPR), 1963, 2, 73-81; Ref. Zhur. Geol. 1964, 11 I 60.

In amphibolitic granites of the Jiului valley (Rumania) there occur fissures filled with fibrous amphiboles. The asbestos fibres are parallel or perpendicular to the fissure walls, and have different sizes depending on the thickness of the fissure. Asbestos varieties which occur in these formations include anthophyllite, actinolite and tremolite. The formation of asbestos veins is presumably due to the substitution of pyroxenes by amphiboles and to the precipitation from solutions saturated with the oxides of magnesium, aluminium and calcium, originating from the dissolution of pyroxenes and amphiboles.

224 FRANCO-RUSSIAN MINERAL TRADE. Mining J. Feb.19,1965,p.138.

Under the terms of recently concluded trade agreement 30,000 metric tons of asbestos will be delivered by Russia in 1965.

225 GREEK ASBESTOS DEPOSITS. Mining Journal, Feb. 12, 1965, page 116.

Discussions are taking place on the question of the working of the asbestos deposits in the area of Ioannina, Greece. The undertaking which is interested in these deposits aims at mining asbestos to supply domestic asbestos-cement works and also for exports. Plans provide for prospecting operations to establish the extent of the deposits followed by the installation of mining equipment.

ASARCO ALV 0006090

228 ASBESTOS CEMENT PRODUCTS FROM INDIGENOUS AMPHIBOLE VARIETY OF ASBESTOS. N. Biswas and A. Lahiri. Indian Ceram. 1963, 10, No.5, 173-180.

229 NETHERLANDS APPLICATION 6,407,795. COMPOSITIONS CONTAINING FIBRES, HYDRAULIC CEMENT AND SILICA. Johns-Manville Corp.

Articles made of a fibrous material, hydraulic cement and a siliceous material, e.g. asbestos-cement pipes, are hardened in a chamber by steam at a pressure of 80 psi. Water is injected from the top of the chamber in such a way that the articles to be hardened are in contact with water for at least a part of the time of the steam treatment. The water is preferably at the same temperature as the steam. The treatment is continued for about six hours.

230 ASBESTOS CEMENT PIPES FOR SEWERAGE AND DRAINAGE. International Pipes and Pipelines, March 1965, p.34. -

A resistance to internal pressure is not as vital to sewerage pipes as it is to pressure pipes, but the crushing load becomes of major importance due to loading conditions which result from the depth at which the pipe may be laid and the type of fill used. A pipe suitable for laying with eight feet of cover would most probably not meet the conditions imposed at a depth of 20 ft. and obviously therefore a single classification for each pipe size is not practical. It is for this reason that pipes for sewerage and drainage are classed accordingly to a given range of loadings. This is the basis of the new 'British Standard Specification for Asbestos Pipes and Fittings for Sewerage and Drainage' B.S. 3656 - which was published in 1963.

231 THE ALL-SOVIET UNION CONFERENCE OF THE WORKERS OF THE ASBESTOS CEMENT INDUSTRY. Stroit.Mat., 1965, 11, No.1, 30-32.

Various topics discussed during this conference included, inter alia, a report on good results of hydro-fiberisation: normal milling gives 40-41% of fiberisation, whereas by the hydro method 75-95% can be achieved. The advantages of a short steaming of semi-products were described in two lectures. This method can be combined with treatment in water at an elevated temperature for 15-30 minutes until the semi-products reach 90-95% saturation with water. Steaming was carried out at 50-60°C for 2-4 hours (the rate of the increase of temperature should not exceed 3-5°C per hour). The combined hydrothermal treatment resulted in an increase in bending strength of about 10-15%. Other topics discussed included reports of new types of machinery and of general progress in mechanisation and automation in the asbestos cement industry of the Soviet Union.

ASARCO ALV 0006092

232 HYDROTHERMAL TREATMENT OF ASBESTOS CEMENT PIPES BASED ON PORTLAND CEMENT. T. M. Berkovich and S. S. Medvedev. Trudy N.-i. in-t asbesta, slyudy, asbestotsementnykh izdelii i proektir. str-va predpriyatii slyud.prom-sti, 1963, No.17, 70-84; Ref. Zhur.Khim., 1965, 2M209.

Experiments are described which comprised preliminarily curing test pieces made of asbestos cement in a moist atmosphere at a temperature of about 20°C for 8 and 24 hours respectively, and subsequently keeping them in water at 40, 60 and 80°C for 8, 16 hours and 1,2,3, and 5 days respectively. Then the samples were stored in a moist atmosphere at 20°C. The highest increase in strength (7.5-9.5% with respect to a 28-day strength, in one hour) was achieved when the preliminary curing was reduced from 24 hours to 8 hours. Treatment in water at 40°C was beneficial only if it lasted for a few days; prolongation to 7-28 days reduced the strength of the samples. The kinetics and parameters of the curing of asbestos cement pipes based on high-alite and low-aluminate cement were determined in air and in water at temperatures up to 75°C. Treatment in water at 75°C greatly accelerated the hardening.

233 THE USE OF CEMENTS CONTAINING CARBONATE MICROFILLERS IN THE PRODUCTION OF ASBESTOS CEMENT MATERIALS. A.S.Panteleev and V.M.Kolbasov. Tr.Mosk.Khim.-tekhnol. in-ta im. D.I.Mendeleeva, 1964, No.45, 9-18; Ref.Zhur.Khim., 1965, 2M203.

It has been found that small additions(5-10%) of finely ground carbonate minerals (chalk, limestone) to the clinker(during grinding) permit a more economic utilization of the latter in the production of asbestos cement materials, facilitate the production, improve the physico-mechanical properties of the products and extend their service life. In particular the flexural strength and impact resistance are increased, the coagulation tendency of asbestos cement slurries is suppressed and their filterability is improved. With carbonate additives, high-alumina clinkers can be used to a wider extent in the asbestos cement industry.

234 FRENCH PATENT 1,350,167. TREATMENT OF ASBESTOS FIBRES. Johns-Manville Corp.

A process for improving the filtration properties of asbestos fibres used in the manufacture of asbestos cement comprises spraying the fibres with a solution of sodium or potassium silicate or a mixture thereof. The fibres thus treated do not agglomerate or stick together even under pressure; they can be used immediately after the treatment or stored, even for a long period of time, without losing the properties acquired by the treatment.

ASARCO ALV 0006093

235 U.S.PATENT 3,121,659. APPARATUS FOR PRODUCING ASBESTOS CEMENT OF UNIFORM STRENGTH. Adalberto Amanzio.

This apparatus operates as follows: The weight 20 moves the rod 21 downward from the position illustrated in the drawing until the weight comes to rest on the support 23. This downward movement of the rod 21 causes the movable baffle 3 to be turned counter-clockwise as seen in FIG.3 so that the stream of viscous mixture discharged from the spout 1 is directed towards the right. It flows on the bottom of the vat 2 in a direction substantially diagonal of the vat from the right corner of the vat shown in FIG.3. Downward movement of the rod 21 causes counter-clockwise rotation of the bell crank lever 19 and longitudinal displacement of the connecting link 17 to the left as seen in FIG.1 with concomitant movement of the cam follower 14 to the right out of engagement with the radial face of the cam disc 13. The cam follower maintains its position, and the baffle 3 remains inclined from the upper left to the lower right as seen in FIG.3, until the other radial face of the cam disc 13 engages the cam follower 14 and shifts it to the left,thereby lifting the weight 20 and tilting the movable baffle 3 through the vertical position illustrated into an inclined position in which the baffle extends in a plane extending from the upper right to the lower left (FIG.3). In this position, the baffle deflects the stream of viscous mixture from the spout 1 towards the lower left corner of the vat 2 from which it flows diagonally across the bottom of the vat in a direction transverse of the direction of flow of the material during the first position of the movable baffle 3. The baffle retains its position as long as the cam follower 14 slidably engages the larger semi-cylindrical face portion of the cam disc 13. When the cam follower 14 reaches the end of the larger semi-cylindrical cam face portion, it is swung again to the right by the weight 20 and the movable baffle 3 returns to its first position in which it directs the stream of viscous mixture towards the lower right corner of the vat 2 as seen in FIG.3. Since the cam disc 13 rotates once for each turn of the cast iron roll 9, the movable baffle 3 is held in one of its two positions, indicated in full lines in FIG.5,during an entire revolution of the roll 9 and in the other position, indicated in broken lines in FIG.5, during the subsequent revolution of the roll 9. Asbestos fibers are oriented by the flow of the stream across the bottom of the vat 2 alternatingly in a diagonal direction from the lower right to the upper left and from the lower left to the upper right. This orientation is substantially maintained in the layer of material carried out of the vat and transferred by the revolving screen 6 to the belt 7 and finally deposited on the roll 9. Since the movable baffle 3 maintains each of its positions for a full turn of the roll 9, a sheet of asbestos cement is built up on the roll 9 from a large number of individual layers,which are superimposed in such a manner that the asbestos fibers in each layer are preferentially aligned transversely to the asbestos fibers in the layers immediately above and below.

ASARCO ALV 0006094

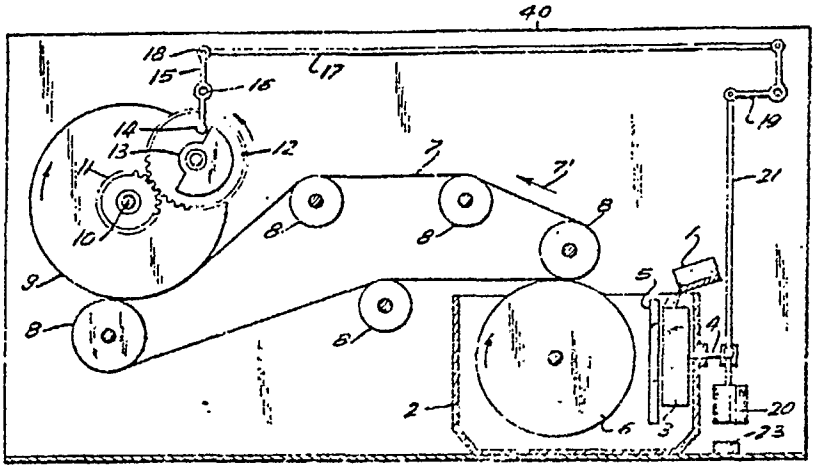

FIG. 1

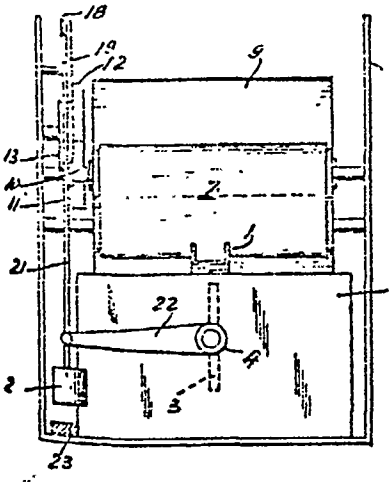

FIG. 3

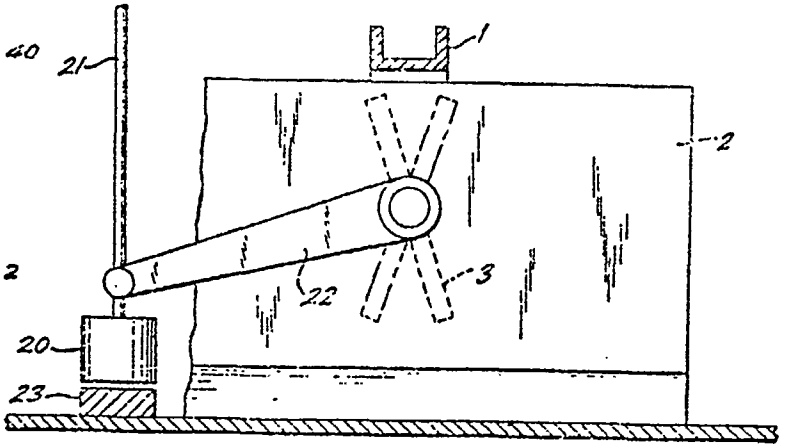

FIG. 5

236 INTENSIFICATION OF THE HARDENING OF ASBESTOS CEMENT ARTICLES BY A PRELIMINARY HYDRATION OF PORTLAND CEMENT. B. F. Fedoryakun. Trudy, Gos. Vses. in-t po proektir. i nauchno-issled. rabotan, "Yuzhgiprotsement", 1964, sb.6, 73-86; Ref.Zhur.Khim. 1964, 20M157.

A preliminary hydration of portland cement by additional vibrational milling with the addition of 60% of water (based on the weight of the cement) improves the quality of asbestos cement articles. The higher is the chemically-bonded water content of the starting portland cement, the stronger are the asbestos cement products. Apart from improving the mechanical properties of the products, the preliminary hydration increases the rate of the evolution of the heat during the hardening process.

237 PRIORITY FOR PROGRESSIVE ECONOMICAL MATERIALS. D. M. Chudnovskii and V. A. Lukashevich. Stroit.Mat.1964, 10, No.4, 13-16.

Problems of structural materials are discussed in connection with the new five-year plan. Asbestos cement slate should be replaced, to a considerable extent, by standardised large corrugated plates of the length of 3.3 m. Also the production of wall tiles should be increased. Asbestos cement pipes, especially those of the diameters of 150 to 600mm are very economical and, therefore, their production should be increased. There is an increasing demand for no-pressure or low-pressure asbestos cement pipes for drainage and sewage. The production of asbestos cement pipes should be differentiated according to the working pressures. The production of asbestos cement pipes should reach in 1970 60-70,000 km.

238 DUTCH PATENT 6,404,506. COATING COMPOSITIONS. I.C.I. Ltd.

Organic polymer coatings with a textured or crude finish contain 5-80% of inert organic polymer granules, such as polyethylene, polypropylene, polyvinyl chloride or an acrylic resin. In an example, an asbestos cement layer was primed with s solution of chlorinated rubber in an organic solvent, and then dispersion of 10% polyethylene granules in a pigmented aqueous dispersion of polyvinylacetate was applied onto the primed asbestos-cement. After drying, a coating was obtained with a pleasant, evenly textured finish.

ASARCO ALV 0006096

239 RUSSIAN PATENT 167,760. PRODUCTION OF ASBESTOS CEMENT ARTICLES. I. I. Bernei.

A process for the production of asbestos cement plates is described, which comprises stacking freshly prepared plates with suitable insertions between them, and subjecting the piles to a pressure of 12-15 kg/cm^2 for 3-4 hours until the asbestos cement begins to set.

240 BELGIAN PATENT 649,810. MANUFACTURE OF ASBESTOS CEMENT PRODUCTS. J. A. Kyriazi.

This process involves loading asbestos fibres with magnetisable particle and subjecting them, in the course of manufacture, to a magnetic field. The load particles can be of magnetite. Alternatively, oxides of magnetisable metals can be precipitated on the fibres and rendered magnetic by heat treatment.

241 BELGIAN PATENT 650,030. COMPOSITIONS CONTAINING FIBRES, HYDRAULIC CEMENT AND SILICA. Johns-Manville Corp.

Products, such as asbestos cement pipes, are hardened under the action of steam, at a pressure of 80 psi, and water which is injected into the chamber in such a way that it is temporarily in contact with the asbestos cement. Water is preferably at the same temperature as the steam. The process is carried out for about six hours.

242 GERMAN PATENT 1,155,049. FELTS FOR MACHINES FOR THE MANUFACTURE OF BOARDS AND TUBES OF ASBESTOS CEMENT OR THE LIKE. Aurelio Zatti. Inst. Paper Chem. Abst.Bull. Oct. 1964, 35, No.2, p. 357.

PART 3. ASBESTOS TEXTILES.

243 GERMAN PATENT 1,168,012. PRODUCTION OF ASBESTOS THREAD. W. Wilke and H. Fetzer.

In the production of a strong, chemically treated asbestos thread, Canadian 3R asbestos fibre is dispersed in a water solution of alkylarenesulfonate, sodium oleate, and a stearate soap. The suspension is diluted to an asbestos/water ratio of about 1/50 and homogenized. The homogeneous mixture is passed through a nozzle along with an aqueous solution of aluminium sulfate to precipitate aluminium stearate in the threads, whereby the threads are strengthened for processing into yarn and spinning.

ASARCO ALV 0006097

PART 4. FRICTION MATERIALS.

244 CANADIAN PATENT 693,430. FRICTION MATERIAL. Raybestos Manhattan Inc.

A method of making binder-containing composition materials comprises saturating a dried, wet-felted fibrous board with a liquid heat-hardenable binder, partially curing and drying the binder in the board at a temperature of between about 150°F. to 180°F. to a volatile content between about 2 to 10 per cent by weight of the board, subjecting said precured board in an unheated condition to densifying pressure ranging between 1 and 15 tons per square inch, and thereafter substantially completely curing said board in an unconfined state.

245 DESIGN FORMULAS FOR FLOATING-SHOE BRAKES & CLUTCHES. M. F. Spotts, Product Engineering 28-9-1964, 84 pp.

These new quotations for the floating shoe or Huck brake quickly give relationships between actuating force and reaction torque for various coefficients of friction of brake linings.

246 IMPROVED BRAKING SYSTEM FOR B.M.C. CARS WITH 6-CYLINDER ENGINES. Automobile Engineer, August 1964, pp.355-357.

The inertia control valve and self adjusting drum brakes are dealt with in some detail.

247 DESIGN AND OPERATION OF FRICTION CLUTCHES. H. C. Town. Eng. Materials and Design, Feb. 1965, pp. 102-7.

After defining the clutch and the 3 laws relating to the friction of dry surfaces, this article surveys the various forms of friction clutch in use, giving examples of design, considerations and calculations and practical applications.

248 FILLED PTFE AS BEARING MATERIAL. J. R. F. Cornell. Applied Plastics 8.1, Jan. 1965, pp.30-2.

The processing and applications of PTFE filled with silica, glass, asbestos, graphite, bronze, stainless steel, molybdenum and mica are discussed.

249 ADHESIVES IN THE MOTOR INDUSTRY. E. H. Walton. Assembly & Fastener Methods, 1964.

Examples of adhesive usage for mechanical components are in the bonding of brake linings to shoes and attachment of gaskets to tappet covers.

ASARCO ALV 0006098

250 DOUBLE BRAKE-LINING LIFE. Machine Design 3, 12, 1964, p.26.

Double brake-lining life and improved fade resistance resulted when a disc brake used in 1964 Indianapolis 500 race was coated with a composite material called DiPaC. DiPaC is said to be a copper/silicon carbide that is a true composite giving high thermal conductivity and good wear resistance at less cost than equivalent electroplatings.

251 BRITISH PATENT 967,408. ARRANGEMENTS OF DISC BRAKES. Girling Ltd.

PART 5. REINFORCED PLASTICS.

252 BRITISH PATENT 986,161. ASBESTOS FILLED VINYL RESIN COMPOSITIONS. Ferro Corp.

253 THE EFFECT OF FILLERS ON PHYSICO-MECHANICAL PROPERTIES OF POLYPROPYLENE. I. I. Farberova et al. Plasticheskie Massy, 1964, No.10, 62-64.

Properties of polypropylene compositions containing powdered fillers (carbon black, talc, titanium dioxide) and fibrous fillers(short asbestos fibres, glass fibres) have been investigated.

254 GERMAN PATENT 1,174,500. CURABLE HIGH-MOLECULAR-WEIGHT CONDENSATION PRODUCTS. Siemens-Schuckertwerke.

These are produced by the condensation of mono-or polyhdric, alkylated phenols with calcium cyanamide. The product is a viscous resin which is curable. The resin may be filled with titanium dioxide, clay, iron oxide, graphite, asbestos or glass fibres, flake or powdered mica, or organic fillers. The product is useful as a moulding or casting plastic, as a varnish base, for coatings and adhesives, and for heat-resistant electrical applications.

255 FRENCH PATENT 1,367,378. FIBRE-REINFORCED PLASTIC ARTICLES. E. H. Begemann.

These are produced from moulding resinous preparations reinforced with fibres of specified dimensions. An injection machine is used connected with a mixer provided with a helical ribbon-type blade. In example, to a resinous mixture consisting of 70% thermosetting polyester and 30% thermoplastic polyester is added benzoyl peroxide and asbestos powder(125%) and glass fibres(35%, all percentage with respect to the weight of the resin mixture).

ASARCO ALV 0006099

256 GERMAN PATENT 1,184,953. IMPROVING THE FLOW PROPERTIES OF POLYESTER COMPOSITIONS HAVING LARGE CONTENTS OF FILLERS. Henkel & Cie.

This invention relates to polyester-base compositions, useful as moulding preparations, adhesives, sealing agents or primers, which comprise unsaturated polyesters, co-polymerisable monomers such as e.g. styrene, catalysts and a large amount of fillers, such as quartz flour, talc, asbestos, inorganic pigments (e.g. titanium dioxide) and the like.

257 PRELIMINARY PROCESSING OF ASBESTOS USED AS A FILLER FOR PLASTICS AND ITS SORPTIVE PROPERTIES. A. B. Davidov and Z. G. Ivanova. Plasticheskie Massy, 1965, No.1, 46-48.

Processes of sorption and chemisorption of a resin by asbestos used as a filler and the influence of a preliminary treatment of asbestos on these phenomena have been investigated. Preliminary treatments applied included mechanical processing (milling in a ball mill and a vibro-mill), thermal treatment and swelling in water. As a plastic material, a polymethylphenylsiloxane resin (K-9) was used. Also the sorption of monomeric tetraethoxysilane was studied. Milling in a ball mill resulted in a considerable increase in the swelling ability of asbestos(in water). Thermal treatment (heating at 450°C for 24 hours) substantially increased the surface activity of asbestos. The sorption of the monomeric tetraethoxysilane was studied. The sorption of the monomeric tetraethoxysilane was much higher than that of the resin K-9, apparently because of the penetration of the monomeric into the pores in asbestos. Soft asbestos had a higher sorption ability than hard asbestos.

PART 6. PLASTIC BUILDING MATERIALS AND PIPES.

258 FRENCH PATENT 1,364,981. DECORATIVE PANELS, Dow Corning Cp.

Decorative laminate panels, having heat - and sound - insulating properties, consists of a fibrous mat which strongly adheres to a resinous film which, in turn, adheres to a glass fabric. The fibrous mat may consist of glass fibres, or asbestos, or cellulosic fibres etc., and is impregnated with a phenolic resin.

259 HARDBOARDS: III. INORGANIC AND MISCELLANEOUS BOARDS. Jack Weiner & Jerry Byrne. Institute of Paper Chemistry Bibliography Series 1964, No.2II, 138p.

Part III covers such materials as gypsum board, plaster board, asbestos board,hardboard-plywood laminates and related products.668 refs.

ASARCO ALV 0006100

260 CANADIAN PATENT 684,493. SULPHUR-TREATED ASBESTOS AND COLOUR-STABILIZED, TILE-MAKING MIXTURE CONTAINING THE SAME. Union Carbide Corp.

In the production of a fibrous asbestos product suitable for use in the production of resin-base tiles, opened asbestos fibres are treated with sulphur dioxide at an elevated temperature until the fibres contain up to 3% of sulphur chemically combined with asbestos.

261 GERMAN PATENT 1,158,430. MORTARS FOR TILES FROM PORTLAND CEMENT, METHYLCELLULOSE AND OTHER INGREDIENTS. The Council of America.

A mortar used for fixing tiles to e.g. walls, comprises 24.8-89.9 wt.% portland cement, 0.2-6.5% methylcellulose and 10-75% of additives such as sand, limestone, asbestos powder, plasticisers(e.g.glycerol etc. Examples relate to fixing tiles or mosaics to gypsum walls.

262 CANADIAN PATENT 690,395. RESIN AND FILLER COMPOSITION. United States Plywood Corp.

In the production of fiberised veneer filling composition having improved characteristics, a mixture of a liquid phenolic resin, an emulsified petroleum wax and sawdust is warmed and tumbled together. Then about 2.5-5% of 7-D chrysotile asbestos fibre is added and the mixing is continued to obtain a homogeneous mass. This filler is useful for smoothing voids and other defects.

263 BITUMEN, A VERSATILE MATERIAL FOR THE INDUSTRY AND FOR STRUCTURAL PURPOSES. E. Gundermann, Technik, 1964, 19, No.1, 32-37.

Classification of bituminous materials and their properties are briefly described. The following fields of the application of bitumen are discussed: paper and linoleum industry, rubber production, electrotechnique, pipe production (micro-asbestos can be used as a filler for expanded bitumen corrosion-preventive coatings, asbestos paper impregnated with bitumen is used as an insulating material), protection against attack by acids (micro-asbestos and asbestos flour can be used as fillers for bitumen coatings, e.g. for floors, container walls etc.), shipbuilding, lacquer industry, steel construction (asbestos flour in protective bitumen coatings), roofings, sound- and heat-insulations, and other structural applications, in which bitumen is used with various particulate or fibrous reinforcing agents.

ASARCO ALV 0006101

264 SYNTHETIC FLOORINGS FROM COUMARONE PLATES. Byull.Stroit. Tekhn., 1964, No.12, 23.

Coumarone resin-base floor tiles made of cheap materials, have good heat-insulating properties, can replace, at lower prices, wooden floorings in dwelling houses and industrial buildings. Their hardness is at least 4.5 kg/mm^2, water absorption less than 1%, heat resistance not less than 80°C tensile strength not less than 60 kg/cm^2, flexural strength not less than 100 kg/cm^2, wearing not more than 0.1mm. They are made from coumarone resins, plasticisers, short asbestos fibres, talc and pigments.

265 JAPANESE PATENTS 12457-9/64. STABILIZATION OF CHLORINE-CONTAINING POLYMERIC MATERIALS. T. Itoh.

Chlorine-containing polymeric materials, such as polyvinyl chloride, polyvinylidene chloride, chlorinated polyolefines or the like, which contain larger quantities of fillers, such as asbestos, calcium carbonate, mica, etc., are protected against discolouration, caused by heat and/or light in the presence of metallic impurities such as iron, aluminium or zinc present in the filler, by the addition of 0.5 - 20 parts of a complex compound of boron per 100 parts of the polymeric material.

266 PVC MAIN BENEATH THE ARUN. Int.Pipes & Pipelines,Mar.'65,p.42.

When it was discovered recently that the 2 in.diameter steel water main crossing the river Arun at its mouth at Littlehampton had corroded, Mr.H.A.Leader,A.M.I.C.E.,A.M.I.W.E.,water engineer,Worthing Corporation, was confronted with a considerable problem. The River Arun is reputed to be the second fastest flowing river in England and the water main had to be replaced. It was decided to use PVC,because of its corrosion resistance to sea water of both the pipe and its joints and also because its light weight and flexibility would enable continuous lengths to be jointed on the surface and then placed in position without difficulty at a later stage.

PART 7. ASBESTOS JOINTING, PACKING ETC.

267 CANADIAN PATENT 694,291. GASKET MATERIALS. Johns-Manville.

A sealing material for the production of improved gaskets is prepared from a mixture of asbestos floats, a rubbery butadiene-acrylonitrile copolymer, a tetrafluoroethylene polymer, and usual pigments, vulcanising agents, plasticisers and the like. After processing the mixture is formed into sheets, or the like, by extrusion, calendering etc.

ASARCO ALV 0006102

268 RUSSIAN PATENT 162,612. PREPARATION OF MASTICS. L. T. Ivanov.

In mastics according to the invention, residues obtained during the rectification of crude petrol are utilized as a dilutent. The mastics are based on bituminous binders and asbestos flour as a filler. The composition is as follows: bitumen BN-IV-V 30%, rectification residues 41.5%, asbestos flour 28.5%. The mastics do not need heating before application; they are suitable, for instance, for gluing rubber-base roofing materials, such as "Brizol" or "Izol", to various supports.

269 CZECHOSLOVAKIAN PATENT 108264. METHOD OF THE PRODUCTION OF FILLED ASPHALT, SEALING PREPARATIONS, MASTICS AND SIMILAR INSULATING MATERIALS. V. Benes and L. Kubanek.

A process is described characterised in that, instead of usual two stages, viz., the melting of the solid material and mixing it with the fillers, the oxidation of the starting bitumen or pitch is carried out after the addition of inorganic or organic fillers, such as fibrous asbestos, limestone, clay, ground rubber, latex or other additives. For instance, semi-liquid bitumen, having a softening point of 20-40°C and containing 15% of a filler, can be oxidised at a temperature of 200-260°C, whereby its softening temperature increases to 65-75° and more. During the process, the duration of which is 6-10 hours, the filler is uniformly distributed throughout the bitumen, and a homogeneous internal structure is formed, improving the mechanical properties of the material and its resistance to heat and atmosphere influence.

270 FRENCH PATENT 1,386,830. PROTECTIVE COATINGS. Peintures & Vernis de la Mediterannee, S.A.

Protective coatings for contact surfaces of containers made of wood and iron are produced from mixtures of polyester resins containing an OH group, methyl-isobutyl-ketone cellulose acetate, acetic ester of monoethyl ether of ethylene glycol, silicon carbide, asbestos, silica, iron oxide, polyisocyanate and xylene.

271 BELGIAN PATENT 651,899. SHEETS OF LAMINATED MATERIAL. Philip Carey Manufacturing Co.

Material, which can be used as a barrier to steam, comprises a layer of bituminous mastic interspersed between two layers of bitumen-impregnated asbestos.

ASARCO ALV 0006103

PART 8. ASBESTOS PAPER, HEAT INSULATING MATERIALS.

272 NETHERLANDS APPLICATION 6,406,190. SOUND-INSULATING AND SEALING MATERIALS. Matec-Holding A.G.

Sound-insulating and sealing materials, particularly for car bodies, comprise a bituminous base and a filler having magnetic properties. In an example, an oxidised bitumen R85/25 (a softening point of 85°C and a penetration of 25) was heated for 40-60 mins. at 200°C with 5% of a low-molecular-weight butyl rubber. Fillers consisting of 50 wt.% barium ferrite and 10 wt.% of asbestos fibres were admixed, and the mixture was formed into sheets.

273 JAPANESE PATENT 29780/64. HEAT INSULATING PLATE. Showa Denko K.K.

A heat insulating plate for use in e.g. electric furnaces is prepared from lump asbestos, a small amount of a binder, and calcium hydroxide. The mixture is kneaded and spread on the surface of a support, such as a wire net. The assembly is gradually dried at a room temperature.

274 FRENCH PATENT 1,375,932. ASBESTOS-CERAMIC MATERIAL. J. Duperray.

A composite material consisting of an agglomerate of asbestos and enamel or ceramic products is vitried by firing at a temperature below 1000°C. Thin, flat or shaped plates or tiles may be produced from this material for use as protective coverings and decoration on the construction of buildings etc. They may also be used as the bottom of built in drains.

275 BRITISH PATENT 949329. PIPE INSULATION. Bells Asbestos & Engineering Ltd.,Slough. (International Pipes & Pipelines, March 1965, p.48.)

Pipe insulation, made in long sheet form with flat pyramid faces on the inside, so that it can be bent round any desired curved pipe diameter, or there can be longitudinal grooves on the inside. The insulation is made from foamed polyurethane backed by PVC cover sheeting, which is easy to seal at the wrap-around joint.

276 JAPANESE PATENT 131/65. WATER-PROOF PAPER FOR CONCRETE STRUCTURES. Mitsubishi Yuka Co.

Water-proof papers for concrete structures consist of various combinations of asbestos paper with films of polyethylene or vinylidene chloride copolymers or of butadiene synthetic rubber.

ASARCO ALV 0006104

277 JAPANESE PATENT 21539/64. INORGANIC FIBRE BOARDS. Nippon Asbestos Co.

Boards are produced by mixing powdered silicic acid and lime with inorganic fibres, such as asbestos or rock wool, adding water, stirring to form a slurry, heating the slurry to gel it, forming a board, steaming it and drying.

278 CANADIAN PATENT 693,548. WATER-LAID INORGANIC PRODUCTS. Armstrong Cork Co.

Production is described of a fibre-reinforced, water-laid product from fast-draining slurries on a Fourdrinier wire-machine, cylinder machine or the like. In an example, 40 parts of 5D chrysotile asbestos fibre was added to 4000 parts of water; after a thorough beating, 40 parts of kaolin or diatomite and 80 parts of a 16.1% solution of dimed acid soap were added. The slurry drained much more rapidly than in the dimer soap. The resulting sheet was air dried to obtain a strong product. When kaolin is used the product can be fired to form a fused, strong, hard, ceramic sheet.

279 FRENCH PATENT 1,383,397. CELLULAR INSULATING MATERIAL. Turner Bros. Asbestos Co.

Low-density, cellular material for use in thermal or accoustical insulations is produced by preparing an aqueous dispersion of asbestos fibres, optionally containing other fibres, with the addition of precipitable, surface-active substances which may act as binders. A coagulating agent is then added to the suspension to precipitate the binder onto the fibres. The mixture is transferred to a mould, dried and baked at an elevated temperature.

280 GERMAN PATENT 1,181,904. USE OF CROSSLINKED POLYURETHANES FOR INSULATING PURPOSES AT TEMPERATURES ABOVE 1650°C. Thickol Chemical Corp.

It has been found that polyurethanes acquire a high heat resistance when combined with 7 - 60 wt.% of heat-resistant fillers and cross-linking agents, such as triisopropylamine, castor oil etc. In an example, 100 parts of a urethane prepolymer were mixed with 30 parts of crocidolite for 40 - 60 mins. and 3 parts of triisopropylamine. The curing temperature was about 150°C. In other examples, chrysotile asbestos was used.

ASARCO ALV 0006105

PART 9. REFRACTORY FIBRES.

281 RUSSIAN PATENT(INVENTOR'S CERTIFICATE) 160,829. METHOD OF GROWING WHISKERS OF GERMANIUM OR SILICON FROM THE VAPOUR PHASE. A. V. Sandulova et al.

Whiskers of germanium or silicon are produced by reacting Ge or Si with bromine at a temperature of 850-900°C or 1150°C respectively, and decomposing the bromide in the crystallisation zone at a temperature of 600°C or 850-900°C respectively. The pressure in the crystallisation zone is maintained at 3 - 4 atm. Whisker crystals of a diameter of 1-20 microns are obtained.

282 SILICON CARBIDE WHISKERS. H. P. Kirchner and P. Knoll. J.Amer.Ceram.Soc., 1963, 46, No.6, 299-300.

The pyrolysis of CH_3SiCl_3 in a hydrogen stream at 1400° yields at the beginning of the cooling zone needlelike hexagonal crystals of alpha-SiC, having a diameter of 1 to 5 microns and a length of 1-1.5cm (at the end of the cooling zone, cubic beta-SiC crystals are formed). Electrical and mechanical properties of the SiC whiskers have been studied.

283 FIBRE METALLURGY. M. Lorant. Werkstoffe and Korrosion, 1964, 15, No.4, 313-315.

The Armour Research Foundation of the Illinois Institute of Technology developed a new technique, "fibre metallurgy", for the preparation of felted and sintered metal fibre bodies useful in filtering, sound-insulation and other special applications. Fibres of metals, e.g. aluminium can be produced by cutting. Their diameter is of 0.025 to 0.5mm; the length of the fibres is 0.75 - 25mm. The porosity of the product can be varied between 5% and 97% depending on the production methods.

284 INSULATION MATERIALS FOR HIGH TEMPERATURES. Mat. in Design Eng. September 1964, p.25. Available from Office of Technical Services, Dept. of Commerce, Washington, D.C.20230, Ø3 (AD 420 193).

In reviewing insulation materials for high temperatures, this report found that graphite fibres are stable to 4000 F in vacuum systems, but deteriorate at increasing rates as the pressure of oxidizing gases increases.

285 BRITISH PATENT 978,790. GROWTH OF METAL FIBRES. Gen.Elec.Co.

This invention relates to improved processes and apparatus for producing metal single crystals.

ASARCO ALV 0006106

286 FRENCH PATENT 1,367,544. METALLIC STRUCTURAL MATERIAL. National Research and Development Corp.

A structural material comprises a metallic matrix of a relatively low mechanical strength and a reinforcing component of a high strength consisting of fine metallic wires or filaments embedded in the matrix.

287 JAPANESE PATENT 28545/64. BERYLLIUM OXIDE FILAMENTS. National Beryllia Corp.

Beryllium oxide filaments are produced by comminuting a mixture of BeO with 0.2-5 wt.% of Al_2O_3, MgO or SiO_2 as a binding agent for BeO, mixing 50-75 wt.parts of the powder with a gel solution containing 25-50 wt. parts of an organic polymer, as a temporary binding agent: forming coagulated filaments from the paste obtained(by extrusion : and baking the filaments on a refractory support at temperatures from 1000 to 1900°C to remove the temporary organic binder and consolidate the filament.

PART 10. MISCELLANEOUS.

288 THE EFFECT OF DEHYDRATION ON THE PROPERTIES OF CHRYSOTILE ASBESTOS. A. S. Ognev. Nauchn. tr. Vses. n.-i in-t asbest. prom - sti, 1962, No.3, 56-61; Ref.Zhur.Khim., 1964,4[illegible].

Chrysotile asbestos was heated at temperatures from 100 to 700°C for 10 mins. and 2 hours. The heating weight losses and the reverse absorption of water on a 5-day exposure to air were determined. It was found that heating to 100°C removes only hygroscopic moisture (0.3 - 0.4%). The bulk of absorbed water (1.2 - 1.3%) is removed upon heating for two hours of 400 - 420°C. This process adversely affects the physico-mechanical properties of the fibres and increases tendency to splitting. The removal of structural water occurs at 700 - 720°C and results in disintegration of the fibre structure and a complete loss of strength. The reverse absorption of moisture by calcined asbestos fibres exposed to air is small; it amounts to 0.3 - 0.4% only. Thus the process of the dehydration of asbestos is mainly irreversible.

289 JAPANESE PATENT 23841/64. ASBESTOS ROLL. Central Glass Company.

An asbestos roll for producing flat glass is made by compressing together groups of asbestos discs provided with a central hole for the shaft and driving nails through them to connect adjacent disc groups. The assembly is then pressure-moulded.

ASARCO ALV 0006107

290 SYNTHESIS AND INVESTIGATION OF THE PROPERTIES OF FIBROUS MINERALS OF AMPHIBOLE ASBESTOS TYPE. A. D. Fedoseev et al. Sb."Silikaty i okisly v khimii vysokikh temperatur. M.1963,180-190: Ref.Zhur.Khim., 1965, 2M204.

Conditions of the formation of fibrous amphiboles from silicate melts have been investigated. The attempted synthesis of fluorocupferrite and fluoro-tremolite from the corresponding oxides and fluorides yielded only needle-like crystals of fluorine-containing amphibole, pyroxenes and glass. Better results have been obtained by the addition of fluxes ($NaCl$, Na_2CO_3, Na_2SiF_6) and gas-evolving materials (sawdust). In this way, synthetic fibrous fluoro-magnesian richterite was obtained. Physico-chemical properties of this material was described.

291 HYDROTHERMAL SYNTHESIS OF FIBROUS SILICATES. A.D.Fedoseev et al. Sb."Silikaty i okisly v khimii vysokikh temperatur", M.1963, 198-207: Ref.Zhur.Khim., 1965, 2M205.

Fibrous serpentine corresponding to chrysotile was produced under hydrothermal conditions by subjecting a mixture of water glass and magnesium hydroxide, in an alkaline medium having pH9, to a temperature of 350 - 450°C at a pressure of about 900 atm. for 48 hours. The fibrous mass obtained consisted of filaments or fibres agglomerated in bundles, bunches or forming radial agglomeration. The length of the fibres was up to 0.2 mm., their thickness about 0.1 micron. The fibres were not destroyed by boiling in water, concentrated HCl and ZN-NaOH solutions.

292 CHLORINE DERIVATIVES OF KAOLIN AND CHRYSOTILE ASBESTOS. E. V. Kukharskaya, Yu. I. Skorik and K. G. Gileva. Doklady Akad. Nauk,SSSR, 1964, 158, No.2, 393-6.

Kaolin and chrysotile asbestos were subjected to the action of chloride resulting in the following superficial reaction:

$$Si - OH + SOCl_2 \qquad Si - Cl + SO_2 + HCl$$

The reaction was enhanced by the use of u.v. radiation. Chrysotile asbestos was chlorinated in the surface only: the fibres were virtually intact and preserved all their mechanical properties. The Si - Cl bond could be hydrolysed only on a prolonged heating.

293 INDIAN PATENT 84725. DEFIBERISATION OF ASBESTOS. Smith & Co. A/S.

A process is described comprising continuously working up in a rod mill a mixture of asbestos and 15 to 25% water.

ASARCO ALV 0006108

294 THE HYDROLISIS OF SALTS FROM ASBESTOS. S.G.Ovchinnikov, V. P. Shitikov and N. A. Mantseva. Nauchn.tr.Vses.n.-i. in-t. asbest. prom-sti. 1963, No.4, 91-101: Ref.Zhur.Khim, 1964, 8M211.

Apparatus and procedure are described for an automatic recording of the electroconductivity of a suspension of asbestos (B/T = 15) as a function of the time of hydrolysis, at different temperatures. The potential at the electrodes is constant (about 24v). At first, the electroconductivity increases sharply, then it approaches a constant value. When asbestos is previously heated to 200°C, the concentration of the ions in the electrolyte decreases, but when heating is 550-600°C is applied, the ion concentration sharply increases again. It is of interest, that the curve for asbestos heated at 300°C is not asymptotic. The aqueous extracts from asbestos heated at various temperatures were analysed. Heating at 200°C, resulted in an increase in calcium contents - presumably as a result of the decomposition of $Ca(HCO_3)_2$. When samples of asbestos were heated with sulphur and chloranil, the electroconductivity of the suspension of these samples was high, indicating that an interaction of these substances with asbestos took place during the heating.

PART 11. REVIEW OF JOURNALS.

"ASBESTOS", January 1965.
807 Western Saving Fund Bldg., Philadelphia, Penn. 19107.

295 GREETINGS - (REVIEW OF INDUSTRY), p.2.
296 WILSON DAVIS(U.S.ASBESTOS COMPANY), p.16.
297 BUILDING, p.24.
298 MARKET CONDITIONS, p.30.
299 PRODUCTION, p.32.
300 IMPORTS & EXPORTS, p.34.
301 INDUSTRY NEWS, p.38.
302 ASBESTOS PRICES, p.44.
303 PATENTS, p.48.

"ASBESTOS", February 1965.

304 ASSOCIATIONS, p.2.
305 SASKATCHEWAN SURVEY, p.24.
306 C. V. SMITH - DECEASED, p.26.
307 AUTOMOBILE SALES, p.28.
308 BUILDING, p.30.
309 MARKET CONDITIONS, p.34.
310 PRODUCTION, p.36.
311 IMPORTS & EXPORTS, p.38.
312 INDUSTRY NEWS, p.40.

ASARCO ALV 0006109

THE NEW YORK ACADEMY OF SCIENCES

(Founded in 1817)

BOARD OF TRUSTEES

J. JOSEPH LYNCH, S. J., *Chairman of the Board*

Class of 1963-1965

HILARY KOPROWSKI — HARDEN F. TAYLOR — G. W. MERCK

Class of 1963-1966

W. STUART THOMPSON — EDMUND J. BLAKE, JR. — HUGH CULLMAN

Class of 1965-1967

HENRY C. BRECK — LEON SHIMKIN — LOWELL WADMOND

Class of 1965-1968

GORDON Y. BILLARD — FREDERICK A. STAHL — BORIS PREGEL

EMERSON DAY, *President of the Academy*
J. JOSEPH LYNCH, S.J., *Past President*
CHARLES W. MUSHETT, *Past President*
EUNICE THOMAS MINER, *Executive Director*

SCIENTIFIC COUNCIL, 1965

EMERSON DAY, *President*
JACOB FELD, *President-Elect*

J. J. BURNS, *Vice-President* — MINORU TSUTSUI, *Vice-President*

ANDRES FERRARI, *Recording Secretary* — ROSS F. NIGRELLI, *Corresponding Secretary*

Elected Councilors

RHODES W. FAIRBRIDGE	1963-1965	L. WILLIAM MAX
ALBERT S. GORDON	1964-1966	WALTER E. TOLLES
N. HENRY MOSS	1965-1967	H. CHRISTINE REILLY

EUNICE THOMAS MINER, *Executive Director*

SECTION OF BIOLOGICAL AND MEDICAL SCIENCES

GABRIEL G. NAHAS, *Chairman* — HERMAN COHEN, *Vice-Chairman*

DIVISION OF ANTHROPOLOGY

JEROME BRIGGS, *Chairman* — ANNEMARIE DE WAAL MALEFIJT, *Vice-Chairman*

DIVISION OF INSTRUMENTATION

CARL BERKLEY, *Chairman* — E. E. SUCKLING, *Vice-Chairman*

DIVISION OF MICROBIOLOGY

EUGENE L. DULANEY, *Chairman* — EUGENE R. L. GAUGHRAN, *Vice-Chairman*

DIVISION OF PSYCHOLOGY

JOSEPH F. KUBIS, *Chairman* — VIRGINIA STAUDT SEXTON, *Vice-Chairman*

DIVISION OF ENVIRONMENTAL SCIENCES

IRVING J. SELIKOFF, *Chairman* — E. CUYLER HAMMOND, *Vice-Chairman*

SECTION OF CHEMICAL SCIENCES

EMIL J. MORICONI, *Chairman* — ROBERT ROUSE, *Vice-Chairman*

DIVISION OF BIOCHEMISTRY

PAUL GREENGARD, *Chairman* — BERT N. LA DU, JR., *Vice-Chairman*

DIVISION OF ORGANOMETALLIC CHEMISTRY

WILLIAM J. CONSIDINE, *Chairman* — MINORU TSUTSUI, *Vice-Chairman*

DIVISION OF POLYMER SCIENCE

FRANCIS MICHELOTTI, *Chairman* — E. H. IMMERGUT, *Vice-Chairman*

SECTION OF GEOLOGICAL SCIENCES

LEWIS G. WEEKS, *Chairman* — BRUCE C. HEEZEN, *Vice-Chairman*

SECTION OF PHYSICAL SCIENCES

MORRIS H. SHAMOS, *Chairman* — BERNARD KRAMER, *Vice-Chairman*

DIVISION OF BIOPHYSICS

ROSALYN YALOW, *Chairman* — IRA PULLMAN, *Vice-Chairman*

DIVISION OF ENGINEERING

I. B. LASKOWITZ, *Chairman* — JULIAN D. TEBO, *Vice-Chairman*

DIVISION OF MATHEMATICS

AUBREY W. LANDERS, *Chairman* — CHARLES LEWIS, S.J., *Vice-Chairman*

SECTION OF PLANETARY SCIENCES

HAROLD L. STOLOV, *Chairman* — RICHARD M. SCHOTLAND, *Vice-Chairman*

The Sections and Divisions hold meetings regularly, one evening each month, during the academic year, October to May, inclusive. All meetings are held at the building of The New York Academy of Sciences, 2 East Sixty-third Street, New York, New York 10021.

Conferences are also held at irregular intervals at times announced by special programs.

ASARCO ALV 0006110

ANNALS OF THE NEW YORK ACADEMY OF SCIENCES

VOLUME 132, ART. 1 PAGES 1-766

December 31, 1965

Editor HAROLD E. WHIPPLE

Associate Editor PAUL E. VAN REYEN

BIOLOGICAL EFFECTS OF ASBESTOS*

Conference Cochairmen

I. J. SELIKOFF J. CHURG

CONTENTS

Preface. *By* EUNICE THOMAS MINER 5

Opening Remarks. *By* IRVING J. SELIKOFF 7

Man and Asbestos. *By* J. C. GILSON 9

SECTION I. ASBESTOS MATERIALS IN MODERN TECHNOLOGY

The Geology, Occurrences, and Major Uses of Asbestos. *By* N. W. HENDRY .. 12

The Physical and Molecular Structure of Asbestos. *By* RICHARD GAZE 23

Chemical Studies of Asbestos. *By* J. S. HARINGTON 31

SECTION II. LUNG TISSUE AND MINERAL MATTER: PROBLEMS OF PATHOGENESIS

The Detection and Localization of Mineral Fibers in Tissue. *By* C. BERKLEY, J. CHURG, I. J. SELIKOFF AND W. E. SMITH 48

Some Observations of the Dust Content and Composition in Lungs with Asbestosis, Made During Work on Coal Miners Pneumoconiosis. *By* G. NAGELSCHMIDT 64

Asbestos Dust Deposition and Retention in Rats. *By* J. C. WAGNER AND J. W. SKIDMORE 77

Experimental Asbestosis with Four Types of Fibers: Importance of Small Particles. *By* P. F. HOLT, J. MILLS AND D. K. YOUNG 87

Electron-Microscope Studies of Asbestosis in Man and Animals. *By* J. M. G. DAVIS 98

Rheumatoid Factor in Serum of Individuals Exposed to Asbestos. *By* B. PERNIS, E. C. VIGLIANI AND I. J. SELIKOFF 112

Discussion 121

SECTION III. HUMAN EXPOSURE TO ASBESTOS: INDUSTRIAL POPULATIONS

Asbestosis in Great Britain. *By* J. C. MCVITTIE 128

The Occurrence of Asbestosis Among Insulation Workers in the United States. *By* I. J. SELIKOFF, J. CHURG AND E. C. HAMMOND 139

Mortality Among Asbestos Products Workers in the United States. *By* PHILIP E. ENTERLINE 156

Secular Changes in Asbestosis in an Asbestos Factory. *By* W. J. SMITHER 166

Discussion 182

*This series of papers is the result of a conference entitled *Biological Effects of Asbestos* held by The New York Academy of Sciences on October 19, 20, and 21, 1964 and supported in part by grant No. OH-00192-01 from the National Institutes of Health, Bethesda, Md.

ASARCO ALV 0006111

SECTION IV. HUMAN EXPOSURE TO ASBESTOS: COMMUNITY STUDIES

Occupational and Nonoccupational Exposures to Asbestos. *By* W. C. HUEPER 184

Asbestos and the Urban Dweller. *By* J. G. THOMSON 196

Asbestosis in South Africa—Certain Geographical and Environmental Considerations. *By* G. K. SLUIS-CREMER 215

Pleural Plaques and Asbestos: Further Observations on Endemic and Other Nonoccupational Asbestosis. *By* RAIMO KIVILUOTO 235

Observations on Atmospheric Air Pollution Caused by Asbestos. *By* ARVO LAAMANEN, LEO NORO AND V. RAUNIO 240

Discussion opened by G. W. H. SCHEPERS 246

SECTION V. HUMAN EXPOSURE TO ASBESTOS: DUST CONTROLS AND STANDARDS

The Inhalation of Fibrous Dusts. *By* V. TIMBRELL 255

A Comparison of Impinger and Membrane Filter Techniques for Evaluating Air Samples in Asbestos Plants. *By* HOWARD E. AYER, JEREMIAH R. LYNCH AND JULIUS H. FANNEY 274

Developments in Dust Sampling and Counting Techniques in the Asbestos Industry. *By* S. HOLMES 288

Dust Measurement and Monitoring in the Asbestos Industry. *By* C. G. ADDINGLEY 298

Measurement of Airborne Asbestos Dust by Instruments Measuring Different Parameters. *By* S. A. ROACH 306

Present Threshold Limit Value in the U.S.A. for Asbestos Dust: A Critique. *By* E. L. SCHALL 316

Economics of Dust Control. *By* D. W. HILLS 322

Discussion 335

SECTION VI. CLINICAL STUDIES OF PULMONARY ASBESTOSIS

Radiological Classification of Pulmonary Asbestosis. *By* H. BOHLIG 338

The Occurrence of Pleural Calcification Among Asbestos Insulation Workers. *By* IRVING J. SELIKOFF 351

Differential Diagnosis in the Pathology of Asbestosis. *By* J. GOUGH 368

Radiological and Pathological Correlations in Asbestosis in the Republic of South Africa and the United Kingdom. I. A Proposed Radiological Classification of Asbestosis. *By* G. K. SLUIS-CREMER AND C. P. THERON 373

II. A Preliminary Study of Observer Variation in the Classification of Radiographs of Asbestos-Exposed Workers and the Relation of Pathology and X-Ray Appearances. *By* A. CAPLAN, J. C. GILSON, K. F. W. HINSON, J. C. MCVITTIE AND J. C. WAGNER 379

Discussion opened by P. CARTIER 387

Pulmonary Function in Asbestosis: Serial Tests in a Long-Term Prospective Study. *By* MORTIMER E. BADER, RICHARD A. BADER, ALVIN S. TIERSTEIN AND IRVING J. SELIKOFF 391

Routine Lung Function Studies on 830 Employees in an Asbestos Processing Factory. *By* ROSS HUNT 406

The Discriminant Value of Pulmonary Function Tests in Asbestosis. *By* M. L. THOMSON, ANNE-MARIE PELZER AND W. J. SMITHER 421

Discussion opened by J. L. WHITTENBERGER 437

SECTION VII. ASBESTOS AND NEOPLASIA: EXPERIMENTAL

Studies of Carcinogenesis of Asbestos Fibers and Their Natural Oils. *By* J. S. HARINGTON AND F. J. C. ROE 439

Copyright, 1965, by The New York Academy of Sciences. All rights reserved. Except for brief quotations by reviewers, reproduction of this publication in whole or in part by any means whatever is strictly prohibited without written permission from the publisher.

ASARCO ALV 0006112

'DIES
HUEPER 184
..... 196
Consid-
..... 215
d Other
..... 235
y ARVO
..... 240
..... 246
STANDARDS
..... 255
ting Air
. LYNCH
..... 274
Asbestos
..... 288
/ C. G.
..... 298
Different
..... 306
Critique.
..... 316
.... 22
..... 335
S
..... 338
Workers.
..... 351
..... 368
ublic of
Classifi-
..... 373
ation of
athology
HINSON,
..... 379
..... 387
spective
IERSTEIN
..... 391
rocessing
..... 406
By M. L.
..... 421
..... 437
By J. S.
..... 439

served. Except
or in part by
the publisher.

Preparation of Asbestos Fibers for Experimental Use. *By* M. S. BADOLLET AND WILLIAM A. GANTT 451

Tests for Carcinogenicity of Asbestos. *By* WM. E. SMITH, LLONAS MILLER, R. E. ELSASSER AND D. D. HUBERT 456

Tests for Effect of Asbestos on Benzo[a]Pyrene Carcinogenisis in the Respiratory Tract. *By* LLONAS MILLER, WM. E. SMITH AND STEVEN W. BERLINER 489

Asbestos-Induced Tumors in White Leghorn Fowls. *By* P. R. PEACOCK AND ANDREE PEACOCK 501

Discussion 504

SECTION VIII. ASBESTOS AND NEOPLASIA: EPIDEMIOLOGY

Asbestosis and Primary Intrathoracic Neoplasms. *By* WILLIAM D. BUCHANAN 507

Neoplasia Among Insulation Workers in the United States with Special Reference to Intra-abdominal Neoplasia. *By* E. C. HAMMOND, I. J. SELIKOFF AND J. CHURG 519

Cohort Analysis of Changes in Incidence of Bronchial Carcinoma in a Textile Asbestos Factory. *By* J. F. KNOX, R. S. DOLL AND I. D. HILL 526

Pulmonary Neoplasia Among Dresden Asbestos Workers. *By* G. JACOB AND M. ANSPACH 536

Relationship Between Exposure to Asbestos and Pleural Malignancy in Belfast. *By* P. C. ELMES AND O. L. WADE 549

Association of Pulmonary Tumors with Asbestosis in Piedmont and Lombardy. *By* ENRICO C. VIGLIANI, GIACOMO MOTTURA AND PIETRO MARANZANA 558

Epidemiology of Diffuse Mesothelial Tumors: Evidence of an Association from Studies in South Africa and the United Kingdom. *By* J. C. WAGNER 575

Epidemiology of Mesothelial Tumors in the London Area. *By* MURIEL L. NEWHOUSE AND HILDA THOMPSON 579

Discussion opened by T. F. MANCUSO 589

SECTION IX. ASBESTOS AND NEOPLASIA: DIFFUSE MESOTHELIAL TUMORS

Criteria for Diagnosis of Diffuse Mesothelial Tumors. *By* W. T. E. MCCAUGHEY 603

Histological Characteristics of Mesothelioma Associated with Asbestos. *By* J. CHURG, S. H. ROSEN AND S. MOOLTEN 614

Mesotheliomatous Tumors in South Africa: Pathology and Experimental Pathology. *By* IAN WEBSTER 623

A Biopsy Series of Mesotheliomata, and Attempts to Identify Asbestos Within Some of the Tumors. *By* D. O'B. HOURIHANE 647

Mesothelial Tumors and Exposure to Asbestos Dust. *By* W. GLYN OWEN 674

Discussion opened by A. PURDY STOUT 680

SECTION X. PROBLEMS AND PERSPECTIVES

Trends in the Health of the Asbestos Worker. *By* KENNETH W. SMITH 685

The Sequelae of Exposure to Asbestos Dust. *By* J. C. WAGNER 691

Problems and Perspectives: The Changing Hazards of Exposure to Asbestos. *By* J. C. GILSON 696

Appendix 1. Report and Recommendations of the Working Group on Asbestos and Cancer 706

Appendix 2. Dust Diseases and Workmen's Compensation 722

Appendix 3. Statistical Tables—Asbestos 745

ASARCO ALV 0006113

THE NEW YORK ACADEMY OF SCIENCES

(Founded in 1817)

BOARD OF TRUSTEES

J. JOSEPH LYNCH, S. J., *Chairman of the Board*

Class of 1962-1965

HILARY KOPROWSKI — HARDEN F. TAYLOR — G. W. MERCK

Class of 1963-1966

W. STUART THOMPSON — EDMUND J. BLAKE, JR. — HUGH CULLMAN

Class of 1964-1967

HENRY C. BRECK — LEON SHIMKIN — LOWELL WADMOND

Class of 1965-1968

GORDON Y. BILLARD — FREDERICK A. STAHL — BORIS PREGEL

EMERSON DAY, *President of the Academy*
J. JOSEPH LYNCH, S.J., *Past President*
CHARLES W. MUSHETT, *Past President*
EUNICE THOMAS MINER, *Executive Director*

SCIENTIFIC COUNCIL, 1965

EMERSON DAY, *President*
JACOB FELD, *President-Elect*

J. J. BURNS, *Vice-President* — MINORU TSUTSUI, *Vice-President*
ANDRES FERRARI, *Recording Secretary* — ROSS F. NIGRELLI, *Corresponding Secretary*

Elected Councilors

RHODES W. FAIRBRIDGE	1963-1965	L. WILLIAM MAX
ALBERT S. GORDON	1964-1966	WALTER E. TOLLES
N. HENRY MOSS	1965-1967	H. CHRISTINE REILLY

EUNICE THOMAS MINER, *Executive Director*

SECTION OF BIOLOGICAL AND MEDICAL SCIENCES
GABRIEL G. NAHAS, *Chairman* — HERMAN COHEN, *Vice-Chairman*

DIVISION OF ANTHROPOLOGY
JEROME BRIGGS, *Chairman* — ANNEMARIE DE WAAL MALEFIJT, *Vice-Chairman*

DIVISION OF INSTRUMENTATION
CARL BERKLEY, *Chairman* — E. E. SUCKLING, *Vice-Chairman*

DIVISION OF MICROBIOLOGY
EUGENE L. DULANEY, *Chairman* — EUGENE R. L. GAUGHRAN, *Vice-Chairman*

DIVISION OF PSYCHOLOGY
JOSEPH F. KUBIS, *Chairman* — VIRGINIA STAUDT SEXTON, *Vice-Chairman*

DIVISION OF ENVIRONMENTAL SCIENCES
IRVING J. SELIKOFF, *Chairman* — E. CUYLER HAMMOND, *Vice-Chairman*

SECTION OF CHEMICAL SCIENCES
EMIL J. MORICONI, *Chairman* — ROBERT ROUSE, *Vice-Chairman*

DIVISION OF BIOCHEMISTRY
PAUL GREENGARD, *Chairman* — BERT N. LA DU, JR., *Vice-Chairman*

DIVISION OF ORGANOMETALLIC CHEMISTRY
WILLIAM J. CONSIDINE, *Chairman* — MINORU TSUTSUI, *Vice-Chairman*

DIVISION OF POLYMER SCIENCE
FRANCIS MICHELOTTI, *Chairman* — E. H. IMMERGUT, *Vice-Chairman*

SECTION OF GEOLOGICAL SCIENCES
LEWIS G. WEEKS, *Chairman* — BRUCE C. HEEZEN, *Vice-Chairman*

SECTION OF PHYSICAL SCIENCES
MORRIS H. SHAMOS, *Chairman* — BERNARD KRAMER, *Vice-Chairman*

DIVISION OF BIOPHYSICS
ROSALYN YALOW, *Chairman* — IRA PULLMAN, *Vice-Chairman*

DIVISION OF ENGINEERING
I. B. LASKOWITZ, *Chairman* — JULIAN D. TEBO, *Vice-Chairman*

DIVISION OF MATHEMATICS
AUBREY W. LANDERS, *Chairman* — CHARLES LEWIS, S.J., *Vice-Chairman*

SECTION OF PLANETARY SCIENCES
HAROLD L. STOLOV, *Chairman* — RICHARD M. SCHOTLAND, *Vice-Chairman*

The Sections and Divisions hold meetings regularly, one evening each month, during the academic year, October to May, inclusive. All meetings are held at the building of The New York Academy of Sciences, 2 East Sixty-third Street, New York, New York 10021.

Conferences are also held at irregular intervals at times announced by special programs.

ASARCO ALV 0006114

ANNALS OF THE NEW YORK ACADEMY OF SCIENCES

VOLUME 132, ART. 1 PAGES 1-766

December 31, 1965

Editor
HAROLD E. WHIPPLE

Associate Editor
PAUL E. VAN REYEN

BIOLOGICAL EFFECTS OF ASBESTOS*

Conference Cochairmen
I. J. SELIKOFF J. CHURG

CONTENTS

Preface. *By* EUNICE THOMAS MINER 5
Opening Remarks. *By* IRVING J. SELIKOFF 7
Man and Asbestos. *By* J. C. GILSON 9

SECTION I. ASBESTOS MATERIALS IN MODERN TECHNOLOGY

The Geology, Occurrences, and Major Uses of Asbestos. *By* N. W. HENDRY .. 12
The Physical and Molecular Structure of Asbestos. *By* RICHARD GAZE 23
Chemical Studies of Asbestos. *By* J. S. HARINGTON 31

SECTION II. LUNG TISSUE AND MINERAL MATTER: PROBLEMS OF PATHOGENESIS

The Detection and Localization of Mineral Fibers in Tissue. *By* C. BERKLEY, J. CHURG, I. J. SELIKOFF AND W. E. SMITH 48
Some Observations of the Dust Content and Composition in Lungs with Asbestosis, Made During Work on Coal Miners *Pneumoconiosis*. *By* G. NAGELSCHMIDT 64
Asbestos Dust Deposition and Retention in Rats. *By* J. C. WAGNER AND J. W. SKIDMORE 77
Experimental Asbestosis with Four Types of Fibers: Importance of Small Particles. *By* P. F. HOLT, J. MILLS AND D. K. YOUNG 87
Electron-Microscope Studies of Asbestosis in Man and Animals. *By* J. M. G. DAVIS 98
Rheumatoid Factor in Serum of Individuals Exposed to Asbestos. *By* B. PERNIS, E. C. VIGLIANI AND I. J. SELIKOFF 112
Discussion 121

SECTION III. HUMAN EXPOSURE TO ASBESTOS: INDUSTRIAL POPULATIONS

Asbestosis in Great Britain. *By* J. C. MCVITTIE 128
The Occurrence of Asbestosis Among Insulation Workers in the United States. *By* I. J. SELIKOFF, J. CHURG AND E. C. HAMMOND 139
Mortality Among Asbestos Products Workers in the United States. *By* PHILIP E. ENTERLINE 156
Secular Changes in Asbestosis in an Asbestos Factory. *By* W. J. SMITHER 166
Discussion 182

*This series of papers is the result of a conference entitled *Biological Effects of Asbestos* held by The New York Academy of Sciences on October 19, 20, and 21, 1964 and supported in part by grant No. OH-00192-01 from the National Institutes of Health, Bethesda, Md.

ASARCO ALV 0006115

SECTION IV. HUMAN EXPOSURE TO ASBESTOS: COMMUNITY STUDIES

Occupational and Nonoccupational Exposures to Asbestos. *By* W. C. HUEPER 184

Asbestos and the Urban Dweller. *By* J. G. THOMSON 196

Asbestosis in South Africa—Certain Geographical and Environmental Considerations. *By* G. K. SLUIS-CREMER 215

Pleural Plaques and Asbestos: Further Observations on Endemic and Other Nonoccupational Asbestosis. *By* RAIMO KIVILUOTO 235

Observations on Atmospheric Air Pollution Caused by Asbestos. *By* ARVO LAAMANEN, LEO NORO AND V. RAUNIO 240

Discussion opened by G. W. H. SCHEPERS 246

SECTION V. HUMAN EXPOSURE TO ASBESTOS: DUST CONTROLS AND STANDARDS

The Inhalation of Fibrous Dusts. *By* V. TIMBRELL 255

A Comparison of Impinger and Membrane Filter Techniques for Evaluating Air Samples in Asbestos Plants. *By* HOWARD E. AYER, JEREMIAH R. LYNCH AND JULIUS H. FANNEY 274

Developments in Dust Sampling and Counting Techniques in the Asbestos Industry. *By* S. HOLMES 288

Dust Measurement and Monitoring in the Asbestos Industry. *By* C. G. ADDINGLEY 298

Measurement of Airborne Asbestos Dust by Instruments Measuring Different Parameters. *By* S. A. ROACH 306

Present Threshold Limit Value in the U.S.A. for Asbestos Dust: A Critique. *By* E. L. SCHALL 316

Economics of Dust Control. *By* D. W. HILLS 322

Discussion 335

SECTION VI. CLINICAL STUDIES OF PULMONARY ASBESTOSIS

Radiological Classification of Pulmonary Asbestosis. *By* H. BOHLIG 338

The Occurrence of Pleural Calcification Among Asbestos Insulation Workers. *By* IRVING J. SELIKOFF 351

Differential Diagnosis in the Pathology of Asbestosis. *By* J. GOUGH 368

Radiological and Pathological Correlations in Asbestosis in the Republic of South Africa and the United Kingdom. I. A Proposed Radiological Classification of Asbestosis. *By* G. K. SLUIS-CREMER AND C. P. THERON 373

II. A Preliminary Study of Observer Variation in the Classification of Radiographs of Asbestos-Exposed Workers and the Relation of Pathology and X-Ray Appearances. *By* A. CAPLAN, J. C. GILSON, K. F. W. HINSON, J. C. MCVITTIE AND J. C. WAGNER 379

Discussion opened by P. CARTIER 387

Pulmonary Function in Asbestosis: Serial Tests in a Long-Term Prospective Study. *By* MORTIMER E. BADER, RICHARD A. BADER, ALVIN S. TIERSTEIN AND IRVING J. SELIKOFF 391

Routine Lung Function Studies on 830 Employees in an Asbestos Processing Factory. *By* ROSS HUNT 406

The Discriminant Value of Pulmonary Function Tests in Asbestosis. *By* M. L. THOMSON, ANNE-MARIE PELZER AND W. J. SMITHER 421

Discussion opened by J. L. WHITTENBERGER 437

SECTION VII. ASBESTOS AND NEOPLASIA: EXPERIMENTAL

Studies of Carcinogenesis of Asbestos Fibers and Their Natural Oils. *By* J. S. HARINGTON AND F. J. C. ROE 439

Copyright, 1965, by The New York Academy of Sciences. All rights reserved. Except for brief quotations by reviewers, reproduction of this publication in whole or in part by any means whatever is strictly prohibited without written permission from the publisher.

ASARCO ALV 0006116

DIES
IUEPER 184
..... 196
Consid-
..... 215
l Other
..... 235
y ARVO
..... 240
..... 246
STANDARDS
..... 255
ting Air
LYNCH
..... 274
asbestos
..... 288
C. G.
..... 298
Different
..... 306
Critique.
..... 316
... 2
..... 35
s
..... 338
Vorkers.
..... 351
..... 368
ublic of
Classifi-
..... 373
ation of
athology
HINSON,
..... 379
..... 387
spective
ERSTEIN
..... 391
ocessing
..... 406
By M. L.
..... 421
..... 437

By J. S.
..... 439

erved. Except
or in part by
the publisher.

Preparation of Asbestos Fibers for Experimental Use. *By* M. S. BADOLLET AND WILLIAM A. GANTT 451

Tests for Carcinogenicity of Asbestos. *By* WM. E. SMITH, LLONAS MILLER, R. E. ELSASSER AND D. D. HUBERT 456

Tests for Effect of Asbestos on Benzo[a]Pyrene Carcinogenisis in the Respiratory Tract. *By* LLONAS MILLER, WM. E. SMITH AND STEVEN W. BERLINER 489

Asbestos-Induced Tumors in White Leghorn Fowls. *By* P. R. PEACOCK AND ANDREE PEACOCK 501

Discussion 504

SECTION VIII. ASBESTOS AND NEOPLASIA: EPIDEMIOLOGY

Asbestosis and Primary Intrathoracic Neoplasms. *By* WILLIAM D. BUCHANAN 507

Neoplasia Among Insulation Workers in the United States with Special Reference to Intra-abdominal Neoplasia. *By* E. C. HAMMOND, I. J. SELIKOFF AND J. CHURG 519

Cohort Analysis of Changes in Incidence of Bronchial Carcinoma in a Textile Asbestos Factory. *By* J. F. KNOX, R. S. DOLL AND I. D. HILL 526

Pulmonary Neoplasia Among Dresden Asbestos Workers. *By* G. JACOB AND M. ANSPACH 536

Relationship Between Exposure to Asbestos and Pleural Malignancy in Belfast. *By* P. C. ELMES AND O. L. WADE 549

Association of Pulmonary Tumors with Asbestosis in Piedmont and Lombardy. *By* ENRICO C. VIGLIANI, GIACOMO MOTTURA AND PIETRO MARANZANA 558

Epidemiology of Diffuse Mesothelial Tumors: Evidence of an Association from Studies in South Africa and the United Kingdom. *By* J. C. WAGNER 575

Epidemiology of Mesothelial Tumors in the London Area. *By* MURIEL L. NEWHOUSE AND HILDA THOMPSON 579

Discussion opened by T. F. MANCUSO 589

SECTION IX. ASBESTOS AND NEOPLASIA: DIFFUSE MESOTHELIAL TUMORS

Criteria for Diagnosis of Diffuse Mesothelial Tumors. *By* W. T. E. MCCAUGHEY 603

Histological Characteristics of Mesothelioma Associated with Asbestos. *By* J. CHURG, S. H. ROSEN AND S. MOOLTEN 614

Mesotheliomatous Tumors in South Africa: Pathology and Experimental Pathology. *By* IAN WEBSTER 623

A Biopsy Series of Mesotheliomata, and Attempts to Identify Asbestos Within Some of the Tumors. *By* D. O'B. HOURIHANE 647

Mesothelial Tumors and Exposure to Asbestos Dust. *By* W. GLYN OWEN 674

Discussion opened by A. PURDY STOUT 680

SECTION X. PROBLEMS AND PERSPECTIVES

Trends in the Health of the Asbestos Worker. *By* KENNETH W. SMITH 685

The Sequelae of Exposure to Asbestos Dust. *By* J. C. WAGNER 691

Problems and Perspectives: The Changing Hazards of Exposure to Asbestos. *By* J. C. GILSON 696

Appendix 1. Report and Recommendations of the Working Group on Asbestos and Cancer 706

Appendix 2. Dust Diseases and Workmen's Compensation 722

Appendix 3. Statistical Tables—Asbestos 745

ASARCO ALV 0006117

VF ASBESTOS

ANNALS OF THE NEW YORK ACADEMY OF SCIENCES

VOLUME 132, ART. 1 PAGES 1-766

BIOLOGICAL EFFECTS OF ASBESTOS

Conference Cochairmen

I. J. SELIKOFF J. CHURG

AUTHORS

C. G. ADDINGLEY, M. ANSPACH, H. E. AYER, M. E. BADER, R. A. BADER, M. S. BADOLLET, C. BERKLEY, S. W. BERLINER, H. BOHLIG, W. D. BUCHANAN, A. CAPLAN, J. CHURG, J. M. G. DAVIS, R. S. DOLL, P. C. ELMES, R. E. ELSASSER, P. E. ENTERLINE, J. H. FANNEY, W. A. GANTT, R. GAZE, J. C. GILSON, J. GOUGH, E. C. HAMMOND, J. S. HARINGTON, N. W. HENDRY, I. D. HILL, D. W. HILLS, K. F. W. HINSON, S. HOLMES, P. F. HOLT, D. O'B. HOURIHANE, D. D. HUBERT, W. C. HUEPER, R. HUNT, G. JACOB, R. KIVILUOTO, J. F. KNOX, A. LAAMANEN, J. R. LYNCH, W. T. E. MCCAUGHEY, J. C. MCVITTIE, P. MARANZANA, L. MILLER, J. MILLS, E. T. MINER, S. MOOLTEN, G. MOTTURA, G. NAGELSCHMIDT, M. L. NEWHOUSE, L. NORO, W. G. OWEN, A. PEACOCK, P. R. PEACOCK, A. M. PELZER, B. PERNIS, V. RAUNIO, S. A. ROACH, F. J. C. ROE, S. H. ROSEN, E. L. SCHALL, I. J. SELIKOFF, J. W. SKIDMORE, G. K. SLUIS-CREMER, K. W. SMITH, W. E. SMITH, W. J. SMITHER, C. P. THERON, J. G. THOMSON, M. L. THOMSON, H. THOMPSON, A. S. TIERSTEIN, V. TIMBRELL, E. C. VIGLIANI, O. L. WADE, J. C. WAGNER, I. WEBSTER, D. K. YOUNG

Editor

HAROLD E. WHIPPLE

NEW YORK

PUBLISHED BY THE ACADEMY

December 31, 1965

ASARCO ALV 0006118